SAT HDR GOES TRANSMITTER
INSTRUCTION MANUAL

REVISION: 12/01

COPYRIGHT (c) 2000-2001 CAMPBELL SCIENTIFIC, INC.

Warranty and Assistance

The **SAT HDR GOES TRANSMITTER** is warranted by CAMPBELL SCIENTIFIC, INC. to be free from defects in materials and workmanship under normal use and service for thirty-six (36) months from date of shipment unless specified otherwise. Batteries have no warranty. CAMPBELL SCIENTIFIC, INC.'s obligation under this warranty is limited to repairing or replacing (at CAMPBELL SCIENTIFIC, INC.'s option) defective products. The customer shall assume all costs of removing, reinstalling, and shipping defective products to CAMPBELL SCIENTIFIC, INC. CAMPBELL SCIENTIFIC, INC. will return such products by surface carrier prepaid. This warranty shall not apply to any CAMPBELL SCIENTIFIC, INC. products which have been subjected to modification, misuse, neglect, accidents of nature, or shipping damage. This warranty is in lieu of all other warranties, expressed or implied, including warranties of merchantability or fitness for a particular purpose. CAMPBELL SCIENTIFIC, INC. is not liable for special, indirect, incidental, or consequential damages.

Products may not be returned without prior authorization. To obtain a Returned Materials Authorization (RMA), contact CAMPBELL SCIENTIFIC, INC., phone (435) 753-2342. After an applications engineer determines the nature of the problem, an RMA number will be issued. Please write this number clearly on the outside of the shipping container. CAMPBELL SCIENTIFIC's shipping address is:

CAMPBELL SCIENTIFIC, INC.
RMA#_____
815 West 1800 North
Logan, Utah 84321-1784

CAMPBELL SCIENTIFIC, INC. does not accept collect calls.

Non-warranty products returned for repair should be accompanied by a purchase order to cover the repair.

CAMPBELL SCIENTIFIC, INC.

815 W. 1800 N.
Logan, UT 84321-1784
USA
Phone (435) 753-2342
FAX (435) 750-9540
www.campbellsci.com

Campbell Scientific Canada Corp.
11564 -149th Street
Edmonton, Alberta T5M 1W7
CANADA
Phone (780) 454-2505
FAX (780) 454-2655

Campbell Scientific Ltd.
Campbell Park
80 Hathern Road
Shepshed, Loughborough
LE12 9GX, U.K.
Phone +44 (0) 1509 601141
FAX +44 (0) 1509 601091

SAT HDR GOES Transmitter
Table of Contents

1. Introduction 1

2. GOES System 2

2.1 Orbit 2
2.2 NESDIS and Transmit-Windows 2
2.3 Data Retrieval 2

3. SAT HDR GOES Functions 3

3.1 LED Function 3
3.2 Status Switch 4
3.3 Communication Ports 4
3.3.1 Configuration Port 4
3.3.2 CS I/O Port 4
3.3.3 Auxiliary Port 5
3.3.4 SDI-12 Serial Port 5
3.4 RF Connectors 5
3.4.1 RF Transmission Connector 5
3.4.2 GPS Receiver Connector 5
3.5 Power Connector 6

4. DCPComm 8

4.1 Install DCPComm 8
4.2 Load and Edit the Configuration File 8
4.3 Making Edits 9
4.3.1 Platform ID 9
4.3.2 Mode 9
4.3.3 Message Window 9
4.3.4 Minimum Supply Voltage 9
4.3.5 Timed Configuration 9
4.3.6 Timed Channel 9
4.3.7 Baud Rate 10
4.3.8 Interleaver 10
4.3.9 Random Configuration 10
4.3.10 GPS Fix Time Out 10
4.3.11 Communication Port Type 11
4.3.12 Serial Time Out 11
4.3.13 SDI-12 Settings 11
4.3.14 Debug 11
4.4 Transfer the Configuration Information to the SAT HDR GOES 11
4.5 Using DCPComm for SAT HDR GOES Setup and Testing 12
4.5.1 Terminal Window 12
4.5.2 Write Data to Self-timed or Random Buffer 12
4.5.3 Read Data from SAT HDR GOES 12
4.6 SDI-12 Transparent Mode 13

5. Programming the Datalogger 13

5.1 General Programming Information 13
5.1.1 Deciding How Much Data will be Transmitted and When 14
5.1.2 Deciding What Data Format to Use 14
5.1.3 Managing Data, Writing More Data Than Will Be Transmitted .. 15
5.2 Sending Data to the Transmitter 15
5.2.1 Buffer Control 16
5.2.2 Data Format 16
5.2.3 P126 Result Codes 16
5.3 Read Status and Diagnostic Information from the SAT HDR GOES 18
5.3.1 Program Instruction 127 18
5.3.2 P127 Status Commands Explained 18
5.4 Programming Examples 22
5.4.1 Using P126 22

6. Field Installation 24

6.1 Field Site Requirements 24
6.2 Transmission Antenna 25
6.3 GPS Antenna 25
6.3.1 How the GPS Signal is Acquired and Used 25
6.3.2 GPS Antenna Location 25

Appendices

A. Information on Eligibility and Getting Onto the GOES System A-1

A.1 Eligibility A-1
A.2 Acquiring Permission A-1

B. Data Conversion Computer Program B-1

C. Antenna Orientation Computer Program C-1

D. RAWS-7 Data Format D-1

D.1 Introduction D-1
D.2 Format D-1
D.3 Programming the Datalogger for RAWS-7 Format D-1
D.4 RAWS-7 Sample Data D-2
D.5 Writing additional data values beyond the RAWS-7 ..... D-3

E. GOES DCS Transmit Frequencies E-1

F. High Resolution 18-Bit Binary Format F-1

G. GOES/Radio Set Certification G-1

Figures

2-1. Major Components of the GOES/DCP System 3
3-1. SAT HDR GOES Label 7
3-2. SAT HDR GOES Connectors 7
3-3. DCP Enclosure 8

Tables

5.2-1. P126 Result Codes 17
5.2-2. P127 Result Codes 17
5.3-1. P127 Command 0: Read Time 19
5.3-2. P127 Command 1: Read Status 19
5.3-3. P127 Command 2: Read Last Message Status 19
5.3-4. P127 Command 3: Initiate Random Transmission 20
5.3-5. P127 Command 4: Read SAT HDR GOES Error Registers 20
5.3-6. Error Codes 21
5.3-7. P127 Command 5: Clear Error Registers 21
5.3-8. P127 Command 6: Force On-line Mode 22
D-1. RAWS-7 Output D-2

SAT HDR GOES Transmitter

1. Introduction

The SAT HDR GOES transmitter supports one-way communication, via satellite, from a Campbell Scientific datalogger to a ground receiving station. Satellite telemetry offers a convenient telecommunication alternative for field stations where phone lines or RF systems are impractical.

The SAT HDR GOES utilizes non-volatile memory to store configuration information, such as platform ID, transmission baud rate, channel number, scheduled transmission time, offset time and message window length. The SAT HDR GOES also has two, 16 K byte RAM buffers to store data—one buffer for schedule transmissions and one buffer for random transmissions. The clock is maintained with a GPS receiver.

SAT HDR GOES supports the following certification standards:

- 300/1200 BPS DCPRS Certification Standard version 1.0b- March 2000
- 100 BPS Self-timed DCPRS Certification Standard - November 1981
- 100 BPS Random DCPRS Certification Standard - November 1981
- SDI-12, A Serial-Digital Interface Standard for Microprocessor-based Sensors version 1.2 - October 21, 1996.

High data rates are supported. The SAT HDR GOES includes 4 serial communication ports:

- CS I/O for Campbell dataloggers.
- Config is used with a computer to setup and configure the SAT HDR GOES.
- AUX is an RS232 port used with non-Campbell Scientific dataloggers.
- SDI-12 is used where only SDI-12 sensors are used and a datalogger is not needed.

The CS I/O port is a Campbell Scientific Synchronous Device for Communication (SDC) port.

NOTE The 21X and CR7 dataloggers do not support SDC.

The SAT HDR GOES is manufactured for Campbell Scientific, Inc. by Seimac, Ltd., Nova Scotia, Canada.

Specifications:

On-board memory:	Non-volatile flash for setup parameters. 16 Kbytes for self-timed data and 15 Kbytes for random data
Power requirements:	9.6 to 16 VDC, 1 mA quiescent, 350 mA during GPS fix and less than 4 Amps during transmission
Transmit power:	7.9 watts for 100 and 300 bps, 15.9 watts for 1200 bps.
Environmental:	-40° C to 50° C; 0 to 99% RH, non-condensing
Dimensions:	8.2” x 5.5” x 1.5”; 9.0” x 5.5” x 1.5” with connectors
Weight:	< 2 pounds

2. GOES System

2.1 Orbit

The SAT HDR GOES transmitter sends data via Geostationary Operational Environmental Satellites (GOES). GOES satellites have orbits that coincide with the Earth's rotation, allowing each satellite to remain above a specific region. This allows a user to point the GOES antenna at a fixed position in the sky.

There are two satellites, GOES East and GOES West. GOES East is located at 75° West longitude and GOES West is located 135° West longitude. Both satellites are located over the equator. Within the United States, odd numbered channels are assigned to GOES East. Only even numbered channels are assigned to GOES West. Channels used outside the United States are assigned to either spacecraft.

2.2 NESDIS and Transmit–Windows

GOES is managed by the National Environmental Satellite Data Information Service (NESDIS). NESDIS assigns the platform ID, uplink channel number, and self-timed or random transmit time windows. Self-timed windows allow data transmission only during a predetermined time frame (typically one minute every three or four hours). The self-timed data is erased from the transmitter's buffer after each transmission. Random windows are for critical applications (e.g., flood reporting) and allow transmission immediately after a threshold has been exceeded. The transmission is then randomly repeated to ensure it is received. A combination of self-timed and random windows can be executed by the SAT HDR GOES.

2.3 Data Retrieval

Data retrieval via the SAT HDR GOES and the GOES system is illustrated in Figure 2-1. The User Interface Manual, provided by NOAA/ NESDIS, describes the process of retrieving the data from the NESDIS ground station. The data are in the form of 3-byte ASCII (see Appendix B for a computer program that converts the data to decimal). You can also retrieve data directly

from the NESDIS ground station via the DOMSAT satellite downlink. DOMSAT is only practical for organizations with many GOES users; contact NESDIS for more information (see Appendix A).

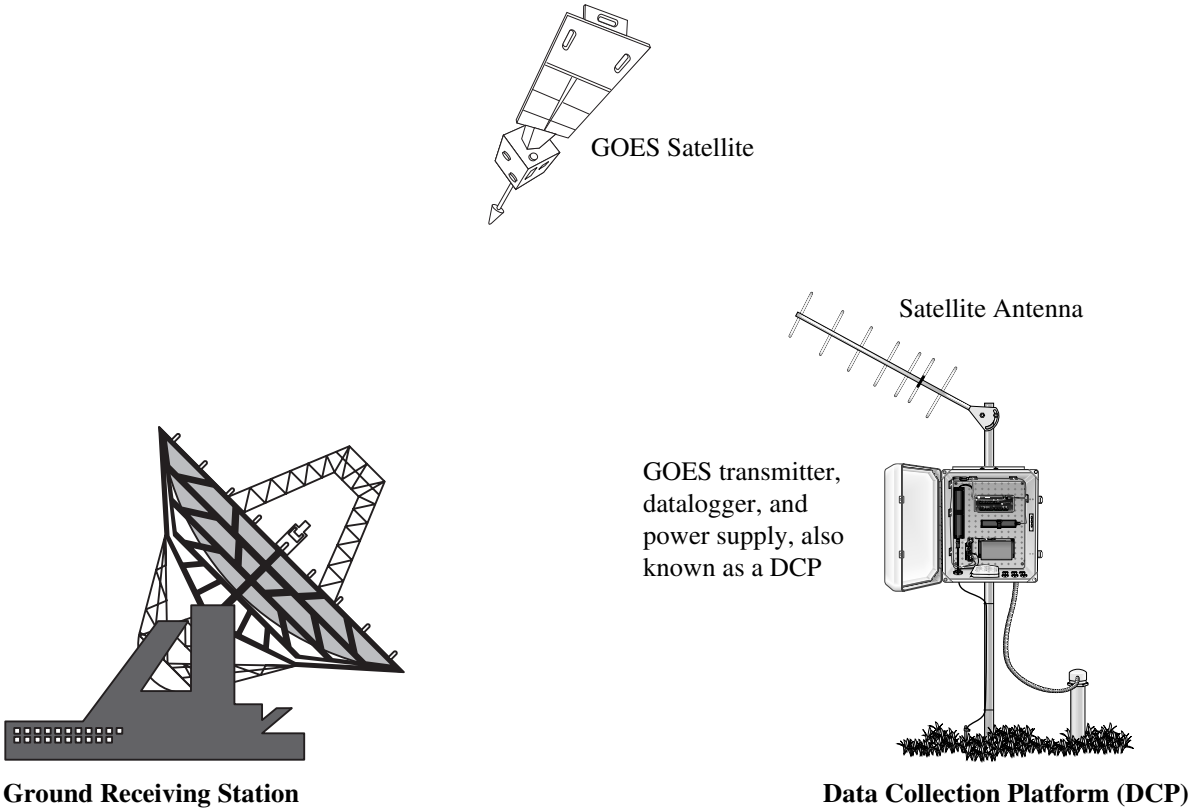

FIGURE 2-1. Major Components of the GOES/DCP System

3. SAT HDR GOES Functions

3.1 LED Function

The SAT HDR GOES has one, tri-color LED. The color of the LED and the state: on, flashing or off, indicates the state of the SAT HDR GOES transmitter.

When power is first applied to the SAT HDR GOES, the LED will cycle through the three colors: red, green and yellow. The three colors are displayed while the SAT HDR GOES is performing internal diagnostics.

After power up the LED will show the current state of the SAT HDR GOES. Flashing red indicates the fail safe mode has been tripped. Solid red indicates the transmitter is currently transmitting.

Flashing yellow indicates a fault has been recorded. This could be due to a low power supply or a GPS fix failure. Flashing yellow should be investigated, but does not indicate a definite problem. Flashing yellow indicates a past failure,

the failure condition may not still exist. Check the error register (P127 command 4) for details.

Solid green indicates the GPS receiver is currently obtaining a GPS fix.

LED off is the default low power state. The LED is turned off when the transmitter is functioning normally and is not transmitting or acquiring a GPS fix.

3.2 Status Switch

The status switch has two purposes. Depress the switch for less than four seconds and the SAT HDR GOES will wake up and display the current status of the SAT HDR GOES by flashing the LED. The LED will flash for ten seconds. Green indicates all systems good. Yellow indicates a past fault condition, same as a flashing yellow after power up. Flashing red indicates the fail safe has been tripped.

If the status switch is depressed for four seconds or more, the SAT HDR GOES will reset. This will reset the fail safe circuit. The reset requires 60 seconds. Configuration information is not lost. Data buffers are erased.

3.3 Communication Ports

3.3.1 Configuration Port

The Configuration port or Config port is an RS232 port utilizing a DB9 female connector configured as DCE. Only three pins are used, transmit on pin two, receive on pin three and ground on pin five. Transmit is an output and receive is an input to the SAT HDR GOES.

The configuration port is used in conjunction with a PC and the 32 bit windows compatible software, DCPComm. DCPComm software is used to transmit the configuration information from the computer to the SAT HDR GOES transmitter. DCPComm communicates with the SAT HDR GOES through the Config port.

3.3.2 CS I/O Port

The CS I/O port is a Campbell Scientific Synchronous Device for Communication (SDC) port. The CS I/O port is specifically designed to work with Campbell Scientific SDC capable dataloggers. The CS I/O port is used by Campbell Scientific dataloggers to transfer data from the datalogger to the SAT HDR GOES transmitter. The CS I/O SDC port allows other SDC devices and one modem enabled device to be connected to the same port at the same time. Only one device can be active at a time. This SDC port will allow the SAT HDR GOES transmitter, the RF95A RF modem and a phone modem to be connected to the CSI datalogger serial port all at the same time. The CS I/O port is a DB9 male, voltage levels are TTL, pin out is:

1, 3, 5, 8 are not used
2 = Ground
4 = RXD (output)
6 = SDE (input)
7 = CLK (input)
9 = TXD (input)

3.3.3 Auxiliary Port

The Auxiliary port is an RS232 port utilizing a DB9 female connector. The Auxiliary port is used by non-Campbell Scientific dataloggers to transfer data from the datalogger to the SAT HDR GOES transmitter. Only three pins are used: two is TXD (output), three is RXD (input) and five is ground. The Auxiliary serial port allows communications with dataloggers that are not SDC compatible.

3.3.4 SDI-12 Serial Port

The SDI-12 serial port is used by the SAT HDR GOES only when a datalogger is not used. Under most operating conditions, the datalogger is responsible for the SDI-12 functions.

3.4 RF Connectors

3.4.1 RF Transmission Connector

The SAT HDR GOES utilizes the type N female connector for RF power out. This connector must have a proper antenna connection before transmission occurs. Failure to use a properly matched antenna cable and antenna may cause permanent damage to the RF amplifiers. The nominal impedance is 50 ohms, the frequency range is approximately 400 to 403 MHz. RF power out is a nominal 8 or 15 watts. At 100 and 300 BPS transmission rates, the nominal EIRP is 48 dBm with an 11 dbic gain antenna. At 1200 BPS, the nominal EIRP is 52 dBm.

3.4.2 GPS Receiver Connector

The GPS connector is an input to the SAT HDR GOES. Operation without an antenna connected will not cause damage, but the transmitter will not transmit without a valid GPS fix. The GPS connector is an OSX jack. The GPS receiver uses an active 3.3 V, 13 dB gain ceramic patch antenna.

The SAT HDR GOES transmitter uses the GPS receiver for two functions. The precise GPS time is used to ensure scheduled transmissions occur at the proper time. The one-second GPS synchronization pulse is used to ensure a precise, drift-free carrier frequency. See Section 6.3 for more information regarding GPS and GPS antenna placement.

3.5 Power Connector

The SAT HDR GOES power connector has two pins: ground and 12 V. The input power requirement is 9.6 to 16 VDC at 4 amps. The power connector uses the same power plug as the CR10X datalogger. Because the SAT HDR GOES can use up to 4 amps, the power must be connected directly to the battery. The CH12R charger/regulator limits current to 3 amps. The CH12R has two connections that are directly connected to the battery. One is labeled "int" the other "ext", connect the battery to one and the SAT HDR GOES to the other.

The SAT HDR GOES has four different operational states. The current use in each of these states is less than or equal to the values listed below:

Inactive or Quiescent:	1 mA
Active:	100 mA
Acquiring GPS fix:	350 mA, observed 160 mA.
Transmit:	4000 mA, observed 1900 max during 100 baud

With the potential for a 4000 mA current drain, the voltage drop along the battery power leads must be considered. The battery power leads are both wires that run from the battery to the power input connectors of the SAT HDR GOES. To calculate the voltage drop along the power leads, we must know the resistance of the wire and the length of the wire. Usually the resistance of the wire is listed as ohms per 1000 feet. As an example, a 24 AWG wire used by CSI has a resistance of 23 ohms per 1000 feet. The length of the wire is the distance the wire travels from the battery to the transmitter multiplied by two. You must consider the current travels from the battery, to the transmitter and back to the battery.

The SAT HDR GOES will operate with a battery voltage range from 9.6 V to 16 V. A fully charged lead acid battery will have a voltage of about 12.5 V. If the battery is fully charged, a 3 V drop along the battery leads will stop the transmitter from transmitting. At 4 amps, 3 V will be dropped with 0.75 ohms of resistance. Using the 24 AWG wire with 23 ohms resistance per 1000 ft, 32 feet of wire (battery power leads 16 ft long) will prevent transmission. A reliable system that will transmit without a perfect battery voltage will minimize voltage drop along the battery power leads. To minimize voltage drop, keep the battery power leads short. A five-foot power lead is a long power lead. If you must have a longer lead, use heavy wire. For power leads less than ten feet but more than five feet, use no smaller than 18 AWG.

FIGURE 3-1. SAT HDR GOES Label

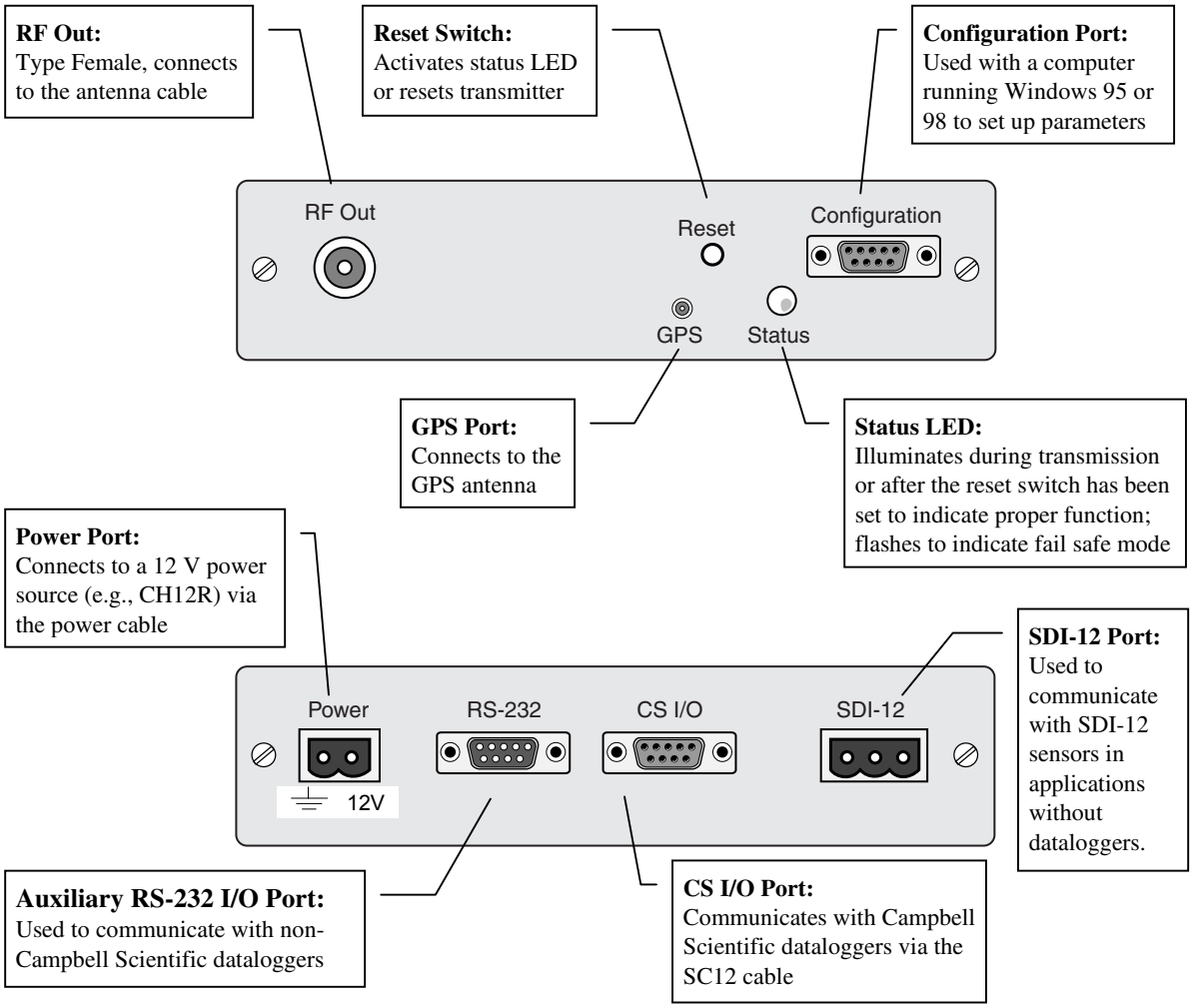

FIGURE 3-2. SAT HDR GOES Connectors

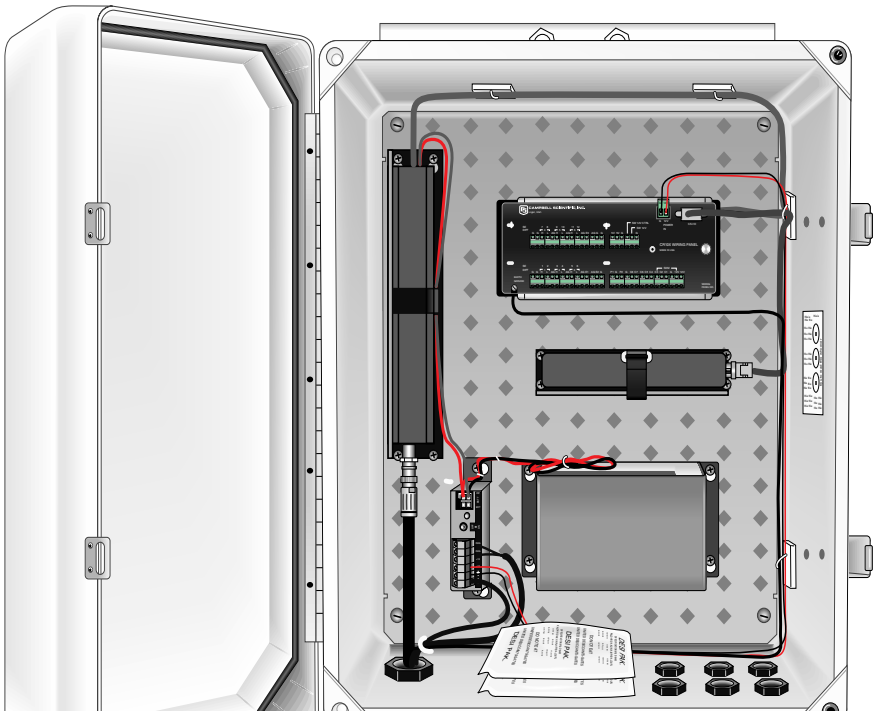

FIGURE 3-3. DCP Enclosure

4. DCPComm

Certain information required by NESDIS is unique to each DCP. This setup information includes: platform ID, transmission baud rate, channel number, scheduled transmission time, offset time, and message window length. The SAT HDR GOES has non-volatile memory to store the setup information. The setup information is entered in the SAT HDR GOES with a computer running DCPComm software. DCPComm software is a 32-bit windows application.

4.1 Install DCPComm

Follow instructions on disk.

4.2 Load and Edit the Configuration File

The configuration file contains information such as NESIDS ID number, transmission window size and start time, channel number, etc. A unique configuration file can be saved for each DCP in service.

To load and edit the configuration file, start DCPComm.exe. From the main menu select file/open. Open file GOESTerminalV2.cfg. GOESTerminalV2.cfg is the default configuration file. Using the “Save As” option from the file menu, save GOESTerminalV2.cfg with a new name. It may be helpful to select a name that relates to the DCP site.

4.3 Making Edits

Edits are made in the Value column. Only white fields may be changed. Gray fields are set at the factory.

4.3.1 Platform ID

Starting from the top of the configuration table, select the "Value" field for NESDIS ID (Platform ID) number. Type in your NESDIS assigned id number. This is an 8 digit hex number. Valid characters are 0-9, A, B, C, D, E and F. The upper case H designates a hex value and is not part of the ID. Example: 4F3E2D1E

4.3.2 Mode

Moving down the table, the next field to edit is Mode (ASCII = 2, Pseudo = 3). The mode is the data type. If sending ASCII, select a 2. If sending a binary format, select 3. The mode function sends a marker bit in the data header. NESDIS DAPS-2 can use this bit to determine the data format, and decode the data if binary (pseudo). Except for the marker bit, there is no difference between selecting ASCII or pseudo.

4.3.3 Message Window

The message window is the length of the assigned self-timed transmission window. Units are in seconds, valid entries are 1 - 120.

4.3.4 Minimum Supply Voltage

The minimum supply voltage is the power supply voltage where the transmitter will stop transmitting. The default value of 96 (9.6 volts) is the lowest voltage level where the transmitter can function. Values greater than 96 can be used to prevent the transmitter from completely drawing down a week power supply. Generally this field should be left at the default value.

4.3.5 Timed Configuration

For Self-timed transmissions, four values must be entered. The interval is the time between self-timed transmission. For a 3 hour interval, select 0 days, 3 hours, 0 minutes and 0 seconds. Generally the interval will be in units of whole hours, therefore minutes and seconds will be zero.

The offset is the time after midnight of the first transmission for the day. Sometimes the offset is called the start time. Generally the offset will include hours and minutes. Seconds is used to split whole minutes into partial minutes. When the offset includes seconds, the message window is usually less than 60 seconds.

4.3.6 Timed Channel

The Timed Channel is the NESDIS assigned self-timed transmission channel. When using 100 and 300 baud, valid channel numbers are between 0 and 267.

When using 1200 baud, valid channel numbers are 0 to 133 where 100 to 133 are international channels. For 1200 baud channels, the formal channel designation is the channel number followed by the letter A, for example: 99A. For clarification, see appendix E. If your assigned channel number does not include the letter A, either you don't have a 1200 baud channel assignment or you've been given a 100/300 channel number. In DCPComm, don't enter the letter A. When 0 is entered, self-timed transmissions are disabled.

4.3.7 Baud Rate

The baud rate must match your NESDIS channel assignment. The high data rate includes both 300 and 1200 baud. Valid entries are 1 for 100 bps, 2 for 300 bps and 3 for 1200 bps. You can use different baud rates for self-timed and random channel assignments.

4.3.8 Interleaver

The interleaver only applies to high data rate transmissions. When using 300 or 1200 baud, the interleaver will provide some error correction to the data transmission. When the interleaver is used, the number of bytes transmitted will increase when compared with a equal amount of data transmitted with the interleaver off.

4.3.9 Random Configuration

The random interval is the average time between random transmissions. When the SAT HDR GOES receives data in the random data buffer, a random transmission is scheduled. After the first transmission, the transmitter will select a pseudo random time somewhere within the random interval. This process is repeated until the datalogger removes the data from the random buffer.

The random channel is the NESDIS assigned random transmission channel. When using 100 and 300 baud, valid channel numbers are 0 to 266. When using 1200 baud, valid channel numbers are 0 to 133 where 100 to 133 are international channels. For 1200 baud channels, the formal channel designation is the channel number followed by the letter A, for example: 99A. For clarification, see appendix E. If your assigned channel number does not include the letter A, either you don't have a 1200 baud channel assignment or you've been given a 100/300 channel number. In DCPComm, don't enter the letter A. When 0 is entered, random transmissions are disabled.

4.3.10 GPS Fix Time Out

The GPS receiver has 2 settings. The "fix time out" and "first fix time out". The difference is basically the same as a warm start verses and cold start. The SAT HDR GOES usually will require a valid GPS fix for transmission. See section 6.3 for details on GPS operation. The first fix requires more time because GPS receiver does not have satellite almanac data stored. The default settings of 300 and 1200 seconds generally work fine. After the SAT HDR GEOS has a valid GPS fix, the GPS receiver is powered down. A GPS fix time longer than necessary does not increase battery drain if the GPS receiver is able to read the GPS satellite signal.

4.3.11 Communication Port Type

The communication port type sets the active port on the SAT HDR GOES. The CSI port is used with Campbell Scientific dataloggers (CR10X, CR510, CR23X). Only one port can be selected at a time. The SDI-12 port can not be used in conjunction with a datalogger.

4.3.12 Serial Time Out

The serial time out is set long enough for all data to be copied from the datalogger to the transmitter before the time out expires. The default of 20 seconds should be plenty. The wait before sleep field should be set to 5.

4.3.13 SDI-12 Settings

SDI-12 setup is only valid when the SDI-12 serial port is the active port. There is one sample interval and one offset which applies to all sensors. The sample interval is how often the SAT HDR GOES will quarry each sensor. The offset is the time after midnight of the first sample. The SAT HDR GOES does not wait for midnight to start the offset. The sensors are sampled in order.

Each sensor has two fields. The SDI-12 sensor address and the command the SAT HDR GOES will issue to the SDI-12 sensor. Valid SDI-12 addresses are 0 through 9. When the command is NNN, the sensor is not sampled. Concurrent measurements are supported.

4.3.14 Debug

When debug is on, status messages are sent out the configuration port. The default state is off.

When finished editing the configuration file, save the edits.

4.4 Transfer the Configuration Information to the SAT HDR GOES

Edit and save the configuration file before it is transferred to the SAT HDR GOES. See previous section.

Open DCPComm.exe, select “file” then “com port settings”. Select the appropriate com port for your computer, select 9600 baud.

Open the configuration file you wish to send. From the main menu, select “DCP Communications/Start User Interface”. You will receive a message about user interface mode started. From the main menu, select “DCP Communications/Send Configuration”. Wait for the message regarding configuration sent. From the main menu, select “DCP Communications/Stop User Interface Mode”.

When you exit user interface mode, the transmitter will immediately start a GPS fix. All information from the configuration file is stored in non-volatile

memory. After the configuration file has been received by the SAT HDR GOES, it is ready to be installed in the field.

DCPComm has an option to retrieve the configuration information from a transmitter. When the configuration is retrieved, the information is stored in the current configuration file. All previous information is displaced.

4.5 Using DCPComm for SAT HDR GOES Setup and Testing

4.5.1 Terminal Window

The menu item Terminal has several functions that can be used to interrogate the SAT HDR GOES. To use the terminal window, use a standard serial cable to connect the serial port of the computer to the Configuration port of the SAT HDR GOES. From the main menu select Terminal/Open Terminal Window. When the terminal window is open, DCPComm can be used to send data to the transmitter, read the status, last message status, GPS time, GPS position and error registers.

4.5.2 Write Data to Self-timed or Random Buffer

From the main menu select Terminal/Write String to Buffer. A dialog box will open and allow you to type in a data string and select which buffer the data is written to. To send a file to a buffer, select Terminal/Write File to Buffer. Using the write file option allows you to send the same data many times without having to retype it. Strings sent to the transmitter are scheduled for transmission.

The Start Timed Messages option is used to repeatedly send data to either buffer of the SAT HDR GOES. Timed messages are similar to the Send data command, except the command is repeated until stopped with the Stop Timed Messages Command.

4.5.3 Read Data from SAT HDR GOES

The read commands retrieve information from the SAT HDR GOES and display the information on screen. General status information is available like GPS time and position, transmitter configuration including Platform ID, channel number, baud rate, and when the next message will be transmitted.

4.5.3.1 Read GPS

The Read GPS command returns the GPS time in seconds, latitude, longitude, elevation and magnetic declination.

4.5.3.2 Read Configuration

The Read Configuration command returns the current configuration parameters of the SAT HDR GOES. The Platform ID is displayed with leading zeros eliminated. The Message Window is the number of seconds allocated to the self-timed message window. The baud rate, channel number, interval, offset and interleaver settings are displayed for both self-timed and random

messages. The read configuration command is a useful check to determine if the transmitter has been properly setup before being deployed.

4.5.3.3 Read Last Message Status

The Read Last Message Status command will display information specific to the last message transmitted. A self-timed message is type 0, random is type 1. The forward power should be above 125 for 100 or 300 baud and above 160 for 1200 baud. The reflected power should be about half of the forward power. The supply voltage is loaded.

4.5.3.4 Read Status

The Read Status command will display information specific to the next message to be transmitted. The number of bytes in each buffer and time until transmission is displayed. The fail-safe status will show the number 1 if the fail-safe has tripped. The fail-safe should not trip.

4.5.3.5 Read Error Register

The Read Error Register command will display the number of errors that have occurred since the unit was last reset. The command that caused the error and the error code for the last four errors are displayed. All errors should be investigated. Many times a simple GPS fix error is not a problem, unless the system routinely has trouble acquiring a GPS fix. The SAT HDR GOES requires a regular GPS fix for proper operation.

4.5.3.6 Read GPS Time

The Read Time command will display the time acquired from the GPS receiver. The GPS time is always in GMT.

4.6 SDI-12 Transparent Mode

The menu item SDI-12 can be used for SDI-12 transparent mode. SDI-12 transparent mode is used to manually send commands to SDI-12 sensors. Before using SDI-12 transparent mode, the terminal window must be opened. See section 4.5.1 for details. SDI-12 responses are displayed in the terminal window. See your SDI-12 sensor manual for information regarding SDI-12 commands. When finished with SDI-12 transparent mode, use the Exit Transparent Mode command. After using SDI-12 transparent mode, the SAT HDR GOES will reset.

5. Programming the Datalogger

5.1 General Programming Information

The datalogger is used to measure and record data values. The SAT HDR GOES is used to transmit data over a GOES satellite to a ground receiving station. Program instruction 126 is used to send data from the datalogger to the SAT HDR GOES satellite transmitter. The SAT HDR GOES has two data buffers. The data buffers will hold data until it is time to transmit the data.

Data in the self-timed buffer is erased after transmission. Data in the random buffer must be erased by the datalogger. If there are data in the random buffer, the SAT HDR GOES will continuously schedule and send the data. When properly configured, the SAT HDR GOES will ensure data is transmitted on the correct channel, at the correct baud rate and at the correct time.

The datalogger will interface with the SAT HDR GOES under program control. Two program instructions are used, P126 and P127. P126 is used to send data to a buffer. New data is either added to existing data (append) or overwrites existing data (insert). In overwrite mode, all data in the buffer is erased before new data is written. P127 is used to retrieve information from the SAT HDR GOES. Information regarding GPS time, latitude and longitude can be retrieved and stored in the datalogger. Information regarding the status and past errors can also be retrieved.

Data can be sent to the self-timed buffer 20 seconds before transmit time, otherwise the data will be scheduled for a later transmission. P126 should not be executed during a GPS fix.

5.1.1 Deciding How Much Data will be Transmitted and When

The amount of data that can be transmitted depends on several factors: the transmit window length, the transmit baud rate, and the data format. The transmit window limits the time available for data to be sent. The baud rate determines how fast data is sent. The data format determines how many bytes are required per data point.

The maximum number of data points that can be sent is estimated with this formula:

$$b(a-2)/8c = \text{total number of data points per transmission}$$

Where:

a = Window length in seconds
b = baud rate or Bits/second; i.e., 100, 300, or 1200
c = bytes per data point

Binary data uses 3 bytes per data point.

ASCII data uses 7 bytes per data point.

5.1.2 Deciding What Data Format to Use

The choice of data format effects two areas. First the data format effects how much data can be sent in a single transmission. Binary data formats require 3 bytes per data point. ASCII data formats require 7 bytes per data point. Second, binary data must be decoded after transmission, ASCII does not. The datalogger formats the data before the data is sent to the SAT HDR GOES. The data format is chosen with the P126 program instruction.

The high data rate specification allows the data to be encrypted for transmission. The SAT HDR GOES must know the data format to apply the

encryption. The data format chosen with the P126 instruction must match the data format chosen in the DCPComm configuration file. DCPComm is used to select data encryption. The setting is called the interleaver. Most DCP's will set the interleaver to off.

5.1.3 Managing Data, Writing More Data Than Will Be Transmitted

The datalogger has two data storage areas, Final Storage area 1 (FS1) and Final Storage area 2 (FS2). When data is written to final storage, data is written to the active final storage area. The active final storage area defaults to FS1 when the datalogger starts the program table. Program instruction 80 (P80) is used to set the active final storage area. When P126 executes, all new data in the active final storage area is sent to the transmitter. New data is all data that has been written to the active final storage area since P126 last executed.

Two separate data files can be maintained by managing which final storage area is active when data is written. The amount of data copied to the transmitter and the order of data copied to the transmitter can be controlled by utilizing both final storage areas. If using FS2, datalogger memory must be allocated to FS2. Final storage area 2 memory can be allocated using Edlog or the keypad.

5.2 Sending Data to the Transmitter

Program instruction 126

Transfer Data to HDR GOES

```
1:  Data Transfer to HDR GOES (P126)
  1:   0000        Buffer Control
  2:   0000        Data Format
  3:   0000        Result Code Loc [ _______ ]
```

Parameter1: Buffer Control

0	Append to Self-Timed Buffer
1	Overwrite Self-Timed Buffer
2	Append to Random Buffer
3	Overwrite Random Buffer
9	Clear Random Buffer

Parameter 2: Data Format

0	CSI Floating Point Binary
1	Floating Point ASCII
2	Binary Integer, 18 Bit
3	RAWS 7, Fire Weather
4	Fixed Decimal, ASCII, xxx.x
5	Fixed Decimal, ASCII, xx.xx
6	Fixed Decimal, ASCII, x.xxx
7	Fixed Decimal, ASCII, xxx
8	Fixed Decimal, ASCII, xxxxx

Parameter 3: Input Location for Result Code

1 Input Loc [_____]; see table 5.2

5.2.1 Buffer Control

The first parameter of program instruction 126 (P126) is called buffer control. Buffer control has two purposes: 1) to determine which buffer data is written to, and 2) if the buffer is erased before data is written. The SAT HDR GOES has two independent buffers, one for self-timed transmissions and one for random transmissions. The self-timed buffer is treated differently than the random buffer. After a self-timed transmission, the data is erased from the self-timed buffer. After a random transmission, the data in the random buffer is scheduled to be transmitted again. Random transmissions are repeated at random intervals until P126 is used to "Clear Random Buffer".

5.2.2 Data Format

The second parameter of P126 is used to format the data. The data is formatted as P126 copies data from the datalogger to the transmitter.

CSI floating point binary data requires 3 bytes per data point. Data must be low resolution. Sign and decimal location are maintained. This is an efficient data format.

Floating point ASCII requires 7 bytes per data point. Data must be low resolution. Sign and decimal location are maintained. Data does not need to be converted after transmission. Data points are separated by a comma. This is not an efficient data format, but it is convenient.

Binary, 18 bit, integer data format requires 3 bytes per data point. All data stored in datalogger must be in high resolution. All information right of the decimal place is truncated. Data is transmitted as a signed, two's compliment, 18 bit integer. Precision can be maintained by pre and post processing. This is an efficient data format that requires conversion and post processing. See Appendix F for details.

RAWS 7 and fixed decimal ASCII are used to format data in a specific way. See Appendix D for details.

5.2.3 P126 Result Codes

The third parameter of P126 requires an input location. In the input location, the result of the P126 execution is stored as a result code. The result code can be used to determine if P126 executed successfully. Under most conditions, if P126 was not successful, a second execution of P126 will work.

To better understand the result codes, it is necessary to understand the sequence of communication with the transmitter. Here are the steps:

1) CS I/O is checked to see if serial port is available. If not, return code 6.
2) The transmitter is addressed and should return the STX character within 200 msec. If there is no response from the transmitter, result code is 2. If something other than the STX character is received, result code is 3.
3) The command to select a data buffer is sent (random or self-timed). The transmitter should respond with the ACK (06) character. If something besides the ACK is received, result code is 4. If nothing is received within 500 msec, result code is 5.
4) If the first three steps are successful, the datalogger sends the command to append or overwrite (insert) the data buffer, followed by the data. If the transmitter does not respond with the ACK character within 500 msec, result code is 7. Result code 7 indicates the data was not received by the transmitter. The datalogger cannot resend the data.

The result codes can be utilized to increase the success rate of data transmissions. When the result code is 0, all went well. When the result code is 2-6, P126 did not execute properly, but can still send the data. A result code of 7 indicates P126 did not execute properly and the data probably cannot be sent again.

TABLE 5.2-1. P126 Result Codes

0	Command executed successfully
2	Time out waiting for STX character after SDC addressing
3	Wrong character (not STX) received after SDC Addressing
4	Something other than ACK returned when select data buffer command executed
5	Timed out waiting for an ACK when data buffer command was sent
6	CS I/O port not available, port busy
7	ACK not returned following data append or insert command

TABLE 5.2-2. P127 Result Codes

0	Execution successful
1	Checksum error in response
2	Time out waiting for STX character after addressing
3	Something besides STX received after addressing
4	Received a NAK
5	Timed out while waiting for an ACK
6	CS I/O not available
7	Transmit random message failure, could be no data in random buffer
9	Invalid command code

5.3 Read Status and Diagnostic Information from the SAT HDR GOES

5.3.1 Program Instruction 127

```
1:  HDR GOES Status (P127)
  1:   0000        Status Command
  2:   0000        Result Code Loc [ _____ ]
```

Parameter 1: Status Command

0	Read Time, Uses four Input Locations
1	Read Status, Uses 13 Input Locations
2	Read Last Message Status, Uses 14 Input Locations
3	Transmit Random Message, must be followed by command 6. One Input Location
4	Read Error Register, Uses Ten Input Locations
5	Reset Error Register, One Input Location
6	Return transmitter to online mode, used after command 3, One Input Location

5.3.2 P127 Status Commands Explained

Program instruction 127 (P127) has four basic functions:

1) Datalogger will retrieve information from the SAT HDR GOES transmitter.

2) Datalogger will initiate a test transmission on a random channel.

3) Datalogger will reset the error register of the SAT HDR GOES

4) Return SAT HDR GOES to on-line mode following a forced random transmission.

Parameter 1 allows you to determine what command will be issued to the SAT HDR GOES.

Parameter 2 is the starting input location for the string of information the HDR GOES will return.

Each P127 command returns a string of information. Each command requires a different number of input locations. The first piece of information returned is always the result code of the command. Table 5.2-2 is a list of result codes and what they mean.

P127, Command 0: Read Time

Retrieve the GPS time from the HDR GOES transmitter. The time is Greenwich Mean Time (GMT). A time of 153 hours, 153 minutes, 153 seconds indicates GPS time is not available.

TABLE 5.3-1. P127 Command 0: Read Time

In Loc	Contents
1	Command Result Code
2	Hours (GMT)
3	Minutes
4	Seconds

P127, Command 1: Read Status

Read Status Command provides information specific to the next scheduled or random transmission, including the amount of data in the buffers and power supply voltage.

TABLE 5.3-2. P127 Command 1: Read Status

In Loc	Contents
1	Command Result Code
2	Bytes of data in self-timed buffer
3	Time until next self-timed transmission: Days
4	Time until next self-timed transmission: Hours
5	Time until next self-timed transmission: Minutes
6	Time until next self-timed transmission: Seconds
7	Bytes of data in random buffer
8	Time until next random transmission interval start: Hours
9	Time until next random transmission interval start: Minutes
10	Time until next random transmission interval: Seconds
11	Failsafe, 1 indicates transmitter disabled due to failsafe.
12	Loaded power supply voltage, 1 amp load. (tenths of volts)
13	Average GPS acquisition time (tens of seconds)

P127, Command 2: Read Last Message Status

Returns information specific to the last message transmitted plus the GPS derived Latitude and Longitude.

TABLE 5.3-3. P127 Command 2: Read Last Message Status

In Loc	Contents
1	Command Result Code
2	Message type: Self-timed or Random
3	Size of message in bytes
4	Forward power in tenths of watts
5	Reflected power in tenths of watts
6	Power supply voltage under full load, in tenths of volts
7	GPS acquisition time in tens of seconds
8	Oscillator drift (signed, hundreds of Hz)
9	Latitude degrees
10	Latitude minutes
11	Latitude seconds
12	Longitude degrees
13	Longitude minutes
14	Longitude seconds.

P127, Command 3: Transmit Random Message

Overwrite random buffer with 1 2 3 4 (ASCII)

During GPS acquisition the LED lights green.

During transmission the LED lights red.

TABLE 5.3-4. P127 Command 3: Initiate Random Transmission

In Loc	Contents
1	Result Code

Random message channel and repeat interval must be enabled in the SAT HDR GOES configuration. If random messages have not been enabled, command 3 will fail. If the GPS acquisition fails, the random transmission will fail. Command 3 will pull the SAT HDR GOES off line. After the random transmission attempt, the SAT HDR GOES must be put back on line with command 6. When command 6 is used, all data in the SAT HDR GOES is erased. Random transmission may require up to five minutes (GPS timeout) for setup and transmission. If command 6 is executed before transmission, random transmission will be canceled.

During GPS acquisition, the LED will light solid green. During transmission, the LED will light solid red. Command 3 will return 1 value, the command result code. Zero indicates a successful execution of command 3, but does not indicate the random transmission has happened or was successful.

P127, Command 4: Read SAT HDR GOES Error Registers

Read error registers of SAT HDR GOES. Requires 10 input locations.

TABLE 5.3-5. P127 Command 4: Read SAT HDR GOES Error Registers

In Loc	Contents
1	Result Code
2	Number of Errors
3	Command that Caused the Error
4	Error Code
5	Command that Caused the Error
6	Error Code
7	Command that Caused the Error
8	Error Code
9	Command that Caused the Error
10	Error Code

TABLE 5.3-6. Error Codes

Error Codes:

Hex	Decimal	
0x00	00	No error
0x01	01	Illegal command
0x02	02	Command rejected
0x03	03	Illegal checksum or too much data
0x04	04	Time out or too little data
0x05	05	Illegal parameter
0x06	06	Transmit buffer overflow
0x10	16	Message abort do to PLL
0x11	17	Message abort do to GPS
0x12	18	Message abort do to power supply – internal 16 volt – RF
0x13	19	Software fault
0x14	20	Failsafe fault
0x15	21	GPS time sync fault
0x16	22	SWR fault – transmission antenna connection

The SAT HDR GOES has 9 registers used to store information about errors that have occurred. The total number of errors are stored, up to 255. Also stored is the command that was issued when the error occurred and a code specific to the type or error. Internal fault codes are stored. When the command that failed is listed as 31 (0x1F), the error condition is an internal error with the SAT HDR GOES. The datalogger receives the error code as a hex value and converts to decimal. Decimal values are placed in input locations.

The error codes are very important information if the DCP experiences trouble during operation. If error code 0x12 (message abort do to Power Supply) is logged, the battery voltage has dropped below 9.6 V during transmission. Command code 31, error code 21 indicates the GPS receiver was not able to acquire a GPS fix. Generally a GPS time synchronize fault should not cause concern, but a GPS fault may cause a scheduled transmission to be missed. The data will be sent on the next transmission if P126 appends data to the self-timed buffer.

P127, Command 5: Clear SAT HDR GOES Error Registers

Clear error registers of SAT HDR GOES. Requires 1 input location.

TABLE 5.3-7. P127 Command 5: Clear Error Registers

In Loc	Contents
1	Result Code

Result code of 0 indicates success. Command 5 is used to erase all errors from the error registers of the SAT HDR GOES.

P127, Command 6: Return SAT HDR GOES to on-line mode.

Command 6 is used to return the SAT HDR GOES to online mode. Typically used after a forced random transmission. The SAT HDR GOES has an off-line time-out of one hour.

TABLE 5.3-8. P127 Command 6: Force On-line Mode

In Loc	Contents
1	Result code

Result code of 0 indicates success.

5.4 Programming Examples

5.4.1 Using P126

Program instruction 126 is used to copy data from the datalogger final storage area to the SAT HDR GOES data buffer.

Program example 1 writes data to final storage once an hour and transfers data to the SAT HDR GOES once every 4 hours.

```
Program Example 1

; Set output flag high hourly

1:  If time is (P92)
   1:   0            Minutes (Seconds --) into a
   2:   60           Interval (same units as above)
   3:   10           Set Output Flag High (Flag 0)

; Write a time stamp to final storage

2:  Real Time (P77)
   1:   1221         Year,Day,Hour/Minute,Seconds (midnight = 2400)

; Write 41 input locations to final storage

3:  Sample (P70)
   1:   41           Reps
   2:   1            Loc [ Status_RC ]

; Check if top of 4 hour interval, if true execute P126

4:  If time is (P92)
   1:   0            Minutes (Seconds --) into a
   2:   240          Interval (same units as above)
    3:  30           Then Do

; Transfer data to SAT HDR GOES

5:  Data Transfer to HDR GOES (P126)
   1:   0            Self-Timed/Append
   2:   0            Binary Format
   3:   41           Result Code Loc [ P126_RC   ]

6:  End (P95)
```

Program example 2 writes data to final storage once an hour and transfers data to the SAT HDR GOES once every 4 hours. Example 2 also shows how to use the result codes to ensure P126 executes successfully.

```
Program Example 2

; Set output flag high hourly

1:  If time is (P92)
   1:   0          Minutes (Seconds --) into a
   2:   60         Interval (same units as above)
   3:   10         Set Output Flag High (Flag 0)

; Write a time stamp to final storage

2:  Real Time (P77)
   1:   1221       Year,Day,Hour/Minute,Seconds (midnight = 2400)

; Write 41 input locations to final storage

3:  Sample (P70)
   1:   41         Reps
   2:   1          Loc [ Status_RC ]

; Check if top of 4 hour interval, if true execute P126

4:  If time is (P92)
   1:   0          Minutes (Seconds --) into a
   2:   240        Interval (same units as above)
   3:   30         Then Do

; Transfer data to SAT HDR GOES

5:  Data Transfer to HDR GOES (P126)
   1:   0          Self-Timed/Append
   2:   0          Binary Format
   3:   41         Result Code Loc [ P126_RC   ]

6:  End (P95)

; Check result code for P126, if between 1 and 6 P126 will be executed again.

7:  If (X<=>F) (P89)
   1:   41         X Loc [ P126_RC   ]
   2:   3          >=
   3:   1          F
   4:   30         Then Do

8:  If (X<=>F) (P89)
   1:   41         X Loc [ P126_RC   ]
   2:   4          <
   3:   7          F
   4:   30         Then Do
```

```
; increment counter to count number of time P126 has been tried again

9:  Z=Z+1 (P32)
   1:   42            Z Loc [ Counter   ]

; Try P126 again

10:  Data Transfer to HDR GOES (P126)
   1:   0             Self-Timed/Append
   2:   0             Binary Format
   3:   41            Result Code Loc [ P126_RC   ]

; Check number of times P126 has been executed unsuccessfully
; If P126 failed more than 3 times, give up and reset counter

11:  If (X<=>F) (P89)
   1:   42            X Loc [ Counter   ]
   2:   3             >=
   3:   4             F
   4:   30            Then Do

; Reset counter

12:  Z=F (P30)
   1:   0.0           F
   2:   00            Exponent of 10
   3:   42            Z Loc [ Counter   ]

; Set P126 result code to zero, this will stop P126 from
; executing until the 4 hour transmit time comes around again.

13:  Z=F (P30)
   1:   0.0           F
   2:   00            Exponent of 10
   3:   41            Z Loc [ P126_RC   ]

14:  End (P95)

15:  End (P95)

16:  End (P95)
```

6. Field Installation

6.1 Field Site Requirements

The SAT HDR GOES has two siting requirements for proper operation. The GPS antenna must have a clear view of most of the sky. The transmission antenna must have a clear view of the spacecraft. Other requirements are not specific to the SAT HDR GOES, but are mentioned here anyway. The SAT HDR GOES must be mounted in an enclosure that will protect it from the environment, including condensation. Most GOES systems are powered by a

battery that is charged by a solar panel. The solar panel must have a clear view of the southern sky. Pay special attention to winter sun angles.

6.2 Transmission Antenna

The SAT HDR GOES transmission antenna (part number 12261) is a right hand circular polarized Yagi with 9 dBic gain. The antenna is directional and should be aimed at the spacecraft. Both elevation and azimuth are unique the location on the planet, and must be set. A poorly aimed antenna will cause a drop in signal strength or possibly prevent successful transmission.

To determine antenna elevation and azimuth, use DCPComm help. Select Antenna Alignment. Enter the latitude, longitude and elevation for the field site. If you enter zero for Magnetic Variance, base your azimuth off true North. If you enter the Magnetic Declination in the Magnetic Variance field, base your azimuth off magnetic North. If you don't know the field site elevation, take a guess. Field site elevation has little influence on antenna azimuth and elevation.

The accuracy of the antenna aiming is not critical, but should be reasonably good. As a guide, if the antenna is aimed 55 degrees off the space craft, the received power will be half of a properly aimed antenna. Beyond 55 degrees, the received power drops off very quickly.

6.3 GPS Antenna

6.3.1 How the GPS Signal is Acquired and Used

The GPS signal is used for two functions. The obvious use is to keep track of time. The GPS receiver requires 3 satellites to acquire the time. For best accuracy, four satellites are required. The second use of the GPS signal is to correct the oscillator frequency. The GPS receiver will output a very accurate 1-second pulse. The 1-second pulse is used to correct oscillator drift caused by changes in temperature and crystal aging.

The GPS is required for proper operation. After the transmitter is reset, or first powered up, it can't schedule a transmission until a GPS fix has been established. After the first fix, the SAT HDR GOES will acquire a GPS fix about once an hour for the first 24 hours. Over the first 24 hours, The SAT HDR GOES will try to acquire enough GPS information to establish a relationship between crystal oscillator frequency and operating temperature. After 24 hours of continual operation, the SAT HDR GOES will be able to transmit without first acquiring a GPS fix, if the operating temperature does not change much from the previous 24 hours. Until the relationship between crystal oscillator frequency and temperature is established and stored in the SAT HDR GOES memory, a GPS fix will be required before transmission.

6.3.2 GPS Antenna Location

The ideal location for the GPS antenna is above everything, with the shortest cable possible. The GPS antenna will not receive the GPS signal through a steel roof or steel walls. Concrete will probably act like steel. Heavy foliage,

snow and ice will attenuate the GPS signal. The more of the sky the antenna has a clear unobstructed view of, the better the GPS performance. Better GPS performance will show up as less or no missed transmissions. Poor GPS antenna placement will increase the number of missed transmissions, or possibly stop all transmissions.

The GPS antenna mounting location is limited by the antenna cable length. Campbell Scientific supplies two different GPS antennae with different cable lengths. The 2 meter cable is intended for 6 and 10 foot tripod mounted applications. The 10 meter cable length allows mounting the antenna further away. The antenna cable can't be shortened or lengthened. Any attempt to cut the antenna cable will probably ruin it.

The GPS antenna includes a snap on mounting bracket that can be screwed to an external mounting surface. The mounting bracket is attached to the bottom of the antenna. As an alternative, the snap on mounting bracket can be removed to expose the magnet mount. Campbell Scientific also offers a separate mounting bracket number 14048. The optional mount is powder coated sheet metal that forms a right angle. A U-bolt for pole mounting is included. The mounting surface will hold the magnet and has threaded holes for the snap on mounting bracket.

Appendix A. Information on Eligibility and Getting Onto the GOES System

A.1 Eligibility

U.S. federal, state, or local government agencies, or users sponsored by one of those agencies, may use GOES. Potential GOES users must receive formal permission from NESDIS.

A.2 Acquiring Permission

1. The user contacts NESDIS at the following address and submits a formal request to transmit data via GOES. Non-U.S. or private users must also submit a written statement indicating that their sponsor requires all or part of the transmitted data. NESDIS will fax or mail the user a question form to complete and submit for approval.

   DCS Coordinator
   Federal Office Building 4
   Suitland, MD
   (301) 457-5681
   http://dcs.noaa.gov/contact.htm

2. Following approval, NESDIS sends a Memorandum of Agreement (MOA). The MOA must be signed and returned to NESDIS.

3. After the MOA is approved, NESDIS will issue a channel assignment and an ID address code.

4. NESDIS MUST BE contacted to coordinate a "start-up" date.

Appendix B. Data Conversion Computer Program (written in BASIC)

```
1    REM THIS PROGRAM CONVERTS 3-BYTE ASCII DATA INTO
     DECIMAL
5    INPUT "RECEIVE FILE?", RF$
6    OPEN RF$ FOR OUTPUT AS #2
10   INPUT "NAME OF FILE CONTAINING GOES DATA"; NFL$
20   DIM DV$(200)
25   WIDTH "LPT1:", 120
30   OPEN NFL$ FOR INPUT AS #1
40   WHILE NOT EOF(1)
50   LINE INPUT #1, A$
55   A$ = MID$(A$, 38)
56   PRINT A$
100  J = INT(LEN(A$) / 3)
105  PRINT J
110  FOR I = 1 TO J
120  DV$(I) = MID$(A$, 3 * I - 2, 3)
130  NEXT I
140  B$ = RIGHT$(A$, LEN(A$) - 3 * J)
160  A$ = B$ + A$
170  K = INT(LEN(A$) / 3)
180  L = J
190  FOR I = J + 1 TO L
200  DV$(I) = MID$(A$, 3 * (I - J) - 2, 3)
210  NEXT I
270  FOR I = 1 TO L
280  A = ASC(LEFT$(DV$(I), 1)) AND 15
290  B = ASC(MID$(DV$(I), 2, 1)) AND 63
300  C = ASC(RIGHT$(DV$(I), 1)) AND 63
310  IF (A * 64) + B >= 1008 THEN DV = (B - 48) * 64 + C + 9000:
     GOTO 400
320  IF A AND 8 THEN SF = -1 ELSE SF = 1
330  IF A AND 4 THEN SF = SF * .01
340  IF A AND 2 THEN SF = SF * .1
350  IF A AND 1 THEN DV = 4096
360  DV = (DV + ((B AND 63) * 64) + (C AND 63)) * SF
400  PRINT #2, USING "####.### "; DV;
405  IF I MOD 17 = 0 THEN PRINT #2, CHR$(13)
406  DV = 0
410  NEXT I
1000 WEND
```

Appendix C. Antenna Orientation Computer Program (written in BASIC)

```
5   REM THIS PROGRAM CALCULATES THE AZIMUTH AND
    ELEVATION FOR AN
6   REM ANTENNA USED WITH A DCP FOR GOES SATELLITE
    COMMUNICATIONS
10  CLS : CLEAR 1000
20  INPUT "SATELLITE LONGITUDE (DDD.DD)"; SO
30  INPUT "ANTENNA LONGITUDE (DDD.DD)"; SA
40  PRINT "ANTENNA LATITUDE (DDD.DD)--(SOUTH LATITUDE
    ENTERED"
45  INPUT "AS NEGATIVE NUMBER)"; AA: A = 90 - AA
50  INPUT "ANTENNA HEIGHT ABOVE SEA LEVEL IN FEET"; AH
60  T = SO - SA: TR = T * .01745329#: BR = 90 *  .01745329#: AR = A *
    .01745329#
70  X = COS(AR) * COS(BR) + SIN(AR) * SIN(BR) * COS(TR)
80  CR = -ATN(X / SQR(-X * X + 1)) + 1.5708
90  C = CR * (1 / .01745329#)
100 X1 = (SIN(BR) * SIN(TR)) / SIN(CR)
110 BR = ATN(X1 /SQR(-X1 * X1 + 1)): B = BR * (1 / .01745329#)
115 GOSUB 300
120 A1 = 90 - C: R1 = A1 * .01745329#
130 S1 = (6378 + (AH * .0003048)) / SIN(R1)
140 S2 = 35785! + 6378 - S1
150 A2 = 180 - A1: R2 = A2 * .01745329#
155 S4 = SQR(S1 ^ 2 - (6378 + AH * .0003048) ^ 2)
160 S3 = SQR(S4 ^ 2 + S2 ^ 2 - 2 * S4 * S2 * COS(R2))
170 X2 = (SIN(R2) / S3) * S2
180 ER = ATN(X2 / SQR(-X2 * X2 + 1)): E = ER * (1 / .01745329#)
190 PRINT "ANTENNA ELEVATION ANGLE="; E; " DEGREES"
200 PRINT "ANTENNA AZIMUTH ANGLE="; B; " DEGREES"
210 PRINT : PRINT : PRINT "HIT ANY KEY TO CONTINUE"
220 I$ = INKEY$: IF I$ = "" THEN 220 ELSE CLS : GOTO 20
300 IF T < 0 AND AA > 0 THEN B = B + 180: GOTO 380
310 IF T < 0 AND AA < 0 THEN B = B * -1: GOTO 380
320 IF T > 0 AND AA < 0 THEN B = 360 - B: GOTO 380
330 IF T > 0 AND AA > 0 THEN B = B + 180: GOTO 380
340 IF T = 0 AND AA > 0 THEN B = 180: GOTO 380
350 IF T = 0 AND AA < 0 THEN B = 360: GOTO 380
360 IF AA = 0 AND T > 0 THEN B = 270: GOTO 380
370 IF AA = 0 AND T < 0 THEN B = 90
380 RETURN
400 RETURN
460 RETURN
```

Appendix D. RAWS-7 Data Format

D.1 Introduction

RAWS-7 data format is used to transmit weather data in an ASCII based table format. Upon reception, data does not need to be decoded. Software such as WeatherPro can be used to archive and view the data. RAWS-7 data format is compatible with NIFC.

D.2 Format

RAWS-7 format writes data in columnar format. The first 7 data points are written to column 1, the next 7 data points are written to column 2 and the next 7 data points are written to column 3. Each data point is configured with a fixed decimal place and a fixed number of characters. The RAWS-7 data block is preceded by a carriage return and line feed character.

D.3 Programming the Datalogger for RAWS-7 format

When using the RAWS-7 format, special care should be taken to ensure the correct data will be written to final storage of the datalogger and thus transferred to the SAT HDR GOES transmitter. Data is written in groups of 7. One group of 7 represents 7 data points, usually for 1 hour of data. All data for the RAWS-7 group must be transferred from the datalogger to the transmitter at the same time. If writing hourly data, but transmitting on a 3-hour interval, write all three hours of RAWS-7 data before P126 is executed. Write additional data beyond the RAWS-7 data after the RAWS-7 data has been sent to the transmitter.

The RAWS-7 format has some special functions built in. The RAWS-7 format will behave differently depending on the amount of data in the active final storage area of the datalogger. If there are 7 data points in the active final storage area that have not been sent to the transmitter, the datalogger will format 1 column of data. More than 7 and less than 14 data points are not sent to the transmitter. If there are 14 data points, the RAWS-7 format will create a table with 2 columns of 7 rows. If 21 data points are available, 3 columns of 7 rows each are created. If the number of data points is more than 14 but less than 21, the first 14 data points are used while the extra are discarded. If there are more that 21 data points, 3 columns of 7 rows are created. Data points in excess of 21 are not sent to the transmitter, and can not be sent later.

The RAWS-7 data formats include fixed decimal place and fixed number of characters. If the data value exceeds the range of the data format, all numbers will default to 9. When the data value is negative, the minus sign is counted as one character. As an example, if using data format 6, x.xxx, the minus sign fills the only character location left of the decimal. All numbers less than -.999 will print as -.999. All numbers greater than 9.9 will print as 9.999. P126, second parameter, codes 3 through 8 are considered RAWS data formats

D.4 RAWS-7 Sample Data

00.12 00.05 01.09	Rain fall: Hundredths of and inch
109 022 002	Wind Speed: Avg of last 10 minutes
234 123 087	Wind Direction: Avg of last 10 minutes
115 069 -23	Air Temperature: Sample
100 056 012	Relative Humidity: Avg of Last 10 minutes
056 098 012	Fuel Temperature: Sample
10.5 11.9 13.6	Battery Voltage: Sample
	Oldest data in left column

Table D-1. RAWS-7 Output

Row Number	Measurement	Format
1	Total Rain (hr)	xx.xx
2	Wind Speed (10 min avg.)	xxx
3	Wing Direction (10 min avg.)	xxx
4	Air Temp (Sample)	xxx
5	RH (10 min avg.)	xxx
6	Fuel Temp (Sample)	xxx
7	Battery Voltage (Sample)	xx.x

Using P126 for RAWS-7 data format

P126 has three parameters. Parameter 2 "Data Format" is used to select the desired data format.

1: Data Transfer to HDR GOES (P126)
  1: 0000 Buffer Control
  2: 0000 Data Format
  3: 0000 Result Code Loc [_____]

Parameter 2: Data Format
0 CSI Floating Point Binary
1 Floating Point ASCII
2 Binary Integer, 18 Bit
3 RAWS 7, Fire Weather
4 Fixed Decimal, ASCII, xxx.x
5 Fixed Decimal, ASCII, xx.xx
6 Fixed Decimal, ASCII, x.xxx
7 Fixed Decimal, ASCII, xxx
8 Fixed Decimal, ASCII, xxxxx

P126 format code 3
ASCII RAWS-7 format, 1, 2 or 3 columns

1	Total Rain	xx.xx
2	Avg Wind Speed	xxx
3	Avg Wing Direction	xxx
4	Sample Air Temp	xxx
5	Avg Relative Humidity	xxx
6	Sample Fuel Temp	xxx
7	Battery Voltage	xx.x

P126 format code 4
ASCII fixed decimal xxx.x

P126 format code 5
ASCII fixed decimal xx.xx

P126 format code 6
ASCII fixed decimal x.xxx

P126 format code 7
ASCII fixed decimal xxx

P126 format code 8
ASCII fixed decimal xxxxx

D.5 Writing additional data values beyond the RAWS-7

If additional data points beyond the RAWS-7 need to be transmitted, each row of data is stored in input locations until the data set is complete. Then the data is copied to the transmitter.

When P126 is executed with a data format code of 4 through 8, the line of data is preceded by a carriage return and line feed. Each data point is separated by a space. Format code 8 can be used with high or low resolution data. Three steps are required to write a row of data: Set the output flag, write data to final storage, copy data to transmitter by executing P126.

Program example

CR10X program example to send fire weather data. If using the example program, using the input location editor to name all the input locations can be helpful. In Edlog.exe, start a new program then press F5 to bring up the input location editor. Type in the names for all the input locations. The input location names are listed at the end of the program example. F6 will bring up a pick list of all the input locations. Using the pick list helps to avoid mistakes when selecting input locations.

```
;{CR10X}
;
; RAWS-7 Data format example program
;
;Description:

; Measurements:
; Battery voltage (BattVolt) - volts
; Air temperature (AirTemp) - Degrees F
; Relative humidity (RH) - Percent
; Wind speed (Wspd) - MPH
; Wind direction (Wdir) - Degrees 0 to 355
; Fuel temperature (FuelT) - Degrees F
; Fuel Moisture (FuelM) - Percent
; Precipitation (Prcip) - Hundredth of inch
; Solar radiation (Srad) - Watts per meter squared W/m^2
;
; Calculations:
; 10 minute averages for wind speed and direction.
; Hourly maximum wind speed with corresponding wind direction.
; Program Signature (Prog_Sig)

; RAWS-7 data format and transmission:
;
; Program based on a 3 hour window. Hourly data transmitted. The hourly
; RAWS-7 values are written to final storage at the top of the hour.

; At the top of the 3 hour interval, the RAWS-7 values are copied
; to the SAT HDR GOES transmitter. (P126, Self-timed/insert, format code 3).

; Four additional values are written to final storage and copied to
; the SAT HDR GOES:
; Hourly maximum wind speed and direction of max wind speed.
; Hourly average solar radiation.
; Hourly Fuel moisture
;

*Table 1 Program
  01:  10            Execution Interval (seconds)

1:  Batt Voltage (P10)
  1:   1             Loc [ BattVolt  ]

; Power up air temp and RH sensor (HMP45C-L)
2:  Do (P86)
  1:   41            Set Port 1 High

; Power up fuel moisture sensor
3:  Do (P86)
  1:   48            Set Port 8 High
```

```
; Measure Fuel Moisture
; Wiring:
; Power enable: C8
; Signal: SE 12
4:  Period Average (SE) (P27)
   1:   1          Reps
   2:   4          200 kHz Max Freq @ 2 V Peak to Peak, Period Output
   3:   12         SE Channel
   4:   10         No. of Cycles
   5:   5          Timeout (units = 0.01 seconds)
   6:   28         Loc [ FuelM     ]
   7:   .001       Mult
   8:   0          Offset

5:  Do (P86)
   1:   58         Set Port 8 Low

; Measure temperature and RH (HMP45C-L)
6:  Excitation with Delay (P22)
   1:   1          Ex Channel
   2:    0         Delay W/Ex (units = 0.01 sec)
   3:   15         Delay After Ex (units = 0.01 sec)
   4:   0          mV Excitation

7:  Volt (SE) (P1)
   1:   1          Reps
   2:   25         2500 mV 60 Hz Rejection Range
   3:   2          SE Channel
   4:   3          Loc [ AirTemp   ]
   5:   .1         Mult
   6:   -40        Offset

8:  Volt (SE) (P1)
   1:   1          Reps
   2:   25         2500 mV 60 Hz Rejection Range
   3:   1          SE Channel
   4:   4          Loc [ RH        ]
   5:   .1         Mult
   6:   0          Offset

; Measure wind speed (03001-L)
9:  Pulse (P3)
   1:   1          Reps
   2:   1          Pulse Channel 1
   3:   21         Low Level AC, Output Hz
   4:   5          Loc [ Wspd      ]
   5:   1.677      Mult ; MPH
   6:   0.4        Offset
```

```
; Wind Direction (03001-L)
10:  Excite-Delay (SE) (P4)
   1:   1            Reps
   2:   5            2500 mV Slow Range
   3:   3            SE Channel
   4:   2            Excite all reps w/Exchan 2
   5:   2            Delay (units 0.01 sec)
   6:   2500         mV Excitation
   7:   6            Loc [ Wdir      ]
   8:   0.142        Mult
   9:   0            Offset

; Measure fuel temp
11:  Temp (107) (P11)
   1:   1            Reps
   2:   9            SE Channel
   3:   3            Excite all reps w/E3
   4:   7            Loc [ FuelT     ]
   5:   1.8          Mult
   6:   32           Offset

; Measure precip (TE525-L)
12:  Pulse (P3)
   1:   1            Reps
   2:   2            Pulse Channel 2
   3:   2            Switch Closure, All Counts
   4:   8            Loc [ Prcip     ]
   5:   0.01         Mult
   6:   0            Offset

; Measure solar radiation (LI200X-L)
13:  Volt (Diff) (P2)
   1:   1            Reps
   2:   22           7.5 mV 60 Hz Rejection Range
   3:   3            DIFF Channel
   4:   9            Loc [ SRad      ]
   5:   200          Mult
   6:   0            Offset

; **** Start of calculation section ****
; Set negative solar radiation values to zero
14:  If (X<=>F) (P89)
   1:   9            X Loc [ SRad      ]
   2:   4            <
   3:   0            F
   4:   30           Then Do

15:  Z=F (P30)
   1:   0            F
   2:   0            Exponent of 10
   3:   9            Z Loc [ SRad      ]

16:  End (P95)
```

```
; Correct Fuel Moisture
17:  Polynomial (P55)
   1:   1            Reps
   2:   28           X Loc [ FuelM     ]
   3:   28           F(X) Loc [ FuelM     ]
   4:   -220.14      C0
   5:   365.89       C1
   6:   -114.96      C2
   7:   0.0          C3
   8:   0.0          C4
   9:   0.0          C5

; Convert Air Temp to degrees F
18:  Z=X*F (P37)
   1:   3            X Loc [ AirTemp   ]
   2:   1.8          F
   3:   3            Z Loc [ AirTemp   ]

19:  Z=X+F (P34)
   1:   3            X Loc [ AirTemp   ]
   2:   32.0         F
   3:   3            Z Loc [ AirTemp   ]

; Eliminate RH values greater than 100
20:  If (X<=>F) (P89)
   1:   4            X Loc [ RH        ]
   2:   3            >=
   3:   100          F
   4:   30           Then Do

21:  Z=F (P30)
   1:   100          F
   2:   0            Exponent of 10
   3:   4            Z Loc [ RH        ]

22:  End (P95)

; correct zero wind speed offset.
23:  If (X<=>F) (P89)
   1:   5            X Loc [ Wspd      ]
   2:   4            <
   3:   0.4001       F
   4:   30           Then Do

24:  Z=F (P30)
   1:   0            F
   2:   0            Exponent of 10
   3:   5            Z Loc [ Wspd      ]

25:  End (P95)
```

```
; if no fuel temp sensor,
; load 999 for data value
26:  If (X<=>F) (P89)
   1:   7              X Loc [ FuelT     ]
   2:   4              <
   3:   -35            F
   4:   30             Then Do

27:  Z=F (P30)
   1:   999            F
   2:   0              Exponent of 10
   3:   7              Z Loc [ FuelT     ]

28:  End (P95)

29:  If (X<=>F) (P89)
   1:   7              X Loc [ FuelT     ]
   2:   3              >=
   3:   55             F
   4:   30             Then Do

30:  Z=F (P30)
   1:   999            F
   2:   00             Exponent of 10
   3:   7              Z Loc [ FuelT     ]

31:  End (P95)

; Calculate program signature once a day
32:  If time is (P92)
   1:   0              Minutes (Seconds --) into a
   2:   1440           Interval (same units as above)
   3:   30             Then Do

33:  Signature (P19)
   1:   2              Loc [ Prog_Sig  ]

34:  End (P95)

; Calculate and hold 10 minute averages for Wspd and Wdir
; Values are written to input locations 10 and 11 (Avg10WS, Avg10WD)
35:  If time is (P92)
   1:   0              Minutes (Seconds --) into a
   2:   10             Interval (same units as above)
   3:   10             Set Output Flag High (Flag 0)

; Direct output processing to input locations
36:  Set Active Storage Area (P80)
   1:   3              Input Storage Area
   2:   10             Loc [ Avg10WS   ]
```

```
; Calculate average wind speed and direction
37:  Wind Vector (P69)
   1:   1              Reps
   2:   0              Samples per Sub-Interval
   3:   1              S, é1 Polar
   4:   5              Wind Speed/East Loc [ Wspd      ]
   5:   6              Wind Direction/North Loc [ Wdir      ]

; Calculate and hold hourly Max Wspd and Wdir in input
; locations 12 and 13 (MaxHrWS, MaxHrWD)
38:  If time is (P92)
   1:   0              Minutes (Seconds --) into a
   2:   60             Interval (same units as above)
   3:   10             Set Output Flag High (Flag 0)

; Direct output processing to input locations
39:  Set Active Storage Area (P80)
   1:   3              Input Storage Area
   2:   12             Loc [ MaxHrWS   ]

40:  Maximum (P73)
   1:   1              Reps
   2:   0              Value Only
   3:   5              Loc [ Wspd      ]

41:  Sample on Max or Min (P79)
   1:   1              Reps
   2:   6              Loc [ Wdir      ]

; Write hourly RAWS-7 data to final storage area 1.
; Order is important, First in - First out.
;Precip                (Hourly Total)
;Wind Speed            (10 minute Average prior to the hour)
;Wind Direction        (10 minute Average prior to the hour)
;Air Temperature       (Hourly Sample)
;Fuel Temperature      (Hourly Sample)
;RH                    (Hourly Sample)
;Battery Voltage       (Hourly Minimum)

42:  If time is (P92)
   1:   0              Minutes (Seconds --) into a
   2:   60             Interval (same units as above)
   3:   10             Set Output Flag High (Flag 0)

; Direct output processing to final storage area 1
43:  Set Active Storage Area (P80)
   1:   1              Final Storage Area 1
   2:   60             Array ID

44:  Totalize (P72)
   1:   1              Reps
   2:   8              Loc [ Prcip     ]

45:  Sample (P70)
   1:   1              Reps
   2:   10             Loc [ Avg10WS   ]
```

```
46:  Sample (P70)
  1:   1              Reps
  2:   11             Loc [ Avg10WD   ]

47:  Sample (P70)
  1:   1              Reps
  2:   3              Loc [ AirTemp   ]

48:  Sample (P70)
  1:   1              Reps
  2:   7              Loc [ FuelT     ]

49:  Sample (P70)
  1:   1              Reps
  2:   4              Loc [ RH        ]

50:  Minimum (P74)
  1:   1              Reps
  2:   0              Value Only
  3:   1              Loc [ BattVolt  ]

; Send the basic RAWS-7 data to the SAT HDR GOES 5 minutes before transmit time.
; FS 1 must contain only the new RAWS-7 data, 3 hours of data.
51:  If time is (P92)
  1:   65             Minutes (Seconds --) into a
  2:   180            Interval (same units as above)
  3:   30             Then Do

; P126 set to "insert" data to "self-timed" buffer.
; Insert will erase the buffer before sending the
; new RAWS-7 data.
52:  Data Transfer to HDR GOES (P126)
  1:   1              Self Timed/Insert
  2:   3              ASCII RAWS-7 Format
  3:   14             Result Code Loc [ P126_RC   ]

53:  End (P95)

; ************************************************
; Calculate and hold data beyond the RAWS-7 data.
; ************************************************

; Four additional data values are written.
; Must create a table, one column for each hour.
; Each column has 4 data points:
; Direction of Max wind speed, Max wind speed,
; Ave Solar Radiation, fuel moisture.
; Solar radiation is in high resolution format.

; FIRST HOUR
; First hour (column 1) is the top of the first hour after
; the transmit window.

; Move hourly values to "old" place holders
; Input storage is used to hold hourly data until
```

```
; 3 hours of RAWS-7 data has been written to final storage
; and sent to the transmitter
54:  If time is (P92)
   1:   120          Minutes (Seconds --) into a ;changed 3/31/0
   2:   180          Interval (same units as above)
   3:   10           Set Output Flag High (Flag 0)

55:  Set Active Storage Area (P80)
   1:   3            Input Storage Area
   2:   16           Loc [ MaxWD_Old ]

56:  Sample (P70)
   1:   1            Reps
   2:   13           Loc [ WDHrMxWS  ]

57:  Set Active Storage Area (P80)
   1:   3            Input Storage Area
   2:   19           Loc [ MaxWS_Old ]

58:  Sample (P70)
   1:   1            Reps
   2:   12           Loc [ MaxHrWS   ]

59:  Set Active Storage Area (P80)
   1:   3            Input Storage Area
   2:   22           Loc [ SRad_Old  ]

;Solar radiation is high resolution format
60:  Resolution (P78)
   1:   1            High Resolution

61:  Average (P71)
   1:   1            Reps
   2:   9            Loc [ SRad      ]

62:  Resolution (P78)
   1:   0            Low Resolution

; Fuel Moisture
63:  Set Active Storage Area (P80)
   1:   3            Input Storage Area
   2:   25           Loc [ FM_Old    ]

64:  Sample (P70)
   1:   1            Reps
   2:   28           Loc [ FuelM     ]

;SECOND HOUR

; At the second hour of a 3 hour interval, move hourly data
; values to the "mid" place holders.
65:  If time is (P92)
   1:   0            Minutes (Seconds --) into a ;changed 3/31/0
   2:   180          Interval (same units as above)
   3:   10           Set Output Flag High (Flag 0)
```

```
66:  Set Active Storage Area (P80)
  1:   3              Input Storage Area
  2:   17             Loc [ MaxWD_Mid ]

67:  Sample (P70)
  1:   1              Reps
  2:   13             Loc [ WDHrMxWS  ]

68:  Set Active Storage Area (P80)
  1:   3              Input Storage Area
  2:   20             Loc [ MaxWS_Mid ]

69:  Sample (P70)
  1:   1              Reps
  2:   12             Loc [ MaxHrWS   ]

70:  Set Active Storage Area (P80)
  1:   3              Input Storage Area
  2:   23             Loc [ SRad_Mid  ]

71:  Resolution (P78)
  1:   1              High Resolution

72:  Average (P71)
  1:   1              Reps
  2:   9              Loc [ SRad      ]

73:  Resolution (P78)
  1:   0              Low Resolution

74:  Set Active Storage Area (P80)
  1:   3              Input Storage Area
  2:   26             Loc [ FM_Mid    ]

75:  Sample (P70)
  1:   1              Reps
  2:   28             Loc [ FuelM     ]

;THIRD HOUR

; At the top of the 3rd hour, move hourly data values
; to the "new" place holders
76:  If time is (P92)
  1:   60             Minutes (Seconds --) into a ;changed 3/31/0
  2:   180            Interval (same units as above)
  3:   10             Set Output Flag High (Flag 0)

77:  Set Active Storage Area (P80)
  1:   3              Input Storage Area
  2:   18             Loc [ MaxWD_New ]

78:  Sample (P70)
  1:   1              Reps
  2:   13             Loc [ WDHrMxWS  ]
```

```
79:  Set Active Storage Area (P80)
  1:   3              Input Storage Area
  2:   21             Loc [ MaxWS_New ]

80:  Sample (P70)
  1:   1              Reps
  2:   12             Loc [ MaxHrWS   ]

81:  Set Active Storage Area (P80)
  1:   3              Input Storage Area
  2:   24             Loc [ SRad_New  ]

82:  Resolution (P78)
  1:   1              High Resolution

83:  Average (P71)
  1:   1              Reps
  2:   9              Loc [ SRad      ]

84:  Resolution (P78)
  1:   0              Low Resolution

85:  Set Active Storage Area (P80)
  1:   3              Input Storage Area
  2:   27             Loc [ FM_New    ]

86:  Sample (P70)
  1:   1              Reps
  2:   28             Loc [ FuelM     ]

; ***********************************************
; Data values beyond RAWS-7, written to final
; storage and copied to transmitter
; ***********************************************
;

; Write wind direction of the max wind speed, max wind speed,
; average solar radiation and fuel moisture to FS 1 and the GOES transmitter.
; Format will look like:
; xxx xxx xxx          Dir Max WS  :   Oldest to the left
; xxx xxx xxx          Max WS      :   Oldest to the left
; xxxxx xxxxx xxxxx    Avg SRad    :   Oldest to the left
; xxx xxx xxx          fuel mois   :   Oldest to the left

;P126 Instruction, Parameter 2 Options
; 3 RAWS-7 Output
; 4 xxx.x ASCII Output
; 5 xx.xx ASCII Output
; 6 x.xxx ASCII Output
; 7 xxx   ASCII Output
; 8 xxxxx ASCII Output of a high resolution value
```

```
; No less than 5 minutes before transmit time, data is
; written to final storage and copied to the transmitter
87:  If time is (P92)
   1:   65          Minutes (Seconds --) into a
   2:   180         Interval (same units as above)
   3:   30          Then Do

88:  Do (P86)
   1:   10          Set Output Flag High (Flag 0)

89:  Set Active Storage Area (P80)
   1:   1           Final Storage Area 1
   2:   123         Array ID

; Write first row after RAWS-7 data, Row 8.
; Direction of max wind speed
90:  Sample (P70)
   1:   3           Reps
   2:   16          Loc [ MaxWD_Old ]

; Copy Row 8 to transmitter
91:  Data Transfer to HDR GOES (P126)
   1:   0           Self-Timed/Append
   2:   7           ASCII xxx Format
   3:   14          Result Code Loc [ P126_RC   ]

92:  Do (P86)
   1:   10          Set Output Flag High (Flag 0)

; Write row 9 to final storage, Max Wind Speed
93:  Sample (P70)
   1:   3           Reps
   2:   19          Loc [ MaxWS_Old ]

; Copy to transmitter
94:  Data Transfer to HDR GOES (P126)
   1:   0           Self-Timed/Append
   2:   7           ASCII xxx Format
   3:   14          Result Code Loc [ P126_RC   ]

95:  Do (P86)
   1:   10          Set Output Flag High (Flag 0)

; Set resolution high
96:  Resolution (P78)
   1:   1           High Resolution

; Write row 10 to final storage
97:  Sample (P70)
   1:   3           Reps
   2:   22          Loc [ SRad_Old  ]

; set resolution low
98:  Resolution (P78)
   1:   0           Low Resolution
```

```
; Copy row 10 to transmitter
99:  Data Transfer to HDR GOES (P126)
   1:   0              Self-Timed/Append
   2:   8              ASCII xxxxx Format
   3:   14             Result Code Loc [ P126_RC   ]

100:  Do (P86)
   1:   10             Set Output Flag High (Flag 0)

; Write row 11 to final storage
101:  Sample (P70)
   1:   3              Reps
   2:   25             Loc [ FM_Old    ]

; Copy row 11 to transmitter
102:  Data Transfer to HDR GOES (P126)
   1:   0              Self-Timed/Append
   2:   7              ASCII xxx Format
   3:   14             Result Code Loc [ P126_RC   ]

103:  End (P95)

*Table 2 Program
   02:  600            Execution Interval (seconds)

1:  If time is (P92)
   1:   0              Minutes (Seconds --) into a
   2:   180            Interval (same units as above)
   3:   30             Then Do

2:  HDR GOES Status (P127)
   1:   2              Read Last Message Status
   2:   30             Result Code Loc [ L_Msg_RC  ]

3:  Z=X*F (P37)
   1:   35             X Loc [ Batt_load ]
   2:   .1             F
   3:   35             Z Loc [ Batt_load ]

4:  Z=X*F (P37)
   1:   36             X Loc [ GPSAccTm  ]
   2:   10             F
   3:   36             Z Loc [ GPSAccTm  ]

5:  End (P95)

; Set datalogger clock to GPS time once a day
6:  If time is (P92)
   1:   150            Minutes (Seconds --) into a
   2:   1440           Interval (same units as above)
   3:   30             Then Do

7:  HDR GOES Status (P127)
   1:   0              Read Time
   2:   44             Result Code Loc [ time_rc   ]
```

```
8:  If (X<=>F) (P89)
   1:   44            X Loc [ time_rc   ]
   2:   4             <
   3:   1             F
   4:   30            Then Do

9:  If (X<=>F) (P89)
   1:   45            X Loc [ GPS_hour  ]
   2:   3             >=
   3:   0             F
   4:   30            Then Do

10:  If (X<=>F) (P89)
   1:   45            X Loc [ GPS_hour  ]
   2:   4             <
   3:   24.1          F
   4:   30            Then Do

11:  Set Real Time Clock (P114)
   1:   0             Set Hr,Min,Sec from locations
   2:   45            Loc [ GPS_hour  ]

12:  End (P95)

13:  End (P95)

14:  End (P95)

15:  End (P95)

16:  If time is (P92)
   1:   0             Minutes (Seconds --) into a
   2:   180           Interval (same units as above)
   3:   10            Set Output Flag High (Flag 0)

17:  Set Active Storage Area (P80)
   1:   2             Final Storage Area 2
   2:   222           Array ID

18:  Real Time (P77)
   1:   0220          Day,Hour/Minute (midnight = 2400)

19:  Sample (P70)
   1:   1             Reps
   2:   14            Loc [ P126_RC   ]

20:  Sample (P70)
   1:   8             Reps
   2:   30            Loc [ L_Msg_RC  ]

21:  Sample (P70)
   1:   1             Reps
   2:   2             Loc [ Prog_Sig  ]

*Table 3 Subroutines

End Program
```

Appendix E. GOES DCS Transmit Frequencies

300 & 100 BPS Channels		1200 BPS	Channels
Channel Number	Frequency MHz	Channel Number+ A	Frequency MHz
1	401.701000	1	401.701750
2	401.702500		
3	401.704000	2	401.704750
4	401.705500		
5	401.707000	3	401.707750
6	401.708500		
7	401.710000	4	401.710750
8	401.711500		
9	401.713000	5	401.713750
10	401.714500		
11	401.716000	6	401.716750
12	401.717500		
13	401.719000	7	401.719750
14	401.720500		
15	401.722000	8	401.722750
16	401.723500		
17	401.725000	9	401.725750
18	401.726500		
19	401.728000	10	401.728750
20	401.729500		
21	401.731000	11	401.731750
22	401.732500		
23	401.734000	12	401.734750
24	401.735500		
25	401.737000	13	401.737750
26	401.738500		
27	401.740000	14	401.740750
28	401.741500		
29	401.743000	15	401.743750
30	401.744500		
31	401.746000	16	401.746750
32	401.747500		
33	401.749000	17	401.749750
34	401.750500		
35	401.752000	18	401.752750
36	401.753500		
37	401.755000	19	401.755750
38	401.756500		
39	401.758000	20	401.758750
40	401.759500		
41	401.761000	21	401.761750
42	401.762500		
43	401.764000	22	401.764750
44	401.765500		
45	401.767000	23	401.767750
46	401.768500		
47	401.770000	24	401.770750

300 & 100 BPS Channels		1200 BPS	Channels
Channel Number	Frequency MHz	Channel Number+ A	Frequency MHz
48	401.771500		
49	401.773000	25	401.773750
50	401.774500		
51	401.776000	26	401.776750
52	401.777500		
53	401.779000	27	401.779750
54	401.780500		
55	401.782000	28	401.782750
56	401.783500		
57	401.785000	29	401.785750
58	401.786500		
59	401.788000	30	401.788750
60	401.789500		
61	401.791000	31	401.791750
62	401.792500		
63	401.794000	32	401.794750
64	401.795500		
65	401.797000	33	401.797750
66	401.798500		
67	401.800000	34	401.800750
68	401.801500		
69	401.803000	35	401.803750
70	401.804500		
71	401.806000	36	401.806750
72	401.807500		
73	401.809000	37	401.809750
74	401.810500		
75	401.812000	38	401.812750
76	401.813500		
77	401.815000	39	401.815750
78	401.816500		
79	401.818000	40	401.818750
80	401.819500		
81	401.821000	41	401.821750
82	401.822500		
83	401.824000	42	401.824750
84	401.825500		
85	401.827000	43	401.827750
86	401.828500		
87	401.830000	44	401.830750
88	401.831500		
89	401.833000	45	401.833750
90	401.834500		
91	401.836000	46	401.836750
92	401.837500		
93	401.839000	47	401.839750
94	401.840500		

300 & 100 BPS Channels		1200 BPS	Channels
Channel	Frequency	Channel	Frequency
Number	MHz	Number+ A	MHz
95	401.842000	48	401.842750
96	401.843500		
97	401.845000	49	401.845750
98	401.846500		
99	401.848000	50	401.848750
100	401.849500		
101	401.851000	51	401.851750
102	401.852500		
103	401.854000	52	401.854750
104	401.855500		
105	401.857000	53	401.857750
106	401.858500		
107	401.860000	54	401.860750
108	401.861500		
109	401.863000	55	401.863750
110	401.864500		
111	401.866000	56	401.866750
112	401.867500		
113	401.869000	57	401.869750
114	401.870500		
115	401.872000	58	401.872750
116	401.873500		
117	401.875000	59	401.875750
118	401.876500		
119	401.878000	60	401.878750
120	401.879500		
121	401.881000	61	401.881750
122	401.882500		
123	401.884000	62	401.884750
124	401.885500		
125	401.887000	63	401.887750
126	401.888500		
127	401.890000	64	401.890750
128	401.891500		
129	401.893000	65	401.893750
130	401.894500		
131	401.896000	66	401.896750
132	401.897500		
133	401.899000	67	401.899750
134	401.900500		
135	401.902000	68	401.902750
136	401.903500		
137	401.905000	69	401.905750
138	401.906500		
139	401.908000	70	401.908750
140	401.909500		
141	401.911000	71	401.911750
142	401.912500		
143	401.914000	72	401.914750
144	401.915500		

300 & 100 BPS Channels		1200 BPS	Channels
Channel	Frequency	Channel	Frequency
Number	MHz	Number+ A	MHz
145	401.917000	73	401.917750
146	401.918500		
147	401.920000	74	401.920750
148	401.921500		
149	401.923000	75	401.923750
150	401.924500		
151	401.926000	76	401.926750
152	401.927500		
153	401.929000	77	401.929750
154	401.930500		
155	401.932000	78	401.932750
156	401.933500		
157	401.935000	79	401.935750
158	401.936500		
159	401.938000	80	401.938750
160	401.939500		
161	401.941000	81	401.941750
162	401.942500		
163	401.944000	82	401.944750
164	401.945500		
165	401.947000	83	401.947750
166	401.948500		
167	401.950000	84	401.950750
168	401.951500		
169	401.953000	85	401.953750
170	401.954500		
171	401.956000	86	401.956750
172	401.957500		
173	401.959000	87	401.959750
174	401.960500		
175	401.962000	88	401.962750
176	401.963500		
177	401.965000	89	401.965750
178	401.966500		
179	401.968000	90	401.968750
180	401.969500		
181	401.971000	91	401.971750
182	401.972500		
183	401.974000	92	401.974750
184	401.975500		
185	401.977000	93	401.977750
186	401.978500		
187	401.980000	94	401.980750
188	401.981500		
189	401.983000	95	401.983750
190	401.984500		
191	401.986000	96	401.986750
192	401.987500		
193	401.989000	97	401.989750
194	401.990500		

300 & 100 BPS Channels		1200 BPS	Channels
Channel	Frequency	Channel	Frequency
Number	MHz	Number+ A	MHz
195	401.992000	98	401.992750
196	401.993500		
197	401.995000	99	401.995750
198	401.996500		
199	401.998000	100	401.998750
200	401.999500		
201	402.001000	101	402.001750
202	402.002500		
203	402.004000	102	402.004750
204	402.005500		
205	402.007000	103	402.007750
206	402.008500		
207	402.010000	104	402.010750
208	402.011500		
209	402.013000	105	402.013750
210	402.014500		
211	402.016000	106	402.016750
212	402.017500		
213	402.019000	107	402.019750
214	402.020500		
215	402.022000	108	402.022750
216	402.023500		
217	402.025000	109	402.025750
218	402.026500		
219	402.028000	110	402.028750
220	402.029500		
221	402.031000	111	402.031750
222	402.032500		
223	402.034000	112	402.034750
224	402.035500		
225	402.037000	113	402.037750
226	402.038500		
227	402.040000	114	402.040750
228	402.041500		
229	402.043000	115	402.043750
230	402.044500		
231	402.046000	116	402.046750
232	402.047500		
233	402.049000	117	402.049750
234	402.050500		
235	402.052000	118	402.052750
236	402.053500		
237	402.055000	119	402.055750
238	402.056500		
239	402.058000	120	402.058750
240	402.059500		
241	402.061000	121	402.061750
242	402.062500		
243	402.064000	122	402.064750
244	402.065500		

300 & 100 BPS Channels		1200 BPS	Channels
Channel	Frequency	Channel	Frequency
Number	MHz	Number+ A	MHz
245	402.067000	123	402.067750
246	402.068500		
247	402.070000	124	402.070750
248	402.071500		
249	402.073000	125	402.073750
250	402.074500		
251	402.076000	126	402.076750
252	402.077500		
253	402.079000	127	402.079750
254	402.080500		
255	402.082000	128	402.082750
256	402.083500		
257	402.085000	129	402.085750
258	402.086500		
259	402.088000	130	402.088750
260	402.089500		
261	402.091000	131	402.091750
262	402.092500		
263	402.094000	132	402.094750
264	402.095500		
265	402.097000	133	402.097750
266	402.098500		

Appendix F. High Resolution 18-Bit Binary Format

When using the binary 18 bit signed 2's complement integer format, all data values in the datalogger final storage area must be in high resolution format. In most cases the datalogger program should set the data resolution to high at the beginning of the program. Use the P78 instruction with parameter 1 set to 1. Note: P77 Real Time can not write the time or date in high resolution. To send a time stamp, first write the time back to input locations, then sample the input locations as high resolution. As an alternative to using P77 for a time stamp, the GPS time can be retrieved from the transmitter and written to final storage in high resolution format. See instruction P127 for details.

Because the binary 18 bit integer is an integer, all information to the right of the decimal point is dropped. This occurs while the datalogger is copying data to the transmitter. The original data is left intact in final storage of the datalogger. If transmitted data requires precision to the right of the decimal place, multiply the number by the required factor of 10 before storing the data to final storage. After data is received by the ground station, division by the appropriate factor of 10 will replace the decimal point.

In high resolution format, data stored in final storage has a maximum magnitude of 99999 and a minimum magnitude of 0.00001.

NESDIS has placed restrictions on the format of data sent over the GOES satellite network. The first restriction is the use of 7 data bits and one parity bit per byte. The second restriction is the most significant data bit of each byte, bit 6, is always set. Without data, each byte transmitted over the satellite has the format of "p1xxxxxx". The x's will hold the 6 bits per byte allocated to data information. The "p" is the parity bit and the "1" is bit 6 which is always set. Resolution of each data point would be severely limited if the data point consisted of only 6 bits. We use 3 consecutive bytes to form a data point word. The first byte sent is byte 3, the most significant byte. A complete word is created by using 3 consecutive bytes, stripping the 2 most significant bits from each byte, then combining the 3 bytes into a word. See the examples below.

Each data point is formatted as an 18 bit integer. The format uses the most significant bit (bit 17) to designate sign. The format of each 3 byte data point is as follows, note the top row shows the bits used and there significance.

		17	16	15	14	13	12			11	10	9	8	7	6			5	4	3	2	1	0
p	1	x	x	x	x	x	x	p	1	x	x	x	x	x	x	p	1	x	x	x	x	x	x

Where each "p" is the parity bit for that byte.
Where each "1" is bit 6 for that byte and always set to 1
Where the 6 "x"s represent bits 0 through 5, these make up the information for each byte.
Where the 18 bit data point is made by combining the three bytes after bit 7 and bit 6 of each byte have been dropped.
Where 0 represents bit 0 - the least significant bit

Where 17 represents bit 17 - the most significant bit and is used to determine the sign.

Converting the 18 bit data point to an integer can be done manually. Don't forget the 18 bits are numbered 0 through 17. Bit 17 is the sign bit, when bit 17 is set, the number is negative. If bit 17 is set, subtract 1 from the number then take the complement of the number. If bit 17 is not set, simply convert the number to its decimal equivalent.

Example positive data point conversion:

Byte Label	byte 3	byte 2	byte 1
Actual data point	01000101	11110010	11010010
Drop first 2 bits of each byte	000101	110010	010010
Combine the 3 bytes into one word	000101 110010 010010		
Convert from Binary to Decimal	23698		

Example of a negative data point conversion:

Byte Label	byte 3	byte 2	byte 1
Actual data point	01111010	11001101	11101101
Drop first 2 bits of each byte	111010	001101	101101
Notice bit 17 is set,			
Combine the 3 bytes into one word	111010 001101 101101		
Subtract 1 from the number	111010 001101 101100		
Take the complement of each bit	000101 110010 010011		
Convert the binary value into a decimal value, don't forget the negative sign	-23699		

Appendix G. GOES/Radio Set Certification

National Environmental Satellite,Data, and Information Service

Certificate Number
1100-001

Certifies that SEIMAC LIMITED
Model DCPR "SAT HDR GOES"

Has been type tested and meets the requirements for use in the Geostationary Operational Environmental Satellite Data Collection System.

Condition

If design changes or modifications are made that affect its technical performance as specified in the certification standards for this type of equipment, recertification of this model shall be required before placing in operation.

*In accordance with Version 1.0B High Data Rate Certification dated March 15, 2000 and per NESDIS Specification Nos. 23.010 and 23.012, dated November 16, 1981, for Domestic Random Reporting and Self-timed modes of operation at 100bps.

Director, Office of Systems Development

Signature

November 3, 2000
Date

NOAA Form 83-1
(6-80)

GOES/RADIO SET CERTIFICATION

U.S. Department of Commerce
National Oceanic and Atmospheric Administration