APPENDIX A

WALLOPS VAS S/DB

MODE AA OUTPUT FORMAT

REVISION 8

CONTENTS

TITLE		PAGE
INTRODUCTION		1
PN SEQUENCE FOR SYNCHRONIZATION		3
IR DOCUMENTATION AND EOLC		5
IR COMMON DOCUMENTATION -	SECTION 1 - GENERAL	10
	SECTION 2 - MSI/DS	28
	SECTION 3 - CALIBRATION	40
	SECTION 4 - SCHEDULE	48
VISIBLE DOCUMENTATION		56

INTRODUCTION

The VAS S/DB at the Wallops Island Command and Data Acquisition (CDA) Station accepts real time data from the spacecraft at 14/28 Mbps and outputs this data in the mode AA format.

The mode AA format shown in Figure 1, is divided into sectors; 8 visible sectors of 36° each, 2 IR sectors of 21.7^{o} each, and one Pre-IR sector of 28.6^{o}. During the transmission of the direct data from the spacecraft (28/14 MBS), retransmitted SVAS data from the S/DB is ignored by the spacecraft. Therefore, the output format must have a portion where no useful data is being conveyed. This portion called Pre-IR or Earth View, must be at least as large as the duration of the direct transmission. For GOES-D the direct transmission for 28/14 MBS can occur from -12.6^{o} to $+10.6^{o}$ for a total of 23.2^{o} well within the 28.6^{o} allocated for Pre-IR in the AA format.

The two IR channels will be output as 10 bit words during a spacecraft rotation angle of 43.4^{o}. It is divided into two parts, Channel 1 and Channel 2, of 21.7^{o} each. The formats for each channel are identical; however, the information content is different. Each channel consists of:

a) PN Sequence for Synchronization
b) Documentation to define the IR1 or IR2 parts
c) IR1 or IR2 video
d) End-of-Line-Code (EOLC)
e) Common Documentation

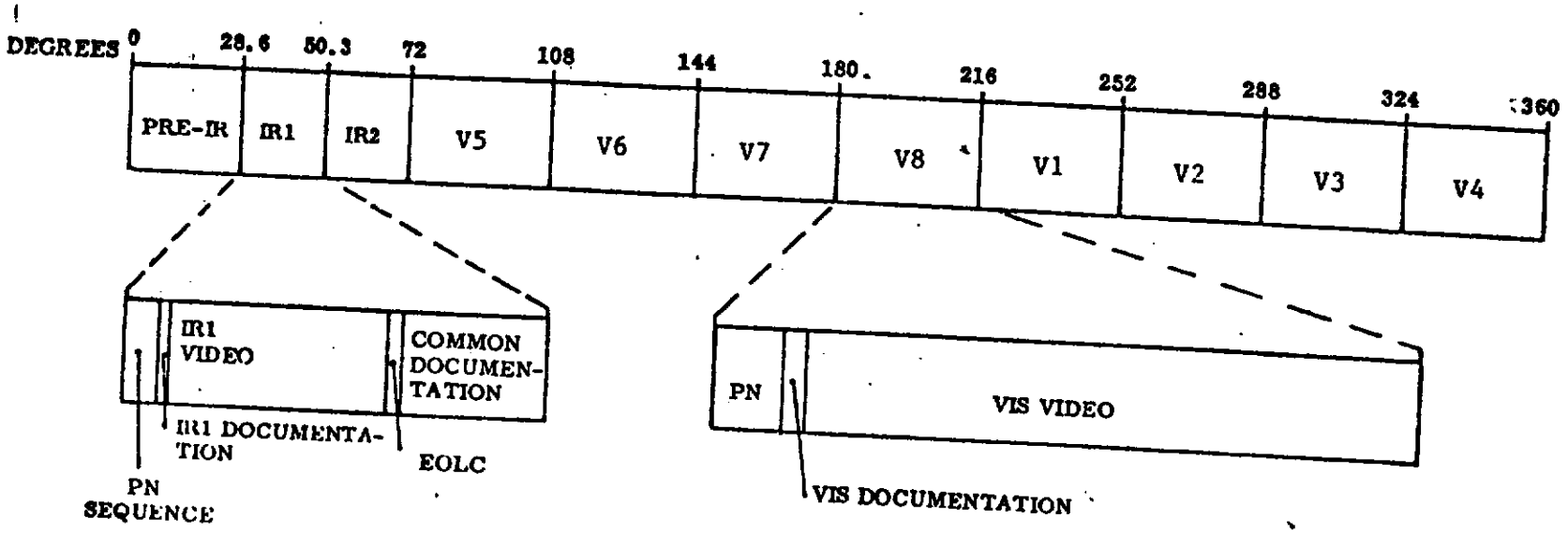

	IR1 AND IR2	VISIBLE (PER SECTOR)
TIME INTERVAL @ 100 RPM	36.2 ms	60
BITS/SAMPLE	10	6
BIT RATE @ 100 RPM	1747200	1747200
INITIAL SYNC (WORDS)	424	1672
IR DOC	16	--
IR COMMON DOC	2048	--
VIS DOC	--	512
VIDEO (WORDS)	3822	15288
EOLC (WORDS)	8	--
TOTAL (WORDS)	6318	17472

Figure 1. Mode AA Format

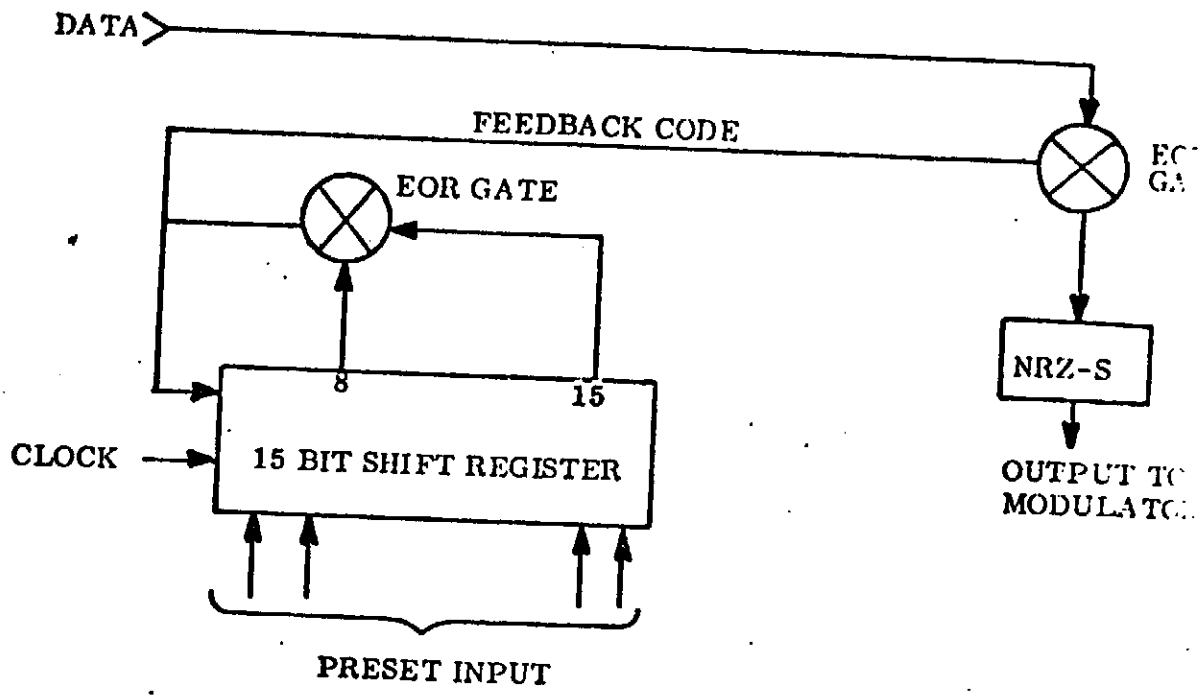

78-4044-32

Figure 2. Synchronization Encoding

IR DOCUMENTATION AND EOLC

The contents of the 16 word IR Documentation are listed in Table 1.

Although each IR documentation word employs 10 bits, the two most significant bits (MSB's) are identically zero except for words 1, 2 and 16. The MSB of each word is transmitted first and referred to as bit 6 with the least significant bit (LSB) designated as bit 15. The use of the dollar sign ($) signifies hexadecimal notation. The video word employs all 10 bits with zero representing the minimum VAS signal (black or cold) and 1023 representing the maximum (white or hot). The end of line code (EOLC) is composed of eight 10-bit words containing all zeros.

Table 1. Mode AA IR Documentation

Words 1, 2	Sector Code	Identifies IR1 and IR2. For IR1 word 1 = $14A and word 2 = $0AD; IR2 word 1 = $2B5 and word 2 = $352. This code permits the frame synchronizer to readily identify the proper IR or visible sector in the presence of bit errors.
Word 3	Frame Code	$FE indicates picture transmission; $01 indicates out-of-frame.
Word 4	Step Code	$FE indicates step; $01 indicates no-step.
Word 5	Predicted Header	In VISSR mode and output of auxiliary data $80, otherwise: (MSB) Bits 8, 9. Detector Type 00 = Small Hg Cd Te 01 = Large Hg Cd Te 11 = In Sb Bit 10, Step Scan Flag 1 = Step Scan On Bit 11, Filter Wheel Accuracy 1 = Ø≤2.5 0 = Ø>2.5 (LSB) Bit 12 - 15. Filter Wheel Position Same Coding as P2.
Word 6	MSI Code	$00 MSI Band A 01 MSI Band B 02 MSI Band C 03 MSI Band D 04 MSI Band E 05 MSI Band F 06 MSI Band G 07 MSI Band H 08 Dwell Sounding not valid out of frame
Word 7-8	Spare	, + (BFC)
Word 9	Phase	See word 2 of common documentation.

Rev D

Table 1. Mode AA IR Documentation (continued)

Word 10	Preframe Code	$FE indicates preframe status; $01 indicates non preframe status.
Words 11-13	Spare	Contents $00
Words 14-15	Calibrate Multiplier N_K	The calibrate multiplier is a 16 bit number contained within the 8 LSB's of words 14 and 15. The LSB of this number is the LSB of word 15. This number is a fraction between zero and one (scale factor zero) and normally represents $\frac{N_K}{(XR-XZ)} = N_K'$ The S/DB hardware multiplies each of the X_T samples by the calibrate multiplier number and outputs the 10 MSB's of the product as the video values. When this number equals 1 ($8000) the S/DB passes the IR samples to the output without amplitude modification.
Word 16	Parity	Odd parity - sum of bits in each column is odd for words 1-16. This word is the complement of the EOR of words 1-15.

IMAGE COUNT

IR COMMON DOCUMENTATION

Each IR Common Documentation Interval (2048 words) is divided into four groups, each with identical data content. Each group consists of four parts of 128 words each. These words each contain 10 bits; however, only the 8 LSB's will be used for documentation to help maintain compatibility with the current Mode A format. The first part (Section 1) will be similar to the mode A format IR documentation. The second part (Section 2) will include the VAS unique documentation data. The third part (Section 3) will contain calibration data while the last part (Section 4) will contain schedule information.

Each of these portions has a separate logitudinal parity word and the complete 512 word group is repeated four times in the IR1 common documentation interval and four times in the IR2 common documentation interval to permit error free detection at the mode AA receiver.

A description of the contents of the IR common documentation follows; see Figure 2.

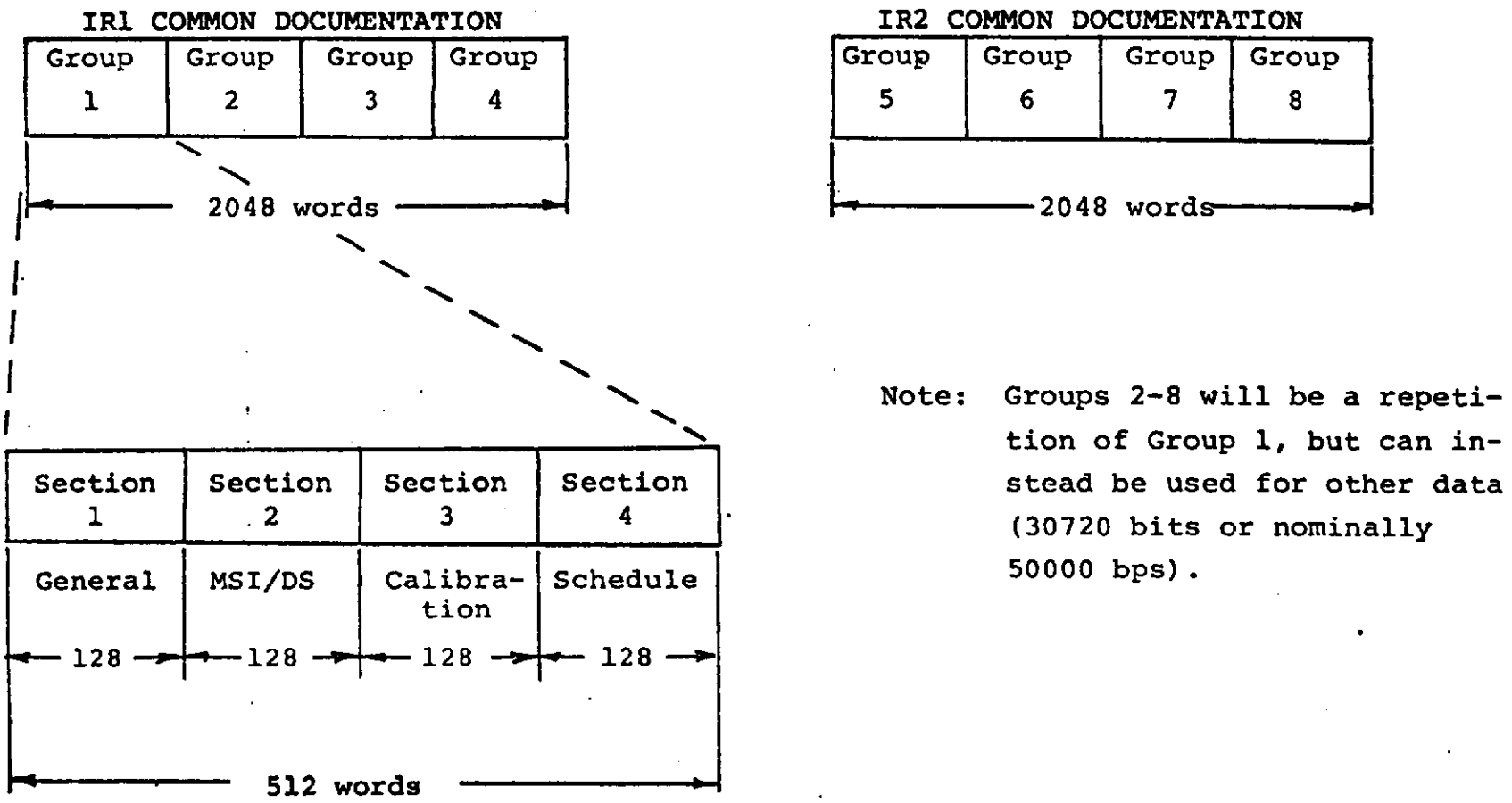

Figure 2. MODE AA COMMON DOCUMENTATION

WORD	8	9	10	11	12	13	14	15 (LSB)
1	RETRACE							
2	PHASE							
3	0	0	0	0	[illegible] NAME			
4	FRAME CODE							
5	PREDICTED HEADER							
6	STEP CODE							
7	RECORDER LINE DELAY							
8	IR1 SYNC	IR1 DATA	IR2 SYNC	IR2 DATA	0	0	IR SEL 1	IR SEL 2
9	GRAY SCALE/ANNOTATION							
10	DIRECT TRANSMISSION MODE							
11	~~SECTOR~~ IMAGE COUNT							
12	~~SECTOR~~ IMAGE COUNT							
13	TOTAL SCAN INCREMENT ERRORS							
14	MID	BETA (MSBS)						
15	BETA							
16	BETA (LSBS)							
17								
18	PLL ERROR							
19	PLL ERROR							0
20	BIT ERRORS							

VAS COMMON DOCUMENTATION - (SECTION 1)

	8	9	10	11	12	13	14	15 (LSB)
21	BIT ERRORS					0	0	0
22	REJECT ERRORS							
23	REJECT ERRORS							
	COMPUTER ERRORS							
24		.75	.55	.5	>366	OUT	IN2	IN1
		SCAN COUNT						
25	P	THOU			HUN			
	SCAN COUNT							
26	TEN				ONE			
27								
	TIME-YEAR							
28	TEN				ONE			
	TIME - MSEC				TIME - DAY			
29	ONE				HUN			
	TIME - DAY							
30	TEN				ONE			
	TIME - HOUR							
31	TEN				ONE			
	TIME - MINUTE							
32	TEN				ONE			
	TIME - SECOND							
33	TEN				ONE			
	TIME - MSEC							
34	HUN				TEN			
35	FRM	0	0	0	IMAGE COUNT (4 MSB's)			
36	IMAGE COUNT (8 LSB's)							
	HRDWR ERROR				BIT/FRAME SYNC			
37	SV	BTA	SUN	TAB	BRL	FRM	BIT	ANY
38						8/10	14/28	0
39	SAMPLE CONTROL							
40								

WORD	8	9	10	11	12	13	14	15 (LSB)
41	SCANNER DIRECTION							
42								
43	SCANNER SELECT							
44								
45	0	0	0	TEST				
				P	S	R	L	N
46	PLL STATUS 1							
	TC6	TC5	TC4	TC3	TC2	ACQ	RCQ	DAM
47	PLL STATUS 2							
	0	0	0	0	0	0	TRACK	
48	SECTOR COUNT							
49	SECTOR COUNT							
50	SP1	SP2	DIGITAL SUN COUNT					
51	DIGITAL SUN COUNT							
52	DIGITAL SUN COUNT							
53								
54	IR1 RIGHT HORIZON (MSBS)							
55	IR1 RIGHT HORIZON (LSBS)							
56	IR1 LEFT HORIZON (MSBS)							
57	IR1 LEFT HORIZON (LSBS)							
58	IR2 RIGHT HORIZON (MSBS)							
59	IR2 RIGHT HORIZON (LSBS)							
60	IR2 LEFT HORIZON (MSBS)							

VAS COMMON DOCUMENTATION - (SECTION 1)

WORD	8	9	10	11	12	13	14	15 (LSB)
61	IR2 LEFT HORIZON (LSBS)							
62	0	IR1 LINE DELAY						
63	0	IR2 LINE DELAY						
64	SPIN PERIOD							
65	SPIN PERIOD							
66	SPIN PERIOD							
67								
68								
69	RT PL	CAL IRVF	0	INC	RAW SCAN COUNT (4MSB)			
70	RAW SCAN COUNT (8 LSB)							
71	0	0	0	0	EQUAT SCAN COUNT (MSBS)			
72	EQUAT SCAN COUNT (LSBS)							
73								
74								
75								
76	UW Correct Messages							
77	UW Incorrect Messages							
78	GSFC Correct Messages							
79	GSFC Incorrect Messages							
80	PCM CODE WORD							
	0	0	CH	LK	MIN	FR	CNT	P

5 Proposed

VAS COMMON DOCUMENTATION - (SECTION 1)

WORD	8	9	10	11	12	13	14	15 (LSB)
81	(MSB) W1							
82	W1	W2						
83	W2	W3						
84	W3	W4						
85	W4	W5						
86	W5	W6						
87	W6	W7						
88	W7	W8						
89	W8							
90	W9							
91	W9	W10						
92	W10	W11						
93	W11	W12						
94	W12	W13						
95	W13	W14						
96	W14	W15						
97	W15	W16						
98	W16 (LSB)							
99	ORBIT & ATTITUDE BLOCK NUMBER							
100	O&A MINOR FRAME INDEX							

VAS COMMON DOCUMENTATION - (SECTION 1)

WORD	8	9	10	11	12	13	14	15 (LSB)
101	ORBIT & ATTITUDE							
102	WORD 1						(MFI = 1)	
103	OR WORD 7						(MFI = 2)	
104								
105	ORBIT & ATTITUDE							
106	WORD 2						(MFI = 1)	
107	OR WORD 8						(MFI = 2)	
108								
109	ORBIT & ATTITUDE							
110	WORD 3						(MFI = 1)	
111	OR WORD 9						(MFI = 2)	
112								
113	ORBIT & ATTITUDE							
114	WORD 4						(MFI = 1)	
115	OR WORD 10						(MFI = 2)	
116								
117	ORBIT & ATTITUDE							
118	WORD 5						(MFI = 1)	
119	OR WORD 11						(MFI = 2)	
120								

VAS COMMON DOCUMENTATION - (SECTION 1)

WORD	8	9	10	11	12	13	14	15
121	ORBIT & ATTITUDE							
122								
123	WORD 6							(MFI = 1)
124	WORD 12							(MFI = 2)
125								
126								
127	DOCUMENTATION CONFIGURATION							
128	LONGITUDINAL PARITY							

ONE = $FE

VAS COMMON DOCUMENTATION DESCRIPTION-(SECTION 1)

DATA		DOCUMENTATION WORD
Retrace		1
ONE indicates scanner moving at rate of 8-11 increments/spin		
Phase		2
Bit 8	1 = Preframe	
Bit 9	1 = PDL being transmitted	
Bit 10	1 = Initial verify mode	
Bit 11	1 = Initial verify temperatures have been determined	
Bit 12	1 = IR data for this scan was calibrated	
Bit 13	1 = Final verify mode	
Bit 14	1 = Final verify temperatures have been determined	
Bit 15	1 = Annotation or gray scale now being output	
S/C Name		3
Bits 8-11	Not Used	
Bits 12-15	S/C BCD Number — SAT #	
Frame Code $FE		4
ONE indicates picture transmission		
Predicted Header		5
Bits 8-9	Detector Size and Type	
	00 - Small HgCdTe	
	01 - Large HgCdTe	
	11 - InSb	
Bits 10	Step Scan Flag — ON THE FIRST SPIN OF LAST SCAN (?)	
	1 = Step Scan On	
	0 = Step Scan Off	
Bits 11	Filter Wheel Position Accuracy	
	1 = ($\Delta\theta \leq 2.5^\circ$)	
	0 = ($\Delta\theta > 2.5$)	

DATA	DOCUMENTATION WORD
Bits 12-15 Filter Wheel Postion	
0000 = Spectral Band 1	
1011 = Spectral Band 2	
0100 = Spectral Band 3	
0010 = Spectral Band 4	
1010 = Spectral Band 5	
0110 = Spectral Band 6	
0101 = Spectral Band 7	
1000 = Spectral Band 8	
0001 = Spectral Band 9	
0111 = Spectral Band 10	
0011 = Spectral Band 11	
1001 = Spectral Band 12	
Step Code - VISSR MODE	6
ZERO indicates that this line is not to be used to expose film and fascimile recorder line is not to be incremented (stepped).	
ONE indicates normal line transmission.	
- VAS MODES	
ONE indicates successful completion of check procedure.	
Recorder Line Delay (D)	7
Bits 12-15 IR1	
Bits 8-11 IR2	
IR Selection/Header Status	8
Bit 15 1 = IR1	
Bit 14 1 = IR2	
Bit 12-13 Spare	

DATA		DOCUMENTATION WORD
Bit 11	1 = IR2 Data Bits agree with predicted header	
Bit 10	1 = IR2 Sync Bits found	
Bit 9	1 = IR1 Data Bits agree with predicted header	
Bit 8	1 = IR1 Sync Bits found	
Gray Scale/Annotation		9
	0E for gray scale; E0 for annotation, 00 for neither	
Direct Transmission Mode		10
	ONE indicates 28 MBPS; ZERO indicates 14 MBPS;	
Sector Count	The sector count is a 16 bit number contained within the 8 LSB's of words/1 and /2. The LSB of this number is the LSB of word/2. The sector count will be a sequential number modulo 65536. The count will be incremented for each IR1 starting with 0 for the first IR1 output after the S/DB program is loaded; the second output (IR1) will have number 1. This number is intended to permit the mode AA receive equipment to detect gaps in the data.	11-12
~~Spare~~ Total Scan Increment Errors (in frame)		13
Beta Count	(not including θ_n)	
Bit 8	Midnite Bit (1 = Midnite Mode)	
Bit 9-15	(7 MSBS)	14
Bits 8-15	(8 Mid)	15
Bits 8-15	(8 LSBS)	16
Spare		17
PLL Error		
Bit 8-15	(8 MSBS)	18
Bit 8-14	(7 LSBS)	19
Bit 15	Not Used	19

Image count here

moved to 48+49

DATA		DOCUMENTATION WORD
Bit Errors (PN Count ~~in 2.5 MBPS Mode~~)		
Bits 8-15	(8 MSBS)	20
Bits 8-12	(5 MSBS)	21
Bits 13-15	Not Used	21
Reject Errors		
Bit 8	1 = Interrupt Disable	22
Bit 9	1 = Command	
Bit 10	1= PCM Data	
Bit 11	1 = Sync Data	
Bits 12-15	Spare	
Bit 8	1 = IOP Setup	23
Bit 9	Spare	
Bit 10	1 = Interrupt Enable	
Bit 11	1 = Timing (Programmed Output Channel)	
Bit 12	1 = Visible Lookup Table	
Bit 13	1 = KYBD - Keyboard	
Bit 14	1 = Teletype	
Bit 15	1 = MAG Tape	
Computer Errors		24
Bit 8	Not Used	
Bit 9	Not Used	
Bit 10	1 = Delta Time > 13 Hours	
Bit 11	1 = Delta Time > 12 Hours	
Bit 12	1 = Real Day > 366	
Bit 13	1 = IR Output Transfer Error	
Bit 14	1 = IR2 Input Transfer Error	
Bit 15	1 = IR1 Input Transfer Error	

DATA		DOCUMENTATION WORD
Scan Count		
BCD value split into 2 characters/word		
Bit 8	1 = Word Zero Parity Error	25
Bit 9-15	2 most significant BCD characters	25
Bit 8-15	2 least significant BCD characters	26
Spare		27
Time - BCD		
Year - 2 LSD		28
Milliseconds (Ones) (Bits 8-11)		29
Day of Year - 1 MSD (Bits 12-15)		29
Day of Year - 2 LSD		30
Hour		31
Minute		32
Second		33
Millisecond (Hundreds-Tens)		34
Count (MSB) (number of spins for which step scan flag = 1; processor-off mode only)		
Bit 8	1 = Single Scan	35
	0 = Normal Scan	35
Bits 9-11	Not Used	35
Bits 12-15	Image (4 MSB's)	35
Bits 8-15	Image (8 LSB's)	36
Hardware Errors		37
Bit 8	1 = Stretched Video Error	
Bit 9	1 = Beta Error	
Bit 10	1 = Sun Pulse Error	
Bit 11	1 = Table Lookup Error	
Bit 12	1 = Bit Freq Lock	
Bit 13	1 = Frame Lock	
Bit 14	1 = Bit Lock	
Bit 15	1 = Any Lock	
Mode		38
Bit 8-12	Not Used	
Bit 13	1 = 8 bit 0 = 10 bit	
Bit 14	1 = 14 Mbps 0 = 28 Mbps	
Bit 15	Not Used	

DATA	DOCUMENTATION WORD
Sample Control	39
ONE indicates EQUAL TIME	
ZERO indicates EQUAL ANGLE	
Spare	40
Scanner Direction	41
ONE indicates normal north-south direction	
Spare	42
Scanner Select	43
ONE indicates PRIMARY	
Spare	44
Test	45
Bit 8-10 Not Used	
Bit 11 1 = Precess	
Bit 12 1 = Self	
Bit 13 1 = Remote	
Bit 14 1 = Local	
Bit 15 1 = Normal	
Phase Lock Loop Status #1	46
Bit 8 1 = Time Constant 6	
Bit 9 1 = Time Constant 5	
Bit 10 1 = Time Constant 4	
Bit 11 1 = Time Constant 3	
Bit 12 1 = Time Constant 2	
Bit 13 1 = Acquisition	
Bit 14 1 = Reacquisition	
Bit 15 1 = Digital Acquisition Mode	
Phase Lock Loop Status #2	47
Bits 8-13 Not Used	
Bits 14-15 0 = Analog Tracking Mode	
1 = Digital LSB	
2 = Digital ALL	

DATA	DOCUMENTATION WORD
~~Spare~~ Solar Count	48-49
Digital Sun Pulse	
Bits 8-9 Two Spare Bits	50
Bits 10-15 (6 MSBS)	50
Bits 8-15 (8 Mid)	51
Bits 8-15 (8 MSBS)	52
Spare	53
IR1 Right Horizon Point	
(8 MSBS)	54
(8 LSBS)	55
If no detected horizon:	
Word 54 = ~~ONE~~ F 16	
Word 55 = ~~ONE~~ FF 16	
IR1 Left Horizon Point	
(8 MSBS)	56
(8 LSBS)	57
If no horizons are detected:	
Word 56 = ~~ONE~~ F 16	
Word 57 = ~~ONE~~ FF 16	
IR2 Right Horizon	58-59
IR2 Left Horizon	60-61
IR1 Line Delay (U)	62
Bit 8 Not Used	
Bits 9 -15 IR1 Line Delay	

DATA		DOCUMENTATION WORD
IR2 Line Delay (U)		63
Bit 8	Not used	
Bits 9-15	IR2 Line Delay	
Spin Period		64-66
LSB = .2 usec		
Spare		67-68
Raw Scan Count		69-70
Bit 8=1	, Real Time Program Load	
Bit 9=1	, Calibration or IR verify	
Bits 10-11	Not Used, Inc = 1 for scan count error	69
Bits 12-15	Raw Scan count (4 MSBS)	69
Bits 8-15	Raw Scan count (8 MSB's)	70
Equatorial Scan Count		71-72
Spare		73-75
UW Correct Messages		76
Number of correct messages received from UW since last common documentation output		
UW Incorrect Messages		77
Number of incorrect (error) messages received from UW since last common documentation output		
GSFC Correct Messages		78
GSFC Incorrect Messages		79

Imposed

DATA	DOCUMENTATION WORD
PCM TLM Code Word	80

MSB → A B C D E F G H ← LSB

A = B = 0

C = 1, D = 0 indicates frame sync in CHECK 2

C = 0, D = 1 indicates frame sync in CHECK 1

C = D = 1 indicates frame sync in LOCK

C = D = 0 indicates frame sync in SEARCH

Minor Frame Count

E	F	G	
0	0	0	First 1/4 TLM Frame N
0	0	1	Second 1/4 TLM Frame N
0	1	0	Third 1/4 TLM Frame N
0	1	1	Fourth 1/4 TLM Frame N
1	0	0	First output without TLM data
1	0	1	Second output without TLM data
1	1	0	Third output without TLM data
1	1	1	Fourth or larger output without TLM data

H, the parity bit, is the exclusive OR of B, D, and F.

DATA	DOCUMENTATION WORD
PCM TLM Data	81-98
If Minor Frame Count = 0 First 1/4 TLM Data	
If Minor Frame Count = 1 Second 1/4 TLM Data	
If Minor Frame Count = 2 Third 1/4 TLM Data	
If Minor Frame Count = 3 Fourth 1/4 TM Data	
The TLM frame, which consists of 64-9 bit words, will be packed into documentation in 8 bit bytes. Therefore, 1/4 of TLM frame consists of 16-9 bit words (W1 to W16) which are stored and output as 18-8 bit words. MSB is in leftmost position.	
Orbit and Attitude Data	99-124
See following tables; the block number remains fixed for two spins during which the minor frame index (MFI) takes on successive values 1 and 2; the block number then increments.	
Spares	125-126
Documentation Configuration	127
0 is Baseline	
1 is Revision A	
2 is Revision B	
3 is Revision C, etc.	
Longitudinal Parity	128
Complement of exclusive- or of first 127 words.	

S/DB ORBIT AND ATTITUDE DOCUMENTATION

S/DB Documentation Words	O & A Word Number	1	3	5	7	9	11	13	15	17	
99	Block Number*	$01	$02	$03	$04	$05	$06	$07	$08	$09	$
100	Minor Frame Index*	**	**	**	**	**	**	**	**	**	*
									Hour min sec		
101 - 104	1	DATE1	SPER	EST	CBO	CXO	CYO	CZO	EPH	-	-
105 - 108	2	TIME1	SPRA1	EET	CB1	CX1	CY1	CZ1	SMA	- SPRA2	S
109 - 112	3	-	SPDC1	FPER	CB2	CX2	CY2	CZ2	ECC	- SPDC2	S
113 - 116	4	-	ZETA	TC	CB3	CX3	CY3	CZ3	INC	-	-
117 - 120	5	-	RHO	CEO	CB4	CX4	CY4	CZ4	MA	-	-
121 - 124	6	-	ETA	CE1	CB5	CX5	CY5	CZ5	AP	-	-
101 - 104	7	X1	GAMMA	CE2	CB6	CX6	CY6	CZ6	RAN	X2	-
105 - 108	8	Y1	NAMES	CE3	CB7	CX7	CY7	CZ7	-	Y2	-
109 - 112	9	Z1	ID	CR0	CB8	CX8	CY8	CZ8	-	Z2	-
113 - 116	10	VX1	SRA1	CR1	CB9	CX9	CY9	CZ9	-	VX2	SRA2 S
117 - 120	11	VY1	SDC1	CR2	PNL	CX10	CY10	CZ10	-	VY2	SDC2 S
121 - 124	12	VZ1	GRA1	CR3	RNL	-	-	EPY	-	VZ2	GRA2

* Block number = Minor frame index = $00 if O&A data not present; $ implies hexadecimal notation.

** Minor Frame Index = $01 if O&A Word Number is less than 7; MFI = $02 otherwise

S/DB ORBIT AND ATTITUDE DOCUMENTATION

NAME	UNIT*	DESCRIPTION
DATE1	$YYDDD_{10}$ in binary	Date for TIME1; DATE1 $\leq$ 99366
TIME1	seconds * 100	Epoch (GMT); TIME1 < 864×10^4
TIME2	seconds * 100	Not documented; TIME1 + 468×10^4 ?
XN YN ZN	km * 2^{13}	Satellite position at TIMEN in inertial coordinate system of date; N = 1 or 2
VXN VYN VZN	(km/hour) * 2^{13}	Satellite velocity at TIMEN
SPER	μsec	Satellite spin period with respect to the earth at epoch
SPRAN	degrees * 2^{21}	Spin axis right ascension at TIMEN
SPDCN	degrees * 2^{21}	Spin axis declination at TIMEN
ZETA RHO ETA GAMMA	degrees * 2^{21}	VISSR alignment coordinates; ZETA = line bias, RHO = element bias, ETA = skew bias and GAMMA = sun pulse to VISSR angle.
NAMES	coded	Most significant byte (8 bits) contains source of O&A data 2 = UW, 3 = GSFC; next byte contains S/C name 1 = GOES-D, 2 = GOES-E, 4 = GOES-F; least significant 16 bits contain the serial number of the O&A data.
ID	coded	Code to specify method used for O&A determinatio
SRAN	degrees * 2^{21}	Sun right ascension at TIMEN
SDCN	degrees * 2^{21}	Sun declination at TIMEN
GRAN	degrees * 2^{21}	Greenwich right ascension at TIMEN
EST	seconds * 100	Eclipse start time on DATE1
EET	seconds * 100	Eclipse end time on DATE1
FPER	microsecond	Satellite spin period with respect to sun at epoch plus 6.5 hours (neglecting eclipse effects
TC	seconds	Eclipse thermal time constant
CEI	scan steps	Chebyshev equat parameters; I=0, ..., 3. Represe S/DB scan count at which earth disk center is scanned.

---

* All data is shown as an integer generated by multiplication by a factor to preserve the required resolution. For example, the quantity ZETA in degrees was multiplied by 2^{21} and the integ part of the product is shown in the O&A documentation. Thus the angle 10.0001 degrees is represented as 20973617.

CRI	msec * 100	Chebyshev retransmission parameters; I=0,. . . , 3 represents time for signal to propagate from CDA station to satellite.
CBI	degrees * 273 * 2^{11}	Chebyshev Beta parameters; I=0, ..., 9
	$(273 \times 2^{11} = \frac{6289920}{360} * 2^5)$	
PNL	integer	Primary scanner north limit
RNL	integer	Redundant scanner north limit
CXI CYI CZI	km * 2^{13}	Chebyshev position parameters; I=0, ..., 10
EPY	YYMMDD (year,month,day)	Epoch time for keplerian elements
EPH	HHMMSS (hour, minute, second)	
SMA	km * 100	semi-major axis
ECC	unit less * 1000000	Eccentricity
INC	Degree * 1000	Inclimation
MA	Degree * 1000	Mean Anomoly
AP	Degree * 1000	Argument of Perigee
RAN	Degree * 1000	Right Ascension of Ascending Node

} See note be

Note: The keplerian Elements described above are generated by the NOAA "VISSR Image Registration anf Gridding System" (VIRGS) and are documented here for use by similar systems.

WORD	8	9	10	11	12	13	14	15 (LSB)
1								
2	PN BIT COUNT							
3	PN BIT COUNT					0	0	0
4	0	0	0	PHASE CORRECTION (MSBS) (ψ_n)				
5	PHASE CORRECTION (LSBS) (ψ_n)							
6	PHASE CORRECTION COMPONENT (θ_n)							
7	FREQUENCY CORRECTION (MSBS) γ_n							
8	FREQUENCY CORRECTION (LSBS) γ_n							
9	IR1 INTEGER SENSOR SPACING							
10	IR1 REMAINDER SENSOR SPACING							
11	IR2 INTEGER SENSOR SPACING							
12	IR2 REMAINDER SENSOR SPACING							
13	0	0	0	0	(MSBS)			
14	RETRANSMISSION DELAY (LSBS)							
15								
16								
17								
18								
19								
20	ACTUAL RECEIVED IR1 HEADER							

VAS COMMON DOCUMENTATION - (SECTION 2)

WORD	8	9	10	11	12	13	14	15 (LSB)
21	ACTUAL RECEIVED IR2 HEADER							
22	SYNC	DATA	VAS PROGRAM LOAD PL	DP	1S	1D	2S	2D
23	SUBMODE							
24	VERSION				0	0	VS MODE	MSI DS
25	MSI BAND A				MSI BAND B			
26	MSI BAND C				MSI BAND D			
27	MSI BAND E				MSI BAND F			
28	MSI BAND G				MSI BAND H			
29	0	0	0	0	0	0	0	MSI 8 SZ
30	0	0	0	0	0	DS MODE 1 NO. STEPS		
31	DS BAND 1 #SPINS							
32	DS BAND 2 #SPINS							
33	DS BAND 3 #SPINS							
34	DS BAND 4 #SPINS							
35	DS BAND 5 #SPINS							
36	DS BAND 6 #SPINS							
37	DS BAND 7 #SPINS							
38	DS BAND 8 #SPINS							
39	DS BAND 9 #SPINS							
40	DS BAND 10 #SPINS							

VAS COMMON DOCUMENTATION - (SECTION 2)

WORD	8	9	10	11	12	13	14	15 (LSB)
41	DS BAND 11 #SPINS							
42	DS BAND 12 #SPINS							
43	0	0	0	0	0	DS MODE 3 NO. STEPS		
44	DS MODE 2 DET SIZE							
	3	4	5	6	7	8	9	10
45	0	0	0	0	0	PWR	DIR	CAL
46	0	0	0	0	START LINE			
47	START LINE							
48	0	0	0	0	END LINE			
49	END LINE							
50	0	0	0	0	0	0	0	MUL
51	VAS SPARE							
52	VAS SPARE				0	0	0	0
53	IR GAIN	0	0	0	0	0	SMV	
54	SMV							PMV
55	PMV							
56	PASV							
57	PASV	SSV						
58	SSV	BB1V						
59	BB1V	BB2V						
60	BB2V	SCMV						

Binary Scan Cd.

WORD	8	9	10	11	12	13	14	15 (LSB)
61	SCMV					BTFV		
62	BTFV						BTAV	
63	BTAV							SCV
64	SCV							
65								
66								
67								
68	SPIN NUMBER							
69	LNG SIGN	LAT SIGN	LTG CEN	0	LAT	BCD	TEN	
70	LAT	BCD	ONE		LAT	BCD	TENTHS	
71	LONG	BCD	HUN		LONG	BCD	TEN	
72	LONG	BCD	ONE		LONG	BCD	TENTHS	
73								
125								
126								
127								
128	LONGITUDINAL PARITY							

VAS COMMON DOCUMENTATION DESCRIPTION - (SECTION 2)

DATA	DOCUMENTATION WORD
Spare	1
PN Bit Count	
Bits 8-15 8 MSBS	2
Bits 8-12 5 LSBS	3
Bits 13-15 Not Used	3
Phase Correction (ψ_n)	
Bits 8-10 Not Used	4
Bits 11-15 5 MSBS	4
Bits 8-15 8 LSBS	5
Phase Correction Component (θ_n)	6
Frequency Correction (γ_n)	7-8
IR1 Integer Sensor Spacing	9
IR1 Remainder Sensor Spacing	10
IR2 Integer Sensor Spacing	11
IR2 Remainder Sensor Spacing	12
Retransmission Delay	
Bits 8-11 Not Used	13
Bits 12-15 4 MSBS	13
Bits 8-15 8 LSBS	14

?

DATA		DOCUMENTATION WORD
Spares		15-19
Actual Received IR1 Header	H4, H3, H2, H1 see Pg 2-15 for definition	20
Actual Received IR2 Header		21
VAS Program Load		22
Bit 8	Bit 12. OR. Bit 14	
Bit 9	Bit 13. OR. Bit 15	
Bit 10	1 = VAS Program load (PL) in process (from load start until load complete, i.e., IR2 interrupt).	
Bit 11	1 = Data Present (if PL = 1, then real time data present; if PL = 0, then IR data present).	
Bit 12	1 = IR1 Sync Bit Error, i.e., 283 sync bits not found. (Data valid only if PL = 0 and DP = 1).	

only valid out of frame

DATA		DOCUMENTATION WORD
VAS Program Load (Continued)		22
Bit 13	1 = IR1 Data Bit Error, i.e., 184 program bits do not agree with command (data valid only if PL = 0 and DP = 1).	
Bit 14	1 = IR2 Sync Bit Error, i.e., 283 sync bits not found (real time data if PL = 1 and DP = 1).	
Bit 15	1 = IR2 Data Bit Error, i.e., 184 program bits do not agree with command (real time data if PL = 1 and DP = 1; IR data if PL = 0 and DP = 1).	
~~Spare~~ Submode	0 ~~[illegible]~~ MSI 1, 2, 3 } ~~[illegible]~~ DS submode } valid only in frame → step = 1 4 CAL	23 ↓ PDL
Mode		24
Bit 8-11 (NOT USED!)	Version - This is the PDL version number; each time the contents of the PDL are changed this number is incremented by one, modulo 16.	
Bits 12-13	Not Used	
Bit 14	1 = VAS Mode 0 = VISSR Mode } USED?	
Bit 15	1 = MSI 0 = DS	
MSI Band A & B		25
Bits 8-11	Band A	
Bits 12-15	Band B	

VAS COMMON DOCUMENTATION DESCRIPTION - (SECTION 2) (Continued)

VAS [illegible] DATA	DOCUMENTATION WORD
MSI Band C & D	26
MSI Band E & F	27
MSI Band G & H	28
MSI Band #8 IGFOV Size	29
Bits 8-14 Not Used	
Bit 15 1 = Large	
0 = Small	
DS Sub-Mode #1 Number of Dwells	30
Bits 8-12 Not Used	
Bits 13-15 000 = 1 dwell	
011 = 8 dwells	
DS Sub-Mode #2 Band #1 Number of Dwell Spins	31
Bits 8-15 00000000 = skip Band	
01111111 = 255 spins	
DS Sub-Mode #2 Number of Dwell Spins Band #2	32
DS Sub-Mode #2 Band #3 Number of Dwell Spins	33
DS Sub-Mode #2 Band #4 Number of Dwell Spins	34
DS Sub-Mode #2 Band #5 Number of Dwell Spins	35
DS Sub-Mode #2 Band #6 Number of Dwell Spins	36
DS Sub-Mode #2 Band #7 Number of Dwell Spins	37
DS Sub-Mode #2 Band #8 Number of Dwell Spins	38
DS Sub-Mode #2 Band #9 Number of Dwell Spins	39
DS Sub-Mode #2 Band #10 Number of Dwell Spins	40
DS Sub-Mode #2 Band #11 Number of Dwell Spins	41

DATA		DOCUMENTATION WORD
DS Sub-Mode #2 Band #12 Number of Dwell Spins		42
DS Sub-Mode #3 Number of Steps		43
Bits 8-12	Not Used	
Bits 13-15	000 = 1 step	
	111 = 8 steps	
DS Sub-Mode #2		44
	0 = small 1 = large	
Bit 8	Band #3 IGFOV size	
Bit 9	Band #4 IGFOV size	
Bit 10	Band #5 IGFOV size	
Bit 11	Not Used	
Bit 12	Band #7 IGFOV size	
Bit 13	Band #8 IGFOV size	
Bit 14	Band #9 IGFOV size	
Bit 15	Band #10 IGFOV size	
Logic Signals		45
Bits 8-12	Not Used	
Bit 13	DS Visible Channel PMT Power ON/OFF (DS sub-mode #2)	
	0 = ON 1 = OFF	
Bit 14	Frame Scan Direction South-North	
	1 = South to North ?	
	0 = North to South	
Bit 15	Electronics Calibration ON/OFF	
	0 = OFF 1 = ON	
Frame Start Line Number (S/DB numbering system (processed))		
Bits 8-11	Not Used	46
Bits 12-15	4 MSBS	46
Bits 8-15	8 LSBS	47

VAS COMMON DOCUMENTATION DESCRIPTION - (SECTION 2) (Continued)

DATA			DOCUMENTATION WORD
Frame End Line Number (S/DB numbering system)			
Bits 8-11	Not Used (processed)		48
Bits 12-15	4 MSBS		48
Bits 8-15	8 LSBS		49
DS Multiplex Mode			
Bits 8-14	Not Used		50
Bit 15	1 = ON		
	0 = OFF		
VAS Spare Bits			
Bits 8-15	8 MSB's of VAS spare		51
Bits 8-11	4 LSB's of VAS spare		52
Bits 12-15	Not Used		52
VAS Temperatures			
Bit 8	IR Channels Gain State		53
	0 = 6.8 dB		
	1 = 0 dB		
Bit 9-13	Not Used		53
Bits 14-15	Secondary Mirror Temp (2 MSBS)	T_1	53
Bits 8-14	Secondary Mirror Temp (7 LSBS)		54
Bit 15	Primary Mirror Temp (1 MSB)	T_2	54
Bit 8-15	Primary Mirror Temp (8 LSBS)		55
Bit 8-15	Primary Mirror Aperature Stop Temp (8 MSBS)	T_3	56
Bit 8	Primary Mirror Aperature Stop Temp (1 LSB)		57
Bits 9-15	Secondary Mirror Shield Temp (7 MSBS)	T_4	57
Bits 8-9	Secondary Mirror Shield Temp (2 LSBS)		58
Bits 10-15	Black Body Temp #1 (6 MSBS)	T_5	58
Bits 8-10	Black Body Temp #1 (3 LSBS)		59

VAS COMMON DOCUMENTATION DESCRIPTION - (SECTION 2) (Continued)

	DATA	DOCUMENTATION WORD	
VAS Temperatures (Continued)			
Bits 11-15	Black Body Temp #2 (5 MSBS)	T_6	59
Bits 8-11	Black Body Temp #2 (4 LSBS)		60
Bits 12-15	Scan Mirror Temp (4 MSBS)	T_7	60
Bits 8-12	Scan Mirror Temp (5 LSBS)		61
Bits 13-15	Baffle Tube Forward End Temp (3 MSBS)	T_8	
Bits 8-13	Baffle Tube Forward End Temp (6 LSBS)		62
Bits 14-15	Baffle Tube Aft End Temp (2 MSBS)	T_9	62
Bits 8-14	Baffle Tube Aft End Temp (7 LSBS)		63
Bit 15	Shutter Cavity Temp (1 MSB)	T_{10}	63
Bits 8-15	Shutter Cavity Temp (8 LSBS)		64

DATA		DOCUMENTATION WORD
Spare		65-67
Spin Number (DS ~~only~~) DS only		68
Current Spin Number with specified band (Ø-255) 1 In SM1 $3 counts steps		
Latitude-Longitude		69-72
Bit 8	Longitude Sign 1=Neg	69
Bit 9	Latitude Sign 1=Neg	69
Bit 10	1=LTG 0=CEN	69
Bit 11	Not Used	69
Bit 12-15	Latitude BCD Tens	69
Bit 8-11	Latitude BCD Ones	70
Bit 12-15	Latitude BCD Tenths	70
Bit 8-11	Longitude BCD Hundreds	71
Bit 12-15	Longitude BCD Tens	71
Bit 8-11	Longitude BCD Ones	72
Bit 12-15	Longitude BCD Tenths	72
Spares		73-127
Longitudinal Parity		128
Complement of exclusive-or of previous 127 words		

WORD	8	9	10	11	12	13	14	15 (LSB)
1	IR PROCESSED TEMP A							
2								
3	IR PROCESSED TEMP B							
4								
5	IR PROCESSED TEMP C							
6								
7	PCM PROCESSED TEMP A							
8								
9	PCM PROCESSED TEMP B							
10								
11	PCM PROCESSED TEMP C							
12								
13	X_{R_1} = SHUTTER RADIANCE							
14								
15	X_{R_2} SHUTTER RADIANCE							
16								
17	X_{Z1EAST} DEEP SPACE							
18								
19	X_{Z1WEST} DEEP SPACE							
20								

WORD	8	9	10	11	12	13	14	15 (LSB)
21	X_{Z2EAST} DEEP SPACE							
22								
23	X_{Z2WEST} DEEP SPACE							
24								
25	N_1 TOTAL RADIANCE							
26								
27	N_2 TOTAL RADIANCE							
28								
29	IR1-R1 MSB's		IR1-R2 MSB's					
30								
31							IR1-R12 MSB's	
32	IR1-R1 LSB's							
33	IR1-R2 LSB's							
.	.							
.	.							
.	.							
43	IR1-R12 LSB's							
44	IR2 RAW RADIANCE (see IR1 above)							
.								
.								
.								
58								
59	IR RADIANCE COUNT							
60	IR1 $Y_Z + Q$ MSB'S							
61	IR1 $Y_Z + Q$ LSB'S							
62	IR2 $Y_Z + Q$ MSB'S							
63	IR2 $Y_Z + Q$ LSB'S							

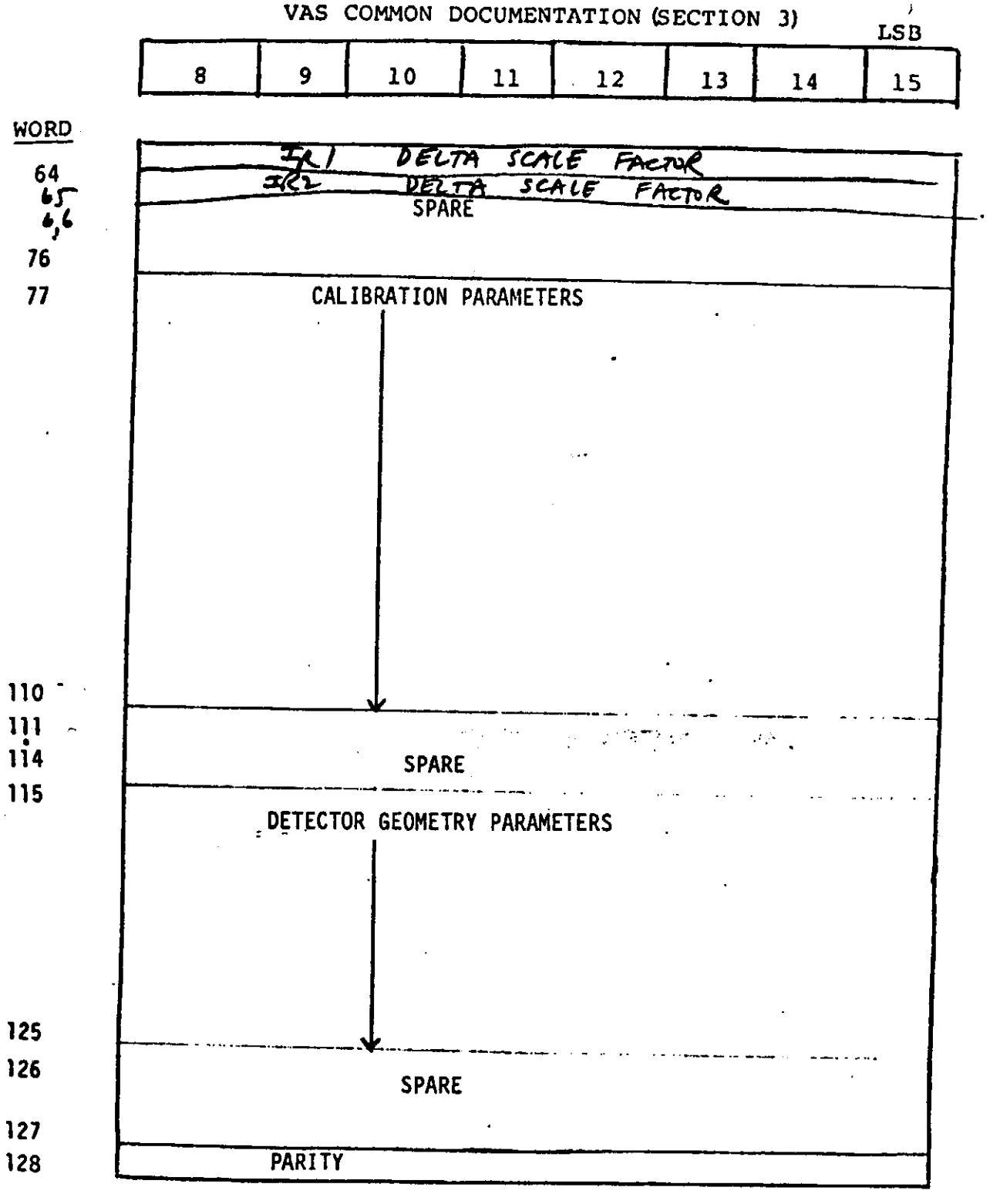
LSB
8
9
10
11
12
13
14
15
WORD
64
65
66
76
77
110
111
114
115
125
126
127
128
IR1 DELTA SCALE FACTOR
IR2 DELTA SCALE FACTOR
SPARE
CALIBRATION PARAMETERS
SPARE
DETECTOR GEOMETRY PARAMETERS
SPARE
PARITY

VAS COMMON DOCUMENTATION DESCRIPTION - (SECTION 3)

DATA	DOCUMENTATION WORD
IR Verify Processed Temperature A	1-2
IR Verify Processed Temperature B	3-4
IR Verify Processed Temperature C	5-6
PCM Processed Temperature A	7-8
PCM Processed Temperature B	9-10
PCM Processed Temperature C	11-12

SF6

Spin	A	B	C
1	T_1	T_2	T_3
2	T_4	T_5	T_6
3	T_7	T_8	T_9
4	T_{10}	CON	AUX

SPARE

All processed temperatures are synchronized with O&A data. O&A requires 20 spins and processed temperatures require 4 spins. When O&A Block=1 and MFI = 1, Processed temperatures are for spin 1. Five temperature sets of data are output during O&A output.

AUX is the digital number representing the 15 volt auxiliary power supply voltage used in the temperature computation.

CON is a two word control parameter on spin 4:

Words 3 and 9

Bit 8 1 = Use of B6; 0 = Use of A6
Bit 9 1 = Use of IR verify temp; 0 = Use of PCM temp
Bit 10-15 Spare

Words 4 and 10

Bits 8-15 Spare

DATA	DOCUMENTATION WORD
X_{R_1}	13-14
X_{R_2}	15-16

Radiance data is preprocessed, averaged, e bias subtracted, run thru video lookup table and linear interpolated using 5 bits of fraction. X_{R_1} and X_{R_2} are SF 0 normalized video. This data is documented with video from previous spin.

X_{Z1EAST}	17-18
X_{Z1WEST}	19-20
X_{Z2EAST}	21-22
X_{Z2WEST}	23-24

Video samples 8-41 (west) and 3782-3815 (east) are summed, largest and smallest subtracted (which is summation of 32 samples) before video is passed thru lookup table. This sum is then passed thru a lookup table and linear interpolated using 5 bits of fraction to produce X_Z.

X_Z is SF 0 normalized video

	DATA	DOCUMENTATION WORD
N_{K1}	IR1 total radiance	25-26
N_{K2}	IR2 total radiance	27-28
IR1	Raw Radiance MSB's Contains two most significant bits of signal produced by shutter reflection of internal blackbody. R1 is first sample of this signal. MSB of R1 is in bit 8 of word 29.	29-31
IR1	Raw Radiance LSB's 8 LSB's of sample R1 is in word 32.	32-43
IR2	Raw Radiance See definition above for words 29-43	44-58
IR	Radiance Count Number of good radiance samples obtained Bits 8-11 IR1 Bits 12-15 IR2	59
IR1	$Y_Z + Q$ $Y_Z + Q = \frac{X_Z \cdot N_K}{X_R - X_Z}$ } Scale factor 10	60-61 $Y_Z \approx$ MULTIPLY RESULT BY 2^1
IR2	$Y_Z + Q$	62-63
~~SPARE~~	IR1 DELTA SCALE FACTOR IR2 " " " SPARE	~~64-76~~ 64 IR1 ΔF 65 IR2 ΔF 66-76
CALIBRATION	These words are time multiplexed with a period of 20 spins and are synchronized with O&A data. When O&A Block = 1 and MFI = 1, the first 34 calibration bytes are output. See following table for definition of 680 calibration parameters.	77-110
SPARE		111-114
DETECTOR GEOMETRY	These words are time multiplexed with a period of 20 spins and are synchronized with O&A data. When O&A block = 1 and MFI = 1 the first 11 bytes of the detector geometry parameters are output. See following table for definition of 220 detector geometry parameters.	115-125
SPARE		126-127
LONGITUDINAL PARITY		128

CALIBRATION PARAMETERS

INFORMATION BYTE	NAME	DESCRIPTION
1-80	A_1 - A_{10}	TEMPERATURES CALIBRATION PARAMETERS
81-88	B_6	
89-90	ΔT	ACCEPTABLE TEMPERATURE CHANGE
91-92	$\Delta 15$	ACCEPTABLE +15V AUX VOLTAGE
93-94	AVN	NOMINAL +15V AUX VOLTAGE
95-96	SPARE	
97-192	C_1 - C_{12}	RADIANCE POLYNOMIAL COEFFICIENTS
193-200	C_{20}	
201-208	C_{22}	
209-216	C_{24}	
217-224	C_{29}	
225-232	C_{31}	
233-240	C_{36}	
241-248	C_{38}	
249-260	F_1 - F_{12}	RADIANCE POLYNOMIAL COEFFICIENTS
261	F_{20}	SCALE FACTORS
262	F_{22}	
263	F_{24}	
264	F_{29}	
265	F_{31}	
266	F_{36}	
267	F_{38}	
268-280	SPARE	
281-286	M_1 - M_3	RADIANCE WEIGHTING FACTORS
287-292	M_5 - M_7	
293-296	M_9 - M_{10}	
297-372	W_4	
373-448	W_8	
49-456	SPARE	

CALIBRATION PARAMETERS (continued)

INFORMATION BYTE	NAME	DESCRIPTION
457-464	G_7	THERMAL NONLINEARITY POLYNOMIAL COEFFICIENTS
465-584	G_K	K = 8, 9, 11, 12, 19, 20, 21, 23, 24, 28, 29, 30,35, 36, 37
585-592	V_1	VISIBLE NONLINEARITY POLYNOMIAL COEFFICIENTS
593-648	V_2-V_8	
649-650	E_1	IR1 14MPS SHUTTER RADIANCE OFFSET
651-652	E_2	IR1 28MBPS SHUTTER RADIANCE OFFSET
653-654	E_3	IR2 14 MBPS SHUTTER RADIANCE OFFSET
655-656	E_4	IR2 28MBPS SHUTTER RADIANCE OFFSET
657-660	NAMES	SOURCE/S/C NAME/SERIAL NUMBER
661-680	SPARE	

CALIBRATION

BYTE	NAME	DESCRIPTION
1-80	A_1 - A_{10}	Temperature Calibration

$A_i = (a_{i0}, a_{i1}, a_{i2}, a_{i3})$ where

a_{ij}: Temperature sensor calibration curve polynominal coefficient for normal state of sensor

$$T_i = \sum_{j=0}^{3} a_{ij} t_i^j$$

where T_i is temperature in ^oC for temperature sensor i as defined below:

T_1	Secondary Mirror
T_2	Primary Mirror
T_3	Primary Mirror Mask
T_4	Secondary Mirror Shield
T_5	Blackbody Sensor 1
T_6	Blackbody Sensor 2
T_7	Scan Mirror
T_8	Baffle Tube Forward
T_9	Baffle Tube Aft
T_{10}	Shutter Cavity

Also:

$$t_i = \frac{S_i}{AV}$$

where S_i is temperature sensor digital telemetry reading and AV is the digital telemetry reading for the state of the +15 volt auxiliary power supply.

Bytes 1-2 will contain a 16 bit integer a_{10}, bytes 3-4 will contain a_{11}, ..., bytes 79-80 will contain $a_{10,3}$. Negative numbers will be in two's complement form. The a_{ij} numbers will each have scale factor 7 which indicates that the binary point is located to the right of the 8th binary digit counting from the most significant bit (MSB) at the left. Thus, if the contents of bytes 3-4 is 11167, then a_{11} = 43.621 =

BYTE	NAME	DESCRIPTION
		$\frac{11167}{2^{15-7}}$. It is assumed that $0 \leq t_i < 2$ and that $\lvert a_{ij}\ t_i^j \rvert < 128$. It is further assumed the $\lvert T_i^{(m)} \rvert < 128$ for m = 1,2 and $\lvert T_i^{(m)} \rvert < 64$ for m = 3 where $T_i^{(m)} = \sum_{i=0}^{m} a_{ij}\ t_i^j$.
81-88	B_6	Temperature Calibration $B_6 = (b_{61}, b_{62}, b_{63}, b_{64})$ where b_{6j} is temperature sensor calibration curve polynominal coefficient for high state of sensor. B_6 is used in lieu of A_6 when selected. All b_{6j} numbers satisfy the conditions for the a_{ij} numbers.
89-90	ΔT	Acceptable PROC Temperature Change Each time a new temperature T_i is determined from the PCM data it is compared to the prior value of that temperature T_i'. If $\lvert T_i - T_i' \rvert > \Delta T$, T_i' will be used but T_i will be saved and used in the next ΔT comparison. If $\lvert T_i - T_i' \rvert \leq \Delta T$, T_i will be used. The ΔT scale factor is 6; thus the smallest increment to which ΔT can be specified is $0.002^{o}C$.
91-92	$\Delta 15$	Acceptable 15VPS Change Each time a new auxiliary voltage AV is determined from the PCM data it is compared to the prior value AV'. If $\lvert AV-AV' \rvert > \Delta\ 15$, AV' will be used but AV will be saved and used in the next $\Delta 15$ comparison; if $\lvert AV-AV' \rvert \leq \Delta\ 15$, AV will be used. The $\Delta 15$ scale factor is 15 which is an integer representation.
93-94	AVN	Nominal +15V Aux Voltage This number is used in lieu of AV when processing the verify mode temperatures (scale factor 15)

BYTE	NAME	DESCRIPTION
95-96	Spare	
97-248	C_1-C_{12}, C_{20}, C_{22}, C_{24}, C_{29}, C_{31}, C_{36}, C_{38}	Radiance Polynomial Coefficients $C_k = (c_{k0}, c_{k1}, c_{k2}, c_{k3})$ c_{kj}: Coefficients to compute radiance for band-detector k for object with temperature T_i

$$R_{ki} = \sum_{J=0}^{3} c_{kj}(T_i/64)^j$$

and R_{ki} is radiance from set k. The relation between k and the band-detectors is as shown in Table 1.

For C_i values not defined in bytes 97-248 use equivalence table below:

Undefined k Value	Equivalent k Value
13	1
14	2
15	3
16	4
17	5
18	6
19	7
21	9
23	11
25	3
26	4
27	5
28	7
30	9
32	3
33	4
34	5
35	7
37	9

Bytes 97-98 are used for c_{10}, etc; thus, bytes 97-104 are used for C_1 and bytes 241-248 are used for c_{38}. The C_k scale factors are discussed below.

Table 1. Order of ~~Filter Detector~~ Combinations

k	detector	size	location *	band
1	HgCdTe	L	U	1
2				2
3	3			3
4				4
5				5
6	InSb 5			6
7	HgCdTe			7
8				8
9	3			9
10				10
11	InSb			11
12	5			12
13	HgCdTe		L	1
14				2
15	4			3
16				4
17				5
18	InSb 6			6
19	HgCdTe			7
20				8
21	4			9
22				10
23	InSb			11
24	6			12
25	HgCdTe	S	U	3
26				4
27				5
28	1			7
29				8
30				9
31				10
32			L	3
33	2			4
34				5
35				7
36				8
37				9
38				10

* U or upper detector channel is also called IR1;
L or lower detector channel is also called IR2.

[illegible] memo on how to obtain exp/etc

BYTE	NAME	DESCRIPTION
		The c_{kj} coefficients are restricted so that $\sum_{j=0}^{m} \lvert c_{kj} \rvert < 1$ for m = 0, 1, 2, 3.
249-267	F_1-F_{12}, F_{20}, F_{22}, F_{24}, F_{29}, F_{31}, F_{36}, F_{38},	Radiance Polynomial Coefficient Scale Factors The number F_k is used with the C_k coefficients to denote their scale factor. Thus, if $F_1 = 6$ and the contents of bytes 97-98 is 13524, then c_{10} = 26.414. Byte 249 contains F_1, etc. $\Delta F * 8$
268-280	Spare	
281-296	M_1, M_2, M_3, M_5, M_6, M_7, M_9, M_{10}	Radiance Weighting Factors - Band Independent Used to compute N_k which is the total radiance from an equivalent blackbody for band-detector k.

$$N_k = \sum_{\substack{i=1 \\ i \neq 4,8,5,6}}^{10} M_i (R_{ki} - RLL) + \sum_{i=4,8} w_{ki} (R_{ki} - RLL) + RLL$$

$\frac{1}{2}[R_{k5} + R_{k6}]$

Bytes 281-282 are used for M_1, etc. The M_i scale factor is 0.

$$\sum_{\substack{i=1 \\ i \neq 4,8}}^{10} M_i + \sum_{i=4,8} W_{ki} = 1$$

297-448	W_4, W_8	Radiance Weighting Factors - Band Dependent

$$W_i = (w_{1i}, w_{2i}, \ldots, w_{38i})$$

Bytes 297-298 are used for w_{14}, bytes 299-300 for w_{24}, ..., bytes 371-372 for $w_{38,4}$; thus, W_4 is contained in bytes 297-372 and W_8 is contained in bytes 373-448. The W_i scale factor is 0.

449-456 Spare

[illegible] by 2^F; [illegible] < 1

BYTE	NAME	DESCRIPTION
457-584	G_7, G_8, G_9, G_{11}, G_{12}, G_{19}, G_{20}, G_{21}, G_{23}, G_{24}, G_{28}, G_{29}, G_{30}, G_{35}, G_{36}, G_{37},	Thermal Nonlinearity Polynomial Coefficients $G_k = (g_{k0}, g_{k1}, g_{k2}, g_{k3})$ where g_{kj} generates the nonlinearity polynomial curve for detector-band set k $$X_k = \sum_{j=0}^{3} g_{kj}(d/1024)^j$$ where X_k is the linearized version of the signal corresponding to a sample d. Bytes 457-458 are used for g_{70}, ..., bytes 463-464 are used for g_{73}; hence G_7 is contained in bytes 457-464. For G_k values not defined in bytes 457-584 use the equivalence table below:

Undefined k Value	Equivalent k Values
1	9
2	7
3	7
4	7
5	7
6	11
10	7
13	21
14	19
15	19
16	19
17	19
18	23
22	19
25	28
26	28
27	28
31	28
32	35
33	35
34	35
38	35

BYTE	NAME	DESCRIPTION
		The sample value d will be an integer 0, 1, ..., 1023. The computed result X_k will be a non-negative number less than 1 and will have scale factor 0 within the S/DB. Each of the g_{kj} coefficients will have scale factor 1 and the partial sums $\lvert g_{k0} + g_{k1} \rvert$ and $\lvert g_{k0} + g_{k1} + g_{k2} \rvert$ will be less than 2. It is desirable that the g_{kj} be selected to be as large as possible subject to the preceding constraints.
585-648	V_1-V_8	Visible Nonlinearity Polynomial Coefficients $V_Z = (\nu_{Z0}, \nu_{Z1}, \nu_{Z2}, \nu_{Z3})$ where ν_{Zj}: Nonlinearity polynomial curve for visible detector Z $Y_Z = \left\{ \sum_{j=0}^{3} \nu_{Zj} (d/64)^j \right\} 64$ where Y_Z is the linearized version of the signal corresponding to a sample d where d=0, 1, ..., 63. V_1 is contained in bytes 585-592. All comments above relating to g_{kj} also apply to ν_{Zj}. The computed results Y_Z will be a non-negative integer less than 64 and will have scale factor 15 within the S/DB.
649-656	E_1- E_4	Shutter Radiance Offset E_1 = 28 MBPS, upper detector E_2 = 28 MBPS, lower detector E_3 = 14 MBPS, upper detector E_4 = 14 MBPS, lower detector E_1 is contained in bytes 649-650. This offset is caused by the ramp added to the shutter radiance signal. This number will be subtracted from the average of the samples representing this radiance. Since the average will be computed and output by the S/DB with scale factor 10, this number should also have this scale factor.

BYTE	NAME	DESCRIPTION
657	Source	Coded source of calibration data. 2 = University of Wisconsin 3 = GSFC
658	S/C Name	Coded S/C Name 1=GOES-D, 2-GOES-E, 4=GOES-F
659-660	Serial No.	Serial number of calibration data.
661-680	Spare	

DETECTOR GEOMETRY PARAMETERS

BYTE	DESCRIPTION	
1-2	Q1	N-S SPACING
3 -76	Q2-Q38	
77-80	SPARE	
81-82	P1	E-W SPACING
83-156	P2-P38	
157-158	R1	
159-160	R2	E-W DELTA SPACING
161-162	R3	
163-164	R4	
165-166	R5	
167-168	R6	
169-170	H1	HORIZON THRESHOLD
171-192	H2-H12	
193-196	NAMES	SOURCE/S-C NAME/SERIAL NO.
197-198	DG1	DELTA GAMMA ANGLE
199-200	DG2	
201-202	DG3	
203-220	SPARES	

DETECTOR GEOMETRY

INFORMATION BYTE	NAME	DESCRIPTION
1-76	Q1-Q38	North-South Detector Spacing. For each detector-filter combination K, QK is the north-south deviation of the center of the field-of-view (FOV) from its nominal position. A northerly deviation will be positive; negative numbers will be in two's complement form. The quantity Q1 is contained in bytes 1-2. ~~The most significant byte of each 16 bit word will contain the integer number of the deviation in units of scan mirror steps~~ ($\frac{\pi}{214}$ rad ~ 196 μrad) and the least significant byte will contain the fraction. This is a scale factor 5 representation.
77-80	Spare	
81-156	P1-P38	East-West Detector Spacing. PK is the east-west spacing of the center of the field-of-views of the (northern most) visible detector V1 and the detector-filter combination K. A westerly deviation will be positive; negative numbers are not permitted. The quantity P1 is contained in bytes 81-82. Each 16 bit word will contain the integer number of this spacing in beta angle units ($\frac{2\pi}{6289920}$ rad ~ 1 μrad). This is a scale factor 15 representation.
157-168	R1-R6	East-West Delta Spacing. The S/DB will normally operate in the 28 MBPS equal angle (EA) mode and the PK quantities are expected to be measured in this mode. The S/DB may however be operated in one of three alternate modes: 14 MBPS EA, 28 MBPS ET (equal time) or 14 MBPS ET. Use of these alternate modes will introduce a small east-west bias in the handling of the IR data which will be corrected by use of the RN numbers. In the 14 MBPS EA mode the east-west detector spacing employed by the S/DB will be PK + R1 for K = 1-12, 25-31 and PK + R2 for the other K values. In the 28 MBPS ET mode the S/DB will employ PK + R3 for all K=1-12,25-31 and PK+R4 for the other K values. In the 14 MBPS ET mode the S/DB will employ PK+R5 for K=1-12,25-31 and PK+R6 for the other K values. Negative values for RN are permitted and

3rd from LSB in Most significant byte is integer

R0 = 0 28 Mbps EA
R1, R2 } 14MBPS EA { IR1, IR2
R3, R4 } 28MBPS ET { IR1, IR2
R5, R6 } 14MBPS ET { IR1, IR2

INFORMATION BYTE	NAME	DESCRIPTION
		will use two's complement notation. RN will have the same scale factor as PK. R1 is contained in bytes 157-158.
169-192	H1-H12	Horizon Threshold. The quantity HK is used by the S/DB to detect the east and west earth horizons as seen by band-detector set K. For HK values not defined in bytes 169-192 use the equivalence table below:

Undefined K Values	Equivalent K Values
13	1
14	2
15	3
16	4
17	5
18	6
19	7
20	8
21	9
22	10
23	11
24	12
25	3
26	4
27	5
28	7
29	8
30	9
31	10
32	3
33	4
34	5
35	7
36	8
37	9
38	10

DETECTOR GEOMETRY (continued)

INFORMATION BYTE	NAME	DESCRIPTION
		The HK is used as a threshold to compare with the X_k linearized signal values (see calibration description). Thus the scale factors of HK and X_k must be equal (scale factor 0) where HK is a number between 0 and 1.
193	Source	Coded source of detector geometry data. 2 = University of Wisconsin 3 = GSFC
194	S/C Name	Coded S/C Name 1 = GOES-D 2 = GOES-E 4 = GOES-F
195-196	Serial No.	Serial number of detector geometry data.
197-202	DG1-DG3	Delta gamma angle. This angle will be added to the beta prime angle computed from the chebyshev beta parameters in the O&A data. DG1 used with 14 MBPS EA, DG2 used with 28 MBPS ET, and DG3 used with 14 MBPS ET. Scaling of these numbers is the same as PK. Negative numbers are permitted and are represented in two's complement form. DG1 is contained in bytes 197-198.
203-220	Spares	

	8	9	10	11	12	13	14	15 (LSB)
1	CMD ENTRY CODE (MSD)							
2	CMD ENTRY CODE (LSD)							
3	COMMAND SOURCE							
4	COMMAND MNEMONIC							
5								
6								
7	COMMAND TIME							
8						(HUN. DAYS)		
9						(TEN-DAYS)		
10						(ONE-DAYS)		
11						(TEN-HRS)		
12						(ONE-HRS)		
13						(TEN-MIN.)		
14						(ONE-MIN)		
15						(TEN-SEC.)		
16	RUNOUT TIME					(ONE-SEC.)		
17						(TEN-HRS.)		
18						(ONE-HRS.)		
19						(TEN-MIN.)		
20						(ONE-MIN.)		
21						(TEN-SEC.)		
						(ONE-SEC.)		

	8	9	10	11	12	13	14	15 (LSB)
22	COMMAND STATUS							
23	FRAME START BIAS TIME							
24	VERSION				0	0	VS MODE	MSI DS
25	PROCESSOR PARAMETERS							
26	PROCESSOR PARAMETERS							
27	PROCESSOR PARAMETERS							
28	PROCESSOR PARAMETERS							
29	PROCESSOR PARAMETERS							
30	PROCESSOR PARAMETERS							
31	PROCESSOR PARAMETERS							
32	PROCESSOR PARAMETERS							
33	PROCESSOR PARAMETERS							
34	PROCESSOR PARAMETERS							
35	PROCESSOR PARAMETERS							
36	PROCESSOR PARAMETERS							
37	PROCESSOR PARAMETERS							
38	PROCESSOR PARAMETERS							
39	PROCESSOR PARAMETERS							
40	PROCESSOR PARAMETERS							

VAS COMMON DOCUMENTATION (SECTION 4)

	8	9	10	11	12	13	14	15 (LSB)
41	PROCESSOR PARAMETERS							
42								
43								
44								
45								
46								
47								
48								
49								
50								
51								
52	PROCESSOR PARAMETERS							
53	~~AVG SPINS PER STEP~~ TOTAL NUMBER OF							
54	SPINS PER FRAME							
55	~~SPARES~~							
56	~~CMD ENTRY SPARES CODE OF LAST~~ PDL CMD EXECUTION & CHANGE CODE							
57	~~APPD CMD SPACE STATUS~~ SPARE							
58	SPARE							
59								
60								

8/11/79

VAS COMMON DOCUMENTATION SECTION 4)

	8	9	10	11	12	13	14	15 (LSB)
61								
62								
63								
64								
65								
66								
67								
68								
69								
70								
71								
72								
73								
74								
75								
76	S P A R E S							
77	NEXT O&A							
78								
79								
80	NEXT O&A							

	8	9	10	11	12	13	14	15 LSB
81	NEXT O&A							
82								
83								
84								
85								
86								
87								
88								
89								
90								
91								
92								
93								
94								
95								
96								
97								
98								
99								
100	NEXT O&A							

	8	9	10	11	12	13	14	LSB 15
101	FUTURE O&A							
102								
103								
104								
105								
106								
107								
108								
109								
110								
111								
112								
113								
114								
115								
116								
117								
118								
119								
120	FUTURE O&A							

	8	9	10	11	12	13	14	LSB 15
121	FUTURE O&A							
122								
123								
124	FUTURE O&A							
125	O&A LOAD IN PROGRESS							
126								
127								
128	PARITY							

VAS COMMON DOCUMENTATION ~~DESCRIPTION~~ (SECTION 4)

Note: The first 52 words of this section contains data which is multiplexed in synchronism with the orbit and attitude data contained in section 1, words 99-124. Specifically it takes 20 spins to output one full group of data under control of the O&A block number and the O&A minor frame index. During each spin sufficient data is provided to describe a complete VAS image currently on the S/DB schedule. The function of this data is to permit each data user to plan his data acquisition schedule. ~~The first set of parameters represents the image currently being acquired, or if none is currently being acquired, the last image acquired.~~ The ~~following 19~~ 20 sets represent the next ~~19~~ 20 images scheduled at the time of the beginning of output of block 1 minor frame 1. This process repeats ever 20 spins (12 seconds) with the most recent data presented each time.

The first 21 words of this section use an 8 bit ASCII representation.

DATA	DOCUMENTATION WORD
Command Entry Code	
Most significant hexadecimal digit	1
Least significant hexadecimal digit	2
Command Source	3
G = GSFC	
W = Univ. of Wisconsin	
S = SOCC	
C = CDA	
Command Mnemonic	
Most significant ASCII Character	4
Middle significant ASCII Character	5
Least significant ASCII Character	6

DATA	DOCUMENTATION WORD
Command Time	7-15
ASCII Characters	
Runout Time	
ASCII Characters	16-21
Command Status	22
ASCII Character	
Blank = Satisfactory	
N = Command will not be executed	
Frame Start Bias	23
LSB = 1 second	
Mode	24
Bits 8-11 Version - This is the PDL version number; each time the contents of the PDL are changed this number is incremented by one, modulo 16.	55-56 PDL [illegible] at chg. cod.
Bit 14 1 = VAS Mode, 0 = VISSR mode	
Bit 15 1 = MSI, 0 = DS	
Processor Parameters of next 20 PDL's on schedule.	25-52
See Section 2 same word numbers; data will be zero in VISSR mode	
TOTAL Number of ~~Average~~ Spins Per ~~Step~~ Frame (changed at end of PDL transmission to S/C)	53-54
Spare	55 54-56 57-76
Next O&A Data	77-100
This data is in identical format to O&A data currently in-use (words 101-124 Section 1); however, this data is for the time period following the current O&A time period.	Cmd ~~entry code of last~~ change code PDL execution (ASCII) Note: code = for ~ GO, ..., GF in manual
Future O&A	101-124
This data is in identical format to O&A data currently in-use (words 101-124 Section 1); however, this data is for the time period following the Next O&A Data time period.	Auto Cmd Status 57 LSB = 1 → Auto Schedule LSB = 0 → Manual
O&A Load in Progress	125
Bit 15 = 1 Next O&A is being loaded	ZZ at startup
Bit 14 = 1 Future O&A is being loaded	A0 } alternates in auto cmd A1 }
Spare	126-127
Parity	128

chances when PDL sent

M0 } alternates in manual cmd

VISIBLE DOCUMENTATION

The contents of the 512 visible documentation words are shown in Table 2.

TABLE 2. Mode AA Visible Documentation

Words 1, 2, 3	Sector code*	-	1-8 uses three words; each word represents a 0 or 1 state. (Example: Sector 5 is identified as 1111100001111110.) The most significant word is first. The sectors (following IR) have numbers 000, 001, ..., 111.

The contents of sectors 0 to 7 are:

Sectors	Contents	Scan Count
0	V5	N
1	V6	N
2	V7	N
3	V8	N
4	V1	N+1
5	V2	N+1
6	V3	N+1
7	V4	N+1

The IR1 and IR2 data output prior to sector 0 has scan count N.

Word 4	Frame code*	-	ONE indicates picture transmission.
Word 5	Change code*	-	ONE indicates start of picture if frame code is ONE or end of picture if frame code is ZERO.
Word 6	Step code*	-	ONE indicates normal line transmission; ZERO indicates that this is not to be used to expose film and facsimile recorder line is not to be incremented (stepped).

TABLE 2. Mode AA Visible Documentation

Word 7	Line Offset	- This is a three bit word from the line offset logic inserted into the last three bit positions with 0's inserted into the first three positions, i.e., (000xxx).
Word 8 — 512	NOT USED	

* All but the last bit in each code word are identical, e.g., 000001 (ZERO) or 111110 (ONE).