Kidwell

NOAA-K P & C HANDBOOK

CHAPTER 18

POES Instrument Team

Instrument Systems Manager: Gil Colon 286-2113

Instrument	GSFC Instrument Point of Contact	Phone #
AVHRR/3	Doug Fineberg	286-~~9842~~ 1699
HIRS/3	Jack Knoll	286-8192
AMSU-A1 and A2	Sergey Krimchansky	286-9843
AMSU-B	Harold Goldberg	286-~~1090~~ 1699
SEM	Norm Piterski	286-7419
DCS/2, SARSAT	George Robinson	286-8934
SBUV	Tony Miller	286-4444

UNITED STATES DEPARTMENT OF COMMERCE
Office of the Deputy Under Secretary for Oceans and Atmosphere
Washington, D.C. 20230

May 6, 1996 SAO61:TW

MEMORANDUM FOR: Distribution

Thomas M. Wrublewski

FROM: Thomas M. Wrublewski
Polar Satellite Engineering

SUBJECT: Correction to HRPT Minor Frame Documentation of AVHRR/3 Channel 3A/3B Indicator

The previously released ground system interface specification is in error with the contents of the HRPT first ID word coding for the AVHRR/3 channel 3A/3B indicator. NASA originally directed the coding to be such that users would see no change when channel 3B (3.7 microns) was used as it is today leaving word 7 bit 10 as a "1". The ground system interface document was correspondingly also written, but the actual implementation was reversed and is correctly described in the attached excerpt from the NOAA-KLM Programming & Control Handbook. That is word 7 of the HRPT minor frame first ID word will have bit 10 equal to "1" when channel 3A (1.6 microns) is operational and bit 10 will be a "0" when channel 3B is selected. The ground system interface document (Satellite to Ground Interface IS3278200) page 18, incorrect copy attached, will be corrected in a future revision.

Printed on Recycled Paper

Attachments

Distribution: E/OSD - G. Mandt / J. O'Neal / C. Haskins / P. Taylor
E/OSD1 - D. McGinnis / S. Bajpai / J. Silva
E/OSD3 - R. Brower / H. Wood / H. McClure
E/SO - G. Davis
E/SO1 - L. Barbieri
E/SO11 - S. Schaffer
E/SO12 - D. Han
E/SO13 - J. Hutchins / D. Miller
E/SP12 - H. Phillips / W. Clouse / R. Levin / S. Brown / E. Harrod
E/SP13 - B. Banks / J. Sapper / E. Brown / C. Paris
E/SP22 - W. Winston
E/RA13 - C. Walton / W. Pichel
E/RA14 - C.R.N. Rao
E/CC62 - K. Kidwell
LMSG - B. Cumbie / M. Ahdoot / S. Miller

cc: SAO6 - W. Mazur
SAO61 - P. Kim / P. Green
CSC - J. Laskowski / W. Asplund
NASA/GSFC - D. Coolidge / J. Ferry / K. Halterman / D. Fineberg / G. Colon

The first ID word (word 7 of the HRPT minor frame) is coded in accordance with Table 5-20.

TABLE 5-20. CODING OF HRPT ID WORD 7

Bit	Data	Coding Definition
1	0 1	Internal Sync AVHRR Sync
2, 3	00 01 10 11	GAC Frame HRPT/LAC Frame #1 HRPT/LAC Frame #2 HRPT/LAC Frame #3
4-7	X	MIRP Spacecraft Identification
8	0 1	Frame Stable Frame Resync Occurred
9	1 0	Input Data from AVHRR Input Data from PN Code
10	X	AVHRR Channel 3A/3B Selection Data "1" = 3A Selected; Data "0" = 3B Selected

The second ID word (word 8 in the frame) is undefined.

TABLE 3.1.5-2.
HRPT MINOR FRAME FORMAT

Function	No. of Words	Word Position	Bit No. 1 2 3 4 5 6 7 8 9 10 Plus Word Code & Meaning
Frame Sync	6	1	1 0 1 0 0 0 0 1 0 0
		2	0 1 0 1 1 0 1 1 1 1
		3	1 1 0 1 0 1 1 1 0 0 See Note 1
		4	0 1 1 0 0 1 1 1 0 1
		5	1 0 0 0 0 0 1 1 1 1
		6	0 0 1 0 0 1 0 1 0 1
ID	2	7	Bit 1; 0 = Internal Sync; 1 = AVHRR Sync Bits 2 & 3; 00 = Not an HRPT frame but a GAC Frame; 01 = Minor Frame #1; 10 = Minor Frame #2, 11 = Minor Frame #3 Bits 4-7; Spacecraft Addresses; Bit 4 = MSB, Bit 7 = LSB Bit 8; 0 = Frame Stable; 1 = Frame Resync Occurred Bit 9; 1 = Normal AVHRR input; 0 = PN AVHRR input Error → Bit 10; 0 = AVHRR CH3A, 1 = AVHRR CH3B Reversed
		8	Bits 1-10; Spare - undefined
Time Code	4	9	Bits 1-9; Binary day count; Bit 1 = MSB; Bit 9 = LSB Bit 10; 0; spare
		10	Bit 1-3; 101, spare Bits 4-10; Part of Binary msec of day count; Bit 4 = MSB
		11	Bit 1-10; Part of Binary msec of day count;
		12	Bit 1-10; Remainder of Binary msec of day count; Bit 10 = LSB
Telemetry	10	13	Ramp Calibration AVHRR Channel #1
		14	Ramp Calibration AVHRR Channel #2
		15	Ramp Calibration AVHRR Channel #3
		16	Ramp Calibration AVHRR Channel #4
		17	Ramp Calibration AVHRR Channel #5
		18	AVHRR Chan #3 Target Temp.
		19	AVHRR Chan #4 Target Temp.
		20	AVHRR Chan #5 Target Temp. See Note 2
		21	Channel 3 patch Temp.
		22	Spare - Undefined
Back Scan	30	23 thru 52	10 words of back scan data from each AVHRR channel 3, 4, and 5. These data are time multiplexed as chan 3 (word 1), chan 4 (word 1), chan 5 (word 1), chan 3 (word 2), chan 4 (word 2), chan 5 (word 2), etc.
Space Data	50	53 thru 102	10 words of space scan data from each AVHRR channel 1, 2, 3, 4, and 5. These data are time multiplexed as chan 1 (word 1), chan 2 (word 1), chan 3 (word 1), chan 4 (word 1), chan 5 (word 1), chan 1 (word 2), chan 2 (word 2), chan 3 (word 2), chan 4 (word 2), chan 5 (word 2), etc.
Sync Delta	1	103	Bit 1; 0 = AVHRR sync early; 1 = AVHRR sync late, Bits 2-10; 9 bit binary count of 0.9984 MHz periods; Bit 2 = MSB, Bit 10 - LSB

TABLE OF CONTENTS

SECTION		PAGE
18.1	ADVANCED VERY HIGH RESOLUTION RADIOMETER/3 (AVHRR/3)	18.1-1
18.1.1	FUNCTIONAL DESCRIPTION	18.1-1
18.1.1.1	Introduction	18.1-1
18.1.1.2	Data Products	18.1-1
18.1.2	SYSTEM DESCRIPTION	18.1-1
18.1.2.1	General	18.1-1
18.1.2.2	Scanner Module	18.1-5
18.1.2.3	Electronics Module	18.1-6
18.1.2.4	Radiant Cooler Module	18.1-6
18.1.2.5	Optical Subsystem	18.1-6
18.1.2.6	Baseplate unit	18.1-7
18.1.3	ELECTRICAL AND MECHANICAL BLOCK DIAGRAMS	18.1-7
18.1.4	INTERFACE TIMING	18.1-7
18.1.4.1	Clocks	18.1-7
18.1.4.2	Data Sample Pulse	18.1-7
18.1.5	INSTRUMENT TELEMETRY	18.1-11
18.1.5.1	AVHRR/3 Outputs to the MIRP	18.1-11
18.1.5.1.1	Line Synchronization Pulse	18.1-11
18.1.5.1.2	Radiometric Data Lines	18.1-11
18.1.5.1.3	Calibration Data	18.1-14
18.1.5.2	Analog Telemetry	18.1-16
18.1.5.3	Digital "B" Telemetry	18.1-18
18.1.5.4	Digital "A" Telemetry	18.1-18
18.1.5.5	Exceptions	18.1-22
18.1.6	COMMANDS	18.1-22
18.1.6.1	Safe State Definition	18.1-22
18.1.6.2	Power Down Mnemonic Sequence	18.1-23
18.1.6.3	Power Up Mnemonic Sequence	18.1-23
18.1.6.3.1	Routine Power Up	18.1-23
18.1.6.3.2	Power Up from Safe Sate	18.1-23
18.1.7	MIRP PROCESSING	18.1-24
18.1.7.1	Automatic Picture Transmission (APT)	18.1-24
18.1.7.2	Global Area Coverage (GAC)	18.1-24
18.1.7.3	High Resolution Picture Transmission (HRPT)	18.1-24
18.1.7.4	Local Area Cover (LAC)	18.1-24
18.1.8	POWER INPUT AND PROFILE	18.1-25
18.1.9	ACTIVATION AND EVALUATION (A&E) PROCEDURES AND TIMELINE	18.1-25
18.1.10	OPERATIONAL MODES	18.1-25
18.1.10.1	Launch Mode	18.1-25
18.1.10.2	Post-Launch Check-out Phase	18.1-26
18.1.10.3	Orbit Mode	18.1-27
18.1.11	CALIBRATION REQUIREMENTS	18.1-28
18.1.12	ROUTINE COMMAND REQUIREMENTS	18.1-28
18.1.13	EVALUATION OF NOMINAL PERFORMANCE AND TREND REQUIREMENTS	18.1-28
18.1.14	CONSTRAINTS	18.1-28
18.1.14.1	Pre-launch Mode	18.1-28

TABLE OF CONTENTS-Cont.

SECTION		PAGE
18.1.14.2	Launch Mode	18.1-28
18.1.14.3	Orbit Mode Constraints	18.1-29
18.2	HIGH RESOLUTION INFRARED RADIATION SOUNDER (HIRS/3)	18.2-1
18.2.1	FUNCTIONAL DESCRIPTION	18.2-1
18.2.2	SYSTEM DESCRIPTION	18.2-2
18.2.2.1	Introduction	18.2-2
18.2.2.2	Scan System Description	18.2-6
18.2.3	ELECTRICAL AND MECHANICAL BLOCK DIAGRAMS	18.2-8
18.2.4	INTERFACE TIMING	18.2-10
18.2.5	INSTRUMENT TELEMETRY	18.2.10
18.2.5.1	Analog Telemetry	18.2-10
18.2.5.1.1	Analog Housekeeping Telemetry	18.2-11
18.2.5.1.2	Full Time Analog Telemetry	18.2-11
18.2.5.2	Digital "B" Telemetry	18.2-11
18.2.5.3	Digital "A" Telemetry	18.2-12
18.2.6	COMMANDS	18.2-18
18.2.6.1	Command Mnemonics and Descriptions	18.2-18
18.2.6.2	Safe State Definition	18.2-20
18.2.6.3	Power Down Mnemonic Sequence	18.2-21
18.2.6.3.1	Normal Power Down	18.2-21
18.2.6.3.2	Emergency Power Down	18.2-21
18.2.6.4	Power Up Mnemonic Sequence	18.2-21
18.2.6.4.1	Routine Power Up	18.2-21
18.2.6.4.2	Power Up from Safe State	18.2-22
18.2.7	MIRP PROCESSING	18.2-22
18.2.8	POWER INPUT AND PROFILE	18.2-22
18.2.9	ACTIVATION AND EVALUATION (A&E) PROCEDURES AND TIMELINE	18.2-23
18.2.10	OPERATIONAL MODES	18.2-25
18.2.10.1	Launch Mode	18.2-25
18.2.10.2	Orbit Mode	18.2-25
18.2.10.2.1	General	18.2-25
18.2.10.2.2	Detailed Orbit Mode Description	18.2-25
18.2.10.3	Command Position Mode	18.2-28
18.2.10.4	Continuous Step Mode	18.2-28
18.2.11	CALIBRATION REQUIREMENTS	18.2-29
18.2.12	ROUTINE COMMAND REQUIREMENTS	18.2-29
18.2.13	EVALUATION OF NOMINAL PERFORMANCE AND TREND REQUIREMENTS	18.2-29
18.2.14	CONSTRAINTS	18.2-29
18.2.14.1	Pre-launch Mode	18.2-29
18.2.14.2	Launch Mode	18.2-29
18.2.14.3	Activation Constraints	18.2-30
18.2.14.4	Orbit Mode Constraints	18.2-30

TABLE OF CONTENTS-Cont.

SECTION		PAGE
18.3	ADVANCED MICROWAVE SOUNDING UNIT-A1 (AMSU-A1)	18.3-1
18.3.1	FUNCTIONAL DESCRIPTION	18.3-1
18.3.2	SYSTEM DESCRIPTION	18.3-1
18.3.2.1	General	18.3-1
18.3.2.2	Antenna/Drive/Calibration System	18.3-2
18.3.2.3	Receiver Subsystem	18.3-3
18.3.2.3.4	Signal Processor Subsystem	18.3-3
18.3.2.3.5	Structural/Thermal Subsystem	18.3-3
18.3.3	ELECTRICAL AND MECHANICAL BLOCK DIAGRAMS	18.3-3
18.3.4	INTERFACE TIMING	18.3-6
18.3.5	INSTRUMENT TELEMETRY	18.3-7
18.3.5.1	Analog Telemetry	18.3-7
18.3.5.2	Digital "B" Telemetry	18.3-7
18.3.5.3	Digital "A" Telemetry	18.3-7
18.3.6	COMMANDS	18.3-16
18.3.6.1	Safe State	18.3-17
18.3.6.2	Power Down Mnemonic Sequence	18.3-17
18.3.6.3	Power Up Mnemonic Sequence	18.3-18
18.3.7	MIRP PROCESSING	18.3-19
18.3.8	POWER INPUT AND PROFILE	18.3-19
18.3.9	ACTIVATION AND EVALUATION (A&E) PROCEDURE AND TIMELINE	18.3-19
18.3.10	OPERATIONAL MODES	18.3-19
18.3.11	CALIBRATION REQUIREMENTS	18.3-20
18.3.12	ROUTINE COMMAND REQUIREMENTS	18.3-20
18.3.12.1	Redundant Phase Lock Loop Operation	18.3-20
18.3.12.2	Selection of Cold Calibration Position	18.3-21
18.3.12.3	Warm Calibration Mode	18.3-21
18.3.12.4	Cold Calibration Mode	18.3-21
18.3.12.5	Nadir Position Mode	18.3-21
18.3.13	EVALUATION OF NOMINAL PERFORMANCE AND TREND REQUIRMENTS	18.3-22
18.3.14	CONSTRAINTS	18.3-22
18.3.14.1	Pre-Launch and Launch Constraints	18.3-22
18.3.14.2	Initial Turn-On Constraints	18.3-22
18.3.14.3	Operational Constraints	18.3-22
18.4	ADVANCED MICROWAVE SOUNDING UNIT-A2 (AMSU-A2)	18.4-1
18.4.1	FUNCTIONAL DESCRIPTION	18.4-1
18.4.2	SYSTEM DESCRIPTION	18.4-1
18.4.2.1	General	18.4-1
18.4.2.2	Antenna/Drive/Calibration Subsystem	18.4-1
18.4.2.3	Receiver Subsystem	18.4-2
18.4.2.4	Signal Processor Subsystem	18.4-2
18.4.2.5	Structural/Thermal Subsystem	18.4-2

TABLE OF CONTENTS-Cont.

SECTION		PAGE
18.4.3	ELECTRICAL AND MECHANICAL BLOCK DIAGRAMS	18.4-2
18.4.4	INTERFACE TIMING	18.4-4
18.4.5	INSTRUMENT TELEMETRY	18.4-6
18.4.5.1	Analog Telemetry	18.4-6
18.4.5.2	Digital "B" Telemetry	18.4-6
18.4.5.3	Digital "A" Telemetry	18.4-7
18.4.6	COMMANDS	18.4-12
18.4.6.1	Safe State	18.4-13
18.4.6.2	Power Down Mnemonic Sequence	18.4-14
18.4.6.3	Power Up Mnemonic Sequence	18.4-14
18.4.7	MIRP PROCESSING	18.4-15
18.4.8	POWER INPUT AND PROFILE	18.4-15
18.4.9	ACTIVATION AND EVALUATION (A&E) PROCEDURE AND TIMELINE	18.4-15
18.4.10	OPERATIONAL MODES	18.4-16
18.4.11	CALIBRATION REQUIREMENTS	18.4-16
18.4.12	ROUTINE COMMAND REQUIREMENTS	18.4-16
18.4.12.1	Selection of Cold Calibration Position	18.4-16
18.4.12.2	Warm Calibration Mode	18.4-17
18.4.12.3	Cold Calibration Mode	18.4-17
18.4.12.4	Nadir Position Mode	18.4-18
18.4.13	EVALUATION OF NOMINAL PERFORMANCE AND TREND REQUIREMENTS	18.4-18
18.4.14	CONSTRAINTS	18.4-18
18.4.14.1	Pre-Launch and Launch Constraints	18.4-18
18.4.14.2	Initial Turn-On Constraints	18.4-18
18.4.14.3	Operational Constraints	18.4-18
18.5	ADVANCED MICROWAVE SOUNDING UNIT - B (AMSU-B)	18.5-1
18.5.1	FUNCTIONAL DESCRIPTION	18.5-1
18.5.2	SYSTEM DESCRIPTION	18.5-6
18.5.2.1	General	18.5-6
18.5.2.2	Main Reflector and Shroud	18.5-10
18.5.2.3	Subreflector	18.5-10
18.5.2.4	Quasi Optic Feed	18.5-10
18.5.2.5	Microwave Receiver	18.5-12
18.5.2.6	Calibration Target	18.5-13
18.5.2.7	Scanning Mechanism	18.5-14
18.5.2.8	Processing Electronics Unit	18.5-15
18.5.2.9	Motor Drive Electronics Unit and Inductosyn Control Electronics	18.5-16
18.5.2.10	Power Supply Unit	18.5-17
18.5.2.11	Structure	18.5-17
18.5.2.12	Thermal Control	18.5-17
18.5.2.13	Systems Requirements	18.5-19
18.5.3	ELECTRICAL AND MECHANICAL BLOCK DIAGRAMS	18.5-19

TABLE OF CONTENTS-Cont.

SECTION		PAGE
18.5.4	INTERFACE TIMING	18.5-19
18.5.4.1	Clocks	18.5-20
18.5.4.2	Synchronization Signals	18.5-20
18.5.4.3	AIP Switchover	18.5-23
18.5.5	INSTRUMENT TELEMETRY	18.5-23
18.5.5.1	Introduction	18.5-23
18.5.5.2	Analog Telemetry	18.5-23
18.5.5.3	Digital "B" Telemetry	18.5-24
18.5.5.4	Digital "A" Telemetry	18.5-25
18.5.6	COMMANDS	18.5-32
18.5.6.1	General	18.5-32
18.5.6.2	Command Sequences	18.5-34
18.5.6.2.1	Initial Turn-On Sequence (In-Orbit)	18.5-34
18.5.6.2.2	Normal Turn-On Sequence (Test)	18.5-34
18.5.6.2.3	Turn-Off Sequence (Normal)	18.5-34
18.5.6.2.4	Safe State Sequence	18.5-35
18.5.7	MIRP PROCESSING	18.5-35
18.5.8	POWER INPUT AND PROFILE	18.5-35
18.5.8.1	Power Sources	18.5-35
18.5.8.2	Power Requirements	18.5-35
18.5.9	ACTIVATION AND EVALUATION PROCEDURES AND TIMELINE	18.5-36
18.5.10	OPERATIONAL MODES	18.5-36
18.5.10.1	Scan Normal	18.5-36
18.5.10.2	Scan Park	18.5-36
18.5.10.3	Scan Step	18.5-37
18.5.10.4	Investigation Mode	18.5-37
18.5.11	CALIBRATION REQUIREMENTS	18.5-37
18.5.12	ROUTINE COMMAND REQUIREMENTS	18.5-37
18.5.13	EVALUATION OF NOMINAL PERFORMANCE AND TREND REQUIREMENTS	18.5-37
18.5.13.1	Pre-activation and Post-activation Monitoring	18.5-37
18.5.13.2	Functional Evaluation	18.5-37
18.5.13.3	Trending	18.5-38
18.5.14	CONSTRAINTS	18.5-40
18.5.14.1	Pre-Launch	18.5-40
18.5.14.1.1	Pressure	18.5-40
18.5.14.1.2	EMI	18.5-40
18.5.14.1.3	Handling	18.5-40
18.5.14.1.4	Temperature	18.5-40
18.5.14.1.5	Cleanliness	18.5-41
18.5.14.1.6	Other	18.5-41
18.5.14.2	Launch	18.5-41
18.5.14.3	Turn-On	18.5-41
18.5.14.3.1	Pressure	18.5-41
18.5.14.3.2	Magnetic Fields	18.5-41
18.5.14.3.3	Temperature	18.5-41
18.5.14.3.4	Other	18.5-41

TABLE OF CONTENTS-Cont.

SECTION		PAGE
18.6	SPACE ENVIRONMENT MONITOR (SEM-2)	18.6-1
18.6.1	FUNCTIONAL DESCRIPTION	18.6-1
18.6.1.1	Total Energy Detector	18.6-1
18.6.1.2	Medium Energy Proton Electron Detector	18.6-2
18.6.1.3	Data Processing Unit	18.6-2
18.6.2	SYSTEM DESCRIPTION	18.6-2
18.6.2.1	Total Energy Detector	18.6-2
18.6.2.2	Medium Energy Proton Electron Detector (MEPED)	18.6-6
18.6.2.3	Data Processing Unit	18.6-11
18.6.3	ELECTRICAL AND MECHANICAL BLOCK DIAGRAMS	18.6-13
18.6.4	INTERFACE TIMING	18.6-13
18.6.5	INSTRUMENT TELEMETRY	18.6-13
18.6.5.1	Analog Telemetry	18.6-13
18.6.5.2	Digital "B" Telemetry	18.6-16
18.6.5.3	Digital "A" Telemetry	18.6-17
18.6.6	COMMANDS	18.6-24
18.6.6.1	Command Format	18.6-24
18.6.6.2	Safe State Definition	18.6-27
18.6.6.3	Power Down Sequence	18.6-27
18.6.6.3.1	Normal Turn-Off Command Sequence	18.6-27
18.6.6.3.2	Emergency Turn-Off Command Sequence	18.6-27
18.6.6.4	Recommended Turn-On Command Sequence	18.6-28
18.6.7	MIRP PROCESSING	18.6-28
18.6.8	POWER INPUT AND PROFILE	18.6-29
18.6.9	ACTIVATION AND EVALUATION (A&E) PROCEDURES AND TIMELINE	18.6-29
18.6.10	OPERATIONAL MODES	18.6-29
18.6.11	CALIBRATION REQUIREMENTS	18.6-29
18.6.11.1	Introduction	18.6-29
18.6.11.2	Timing	18.6-29
18.6.11.3	Format	18.6-29
18.6.12	ROUTINE COMMAND REQUIREMENTS	18.6-32
18.6.13	EVALUATION OF NOMINAL PERFORMANCE AND TREND REQUIREMENTS	18.6-33
18.6.14	CONSTRAINTS	18.6-34
18.6.14.1	Storage Requirements	18.6-34
18.6.14.2	Operating Environment	18.6-34
18.6.14.2.1	Pressure	18.6-34
18.6.14.2.2	Temperature	18.6-34
18.7	DATA COLLECTION SYSTEM/2 (DCS/2)	18.7-1
18.7.1	FUNCTIONAL DESCRIPTION	18.7-1
18.7.2	SYSTEM DESCRIPTION	18.7-1
18.7.2.1	Receiver Power Unit	18.7-1
18.7.2.2	Control Unit	18.7-1
18.7.2.3	Data Recovery Unit	18.7-1
18.7.2.4	Telemetry Encoder and Memory	18.7-3

TABLE OF CONTENTS-Cont.

SECTION		PAGE
18.7.2.5	Power and Command Unit	18.7-3
18.7.3	ELECTRICAL AND MECHANICAL BLOCK DIAGRAMS	18.7-3
18.7.4	INTERFACE TIMING	18.7-4
18.7.4.1	Clocks	18.7-4
18.7.4.2	Synchronization Signals	18.7.4
18.7.5	INSTRUMENT TELEMETRY	18.7-5
18.7.5.1	Analog Telemetry	18.7-5
18.7.5.2	Digital "B" Telemetry	18.7-5
18.7.5.3	Digital "A" Telemetry	18.7-6
18.7.6	COMMANDS	18.7-6
18.7.6.1	Command Descriptions	18.7-7
18.7.6.2	Safe State Definition	18.7-8
18.7.6.3	Power Down Mnemonic Sequence	18.7-8
18.7.6.3.1	Normal Power Down	18.7-8
18.7.6.3.2	Emergency Power Down	18.7-9
18.7.6.4	Power Up Mnemonic Sequence	18.7-11
18.7.6.4.1	Routine Power Up	18.7-11
18.7.6.4.2	Power Up from Safe State	18.7-11
18.7.6.4.3	Emergency Turn-On	18.7-12
18.7.7	MIRP PROCESSING	18.7-12
18.7.8	POWER INPUT AND PROFILE	18.7-12
18.7.8.1	Power Sources	18.7-12
18.7.8.2	Power Dissipation	18.7-12
18.7.9	ACTIVATION AND EVALUATION (A&E) PROCEDURES AND TIMELINE	18.7-13
18.7.10	OPERATIONAL MODES	18.7-13
18.7.10.1	Pre-launch and Launch	18.7-13
18.7.10.2	Spacecraft Activation Mode	18.7-13
18.7.10.3	Mission Mode	18.7-13
18.7.10.4	DCS/2 OFF Mode	18.7-14
18.7.11	CALIBRATION REQUIREMENTS	18.7-14
18.7.12	ROUTINE COMMAND REQUIREMENTS	18.7-14
18.7.13	EVALUATION OF NOMINAL PERFORMANCE AND TREND REQUIREMENTS	18.7-14
18.7.14	CONSTRAINTS	18.7-14
18.7.14.1	Pre-launch and Launch Mode	18.7-14
18.7.14.2	Activation Mode	18.7-14
18.7.14.3	Mission Mode	18.7-15
18.8	SEARCH AND RESCUE SATELLITE (SARSAT) INSTRUMENT PACKAGE	18.8-1
18.8.1	FUNCTIONAL DESCRIPTION	18.8-1
18.8.2	SYSTEM DESCRIPTION	18.8-4
18.8.2.1	SARSAT Antennas	18.8-4
18.8.2.1.1	SARSAT Receiver Antennas	18.8-4
18.8.2.1.2	L-Band Transmitter Antenna	18.8-4
18.8.2.2	SAR Repeater (SARR)	18.8-6

TABLE OF CONTENTS-Cont.

SECTION		PAGE
18.8.2.3	SAR Processor (SARP-2)	18.8-8
18.8.3	ELECTRICAL AND MECHANICAL BLOCK DIAGRAMS	18.8-8
18.8.4	INTERFACE TIMING	18.8-8
18.8.5	TELEMETRY	18.8-10
18.8.5.1	SARR Telemetry	18.8-10
18.8.5.1.1	Analog Telemetry	18.8-10
18.8.5.1.2	Digital "B" Telemetry	18.8-13
18.8.5.1.3	Digital "A" Telemetry	18.8-13
18.8.5.2	SARP-2 Telemetry	18.8-14
18.8.5.2.1	Analog Telemetry	18.8-14
18.8.5.2.2	Digital "B" Telemetry	18.8-14
18.8.5.2.3	Digital "A" (Platform) Data	18.8-15
18.8.5.2.3.1	SARP-2 Data	18.8-16
18.8.5.2.3.2	Calibration Data	18.8-19
18.8.6	COMMANDS	18.8-19
18.8.6.1	SARR Commands	18.8-19
18.8.6.1.1	Safe State Definition	18.8-25
18.8.6.1.2	Power Down Mnemonic Sequence	18.8-26
18.8.6.1.2.1	Normal Power Down	18.8-26
18.8.6.1.2.2	Emergency Power Down	18.8-26
18.8.6.1.3	Power Up Mnemonic Sequence	18.8-26
18.8.6.1.3.1	Routine Power Up	18.8-26
18.8.6.1.3.2	Power Up from Safe State	18.8-26
18.8.6.1.4	Other Command Sequences	18.8-27
18.8.6.2	SARP-2 Input Messages & Commands	18.8-29
18.8.6.2.1	Input Messages	18.8-29
18.8.6.2.2	Command Description	18.8-29
18.8.6.2.3	Safe-State Definition	18.8-30
18.8.6.2.4	Power Down Mnemonic Sequence	18.8-30
18.8.6.2.4.1	Normal Power Down	18.8-30
18.8.6.2.4.2	Emergency Power Down	18.8-30
18.8.6.2.4.3	Power Down from Safe State	18.8-31
18.8.6.2.5	Power Up Mnemonic Sequence	18.8-33
18.8.6.2.5.1	Routine Power Up	18.8-33
18.8.6.2.5.2	Power Up from Safe State (Mnemonic)	18.8-33
18.8.6.2.5.3	Emergency Power Up	18.8-33
18.8.7	MIRP PROCESSING	18.8-34
18.8.8	POWER INPUT AND PROFILE	18.8-34
18.8.8.1	SARR Power	18.8-34
18.8.8.1.1	Power Sources	18.8-34
18.8.8.1.2	+28 Volt Main Bus Power Consumption	18.8-34
18.8.8.2	SARP-2 Power	18.8-35
18.8.8.2.1	Power Sources	18.8-35
18.8.8.2.2	+28 Volt Main Bus Power Consumption	18.8-35
18.8.9	ACTIVATION AND EVALUATION (A&E) PROCEDURES AND TIMELINE	18.8-35
18.8.9.1	SARR Activation	18.8-35
18.8.9.2	SARP-2 Activation	18.8-35
18.8.10	OPERATIONAL MODES	18.8-35

TABLE OF CONTENTS-Cont.

SECTION		PAGE
18.8.11	CALIBRATION REQUIREMENTS	18.8-35
18.8.12	ROUTINE COMMAND REQUIREMENTS	18.8-35
18.8.13	EVALUATION OF NOMINAL PERFORMANCE AND TREND REQUIREMENTS	18.8-36
18.8.14	CONSTRAINTS	18.8-36
18.8.14.1	SARR Constraints	18.8-36
18.8.14.2	SARP-2 Constraints	18.8-36
18.9	SOLAR BACKSCATTER ULTRAVIOLET SPECTRAL RADIOMETER (SBUV/2)	18.9-1
18.9.1	FUNCTIONAL DESCRIPTION	18.9-1
18.9.1.1	Purpose of the SBUV Instrument	18.9-1
18.9.1.2	Instrument Description	18.9-1
18.9.2	SYSTEM DESCRIPTION	18.9-1
18.9.3	ELECTRICAL AND MECHANICAL BLOCK DIAGRAMS	18.9-2
18.9.4	INTERFACE TIMING	18.9-6
18.9.5	INSTRUMENT TELEMETRY	18.9-7
18.9.5.1	Analog Telemetry	18.9-7
18.9.5.2	Digital "B" Telemetry	18.9-8
18.9.5.3	Digital "A" Telemetry	18.9-8
18.9.5.3.1	Discrete Mode	18.9-8
18.9.5.3.2	Sweep Mode	18.9-8
18.9.5.3.3	Wavelength Calibration Mode	18.9-9
18.9.5.3.4	Position Mode	18.9-17
18.9.6	COMMANDS	18.9-17
18.9.6.1	Command Description	18.9-17
18.9.6.2	Safe State Definition	18.9-23
18.9.6.3	Power Down Sequence	18.9-24
18.9.6.4	Power Up Sequence	18.9-24
18.9.7	MIRP PROCESSING	18.9-25
18.9.8	POWER INPUT AND PROFILE	18.9-25
18.9.9	ACTIVATION AND EVALUATION (A&E) PROCEDURES AND TIMELINE	18.9-25
18.9.10	OPERATIONAL MODES	18.9-30
18.9.10.1	Discrete Mode (Mode 1)	18.9-30
18.9.10.2	Sweep Mode (Mode 2)	18.9-30
18.9.10.3	Wavelength Calibration Mode (Mode 3)	18.9-30
18.9.10.4	Position Mode (Mode 4)	18.9-30
18.9.11	CALIBRATION REQUIREMENTS	18.9-30
18.9.11.1	In-Flight Measurement of Detector Gain	18.9-30
18.9.11.2	In-Flight Wavelength Calibration	18.9-31
18.9.11.3	Pre-flight Calibration: Ratio of Radiance to Irradiance Accuracy	18.9-31
18.9.12	ROUTINE COMMAND REQUIREMENTS	18.9-31
18.9.13	EVALUATION OF NOMINAL PERFORMANCE AND TREND REQUIREMENTS	18.9-31
18.9.14	CONSTRAINTS	18.9-31

TABLE OF CONTENTS-Cont.

SECTION		PAGE
18.9.14.1	General	18.9-31
18.9.14.2	Pre-launch Phase	18.9-31
18.9.14.3	Launch Phase	18.9-32
18.9.14.4	Activation Phase	18.9-32
18.9.14.5	Operational Phase	18.9-32

LIST OF FIGURES

FIGURE		PAGE
18.1-1	Summary of AVHRR/3 Spectral Channel Characteristics	18.1-2
18.1-2	System Performance Characteristics	18.1-2
18.1-3	AVHRR/3 Exploded View	18.1-4
18.1-4	Signal Position as a Function of Scan Angle	18.1-5
18.1-5	AVHRR/3 Electronics Block Diagram	18.1-8
18.1-6	AVHRR/3 Instrument Outline	18.1-9
18.1-7	MIRP/AVHRR/3 Interface Timing	18.1-10
18.1-8	AVHRR/3 Analog Channel Content	18.1-13
18.1-9	MIRP Data Sample Intervals	18.1-14
18.1-10	Scan/Calibration Timing (Nominal Orbit)	18.1-15
18.1-11	AVHRR/3 Voltage Calibration Levels	18.1-15
18.1-12	AVHRR/3 Analog Telemetry	18.1-16
18.1-13	AVHRR Digital "B" Telemetry	18.1-19
18.1-14	AVHRR/3 Commands	18.1-19
18.1-15	AVHRR/3 Power Profile	18.1-26
18.1-16	AVHRR/3 On-Orbit Nominal Performance	18.1-29
18.2-1	HIRS/3 System Characteristics	18.2-2
18.2-2	HIRS/3 Spectral Requirements	18.2-3
18.2-3	Scan Angles	18.2-4
18.2-4	Sensor Temperature Ranges	18.2-5
18.2-5	Typical System Test Output	18.2-5
18.2-6	Scan System Basic Block Diagram	18.2-7
18.2-7	HIRS/3 System Block Diagram	18.2-8
18.2-8	HIRS/3 Exploded View	18.2-9
18.2-9	HIRS/3 Analog Telemetry	18.2-11
18.2-10	HIRS/3 Digital B Telemetry	18.2-12
18.2-11	HIRS/3 Scan Step Sequence with Calibration Cycle	18.2-13
18.2-12	Digital A Status Telemetry	18.2-15
18.2-13	Digital A Status Telemetry	18.2-18
18.2-14	HIRS/3 Commands	18.2-19
18.2-15	HIRS/3 Power Distribution	18.2-24
18.2-16	Scan System Detailed Block Diagram	18.2-27
18.3-1	AMSU-A Channel Descriptions	18.3-2
18.3-2	AMSU-A1 Mechanical Layout	18.3-4
18.3-3	AMSU-A1 Block Diagram	18.3-5
18.3-4	AMSU-A1 Data Interface Timing	18.3-6
18.3-5	AMSU-A1 Analog Telemetry	18.3-7
18.3-6	Digital "B" Telemetry for AMSU-A1	18.3-8
18.3-7	AMSU-A1 Digital "A" Data Format - Full Scan Mode	18.3-8
18.3-8	AMSU-A1 Digital "A" Data Format - Warm Cal Mode	18.3-11
18.3-9	AMSU-A1 Digital "A" Data Format - Cold Cal Mode	18.3-12
18.3-10	AMSU-A1 Digital "A" Data Format - Nadir Mode	18.3-13
18.3-11	AMSU-A1 Data Word Description	18.3-14
18.3-12	AMSU-A1 Operational Commands	18.3-16
18.3-13	AMSU-A Power Inputs Profile	18.3-19

LIST OF FIGURES-Cont.

FIGURE		PAGE
18.3-14	Instrument Status vs. Operation Modes	18.3-20
18.3-15	AMSU-A1 Nominal Temperature Ranges	18.3-23
18.4-1	AMSU-A Channel Descriptions	18.4-1
18.4-2	AMSU-A2 Block Diagram	18.4-3
18.4-3	AMSU-A2 Mechanical Layout	18.4-4
18.4-4	AMSU-A2 Data Interface Timing	18.4-5
18.4-5	AMSU-A2 Analog Telemetry	18.4-6
18.4-6	Digitial "B" Telemetry for AMSU-A2	18.4-6
18.4-7	AMSU-A2 Digital "A" Data Format - Full Scan Mode	18.4-7
18.4-8	AMSU-A2 Digital "A" Data Format - Warm Cal Mode	18.4-9
18.4-9	AMSU-A2 Digital "A" Data Format - Cold Cal Mode	18.4-10
18.4-10	AMSU-A2 Digital "A" Data Format - Nadir Mode	18.4-10
18.4-11	AMSU-A2 Data Word Description	18.4-11
18.4-12	AMSU-A2 Operational Commands	18.4-13
18.4-13	AMSU-A2 Power Inputs Profile	18.4-15
18.4-14	Instrument Status vs. Operation Modes	18.4-17
18.4-15	AMSU-A2 Nominal Temperature Ranges	18.4-19
18.5-1	Microwave Characteristics of the Atmosphere	18.5-1
18.5-2	AMSU-B Scanning	18.5-2
18.5-3	AMSU-B Center Frequencies and Bandwidths	18.5-3
18.5-4	Definition of AMSU-B Scan Plan and Motion	18.5-4
18.5-5	AMSU-B Scan Profile	18.5-5
18.5-6 (a)	AMSU-B Block Diagram	18.5-7
18.5-6 (b)	AMSU-B Electrical Interface with Spacecraft	18.5-8
18.5-7	AMSU-B General Configuration	18.5-9
18.5-8	Quasi-Optical System	18.5-10
18.5-9	System Functional Diagram of Quasi-Optic System	18.5-11
18.5-10	Center Frequency and Stability of the Microwave Receive	18.5-12
18.5-11	AMSU-B Receiver Block Diagram	18.5-12
18.5-12	Cross Section of AMSU-B Gunn Diode Local Oscillator	18.5-13
18.5-13	Scan Subsystem Block Diagram	18.5-14
18.5-14	Instrument Initialization Velocity Profile	18.5-15
18.5-15	PSU Block Diagram	18.5-18
18.5-16	Instrument Temperature Ranges	18.5-19
18.5-17	Systems Requirements Summary	18.5-19
18.5-18 (a)	AIP Digital Interface (16.64 KBS)	18.5-21
18.5-18 (b)	Spacecraft Clock to 8 Second Sync Skew	18.5-22
18.5-19	Spacecraft/AMSU-B Clock Interfaces	18.5-23
18.5-20	Spacecraft/AMSU-B Synchronization Signal Interfaces	18.5-23
18.5-21	AMSU-B Analog Telemetry	18.5-24
18.5-22	Digital "B" Telemetry	18.5-24
18.5-23	AMSU-B Data Format	18.5-26
18.5-24	AMSU-B Data Word Description	18.5-31
18.5-25	Spacecraft/AMSU-B Command Interfaces	18.5-33
18.5-26	AMSU-B Power	18.5-35

LIST OF FIGURES-Cont.

FIGURE		PAGE
18.5-27	Instrument Operating Modes	18.5-36
18.5-28	FM-1 Analog Telemetry Warning Limits	18.5-38
18.5-29	Digital A Telemetry Warning Limits	18.5-39
18.5-30	Shaft Positions and Warning Limits	18.5-39
18.6-1	TED Block Diagram	18.6-3
18.6-2	Electrostatic Analyzer Configuration (0°)	18.6-4
18.6-3	Electrostatic Analyzer Configuration (30°)	18.6-5
18.6-4	Continuous Dynode Electron Multipler (CDEM) Configuration	18.6-5
18.6-5	MEPED Block Diagram	18.6-6
18.6-6	Proton Telescope Configuration	18.6-7
18.6-7	Electron Telescope Configuration	18.6-8
18.6-8 (a)	OMNI Sensor D4 & D5 Configuration	18.6-9
18.6-8 (b)	OMNI Sensor D6 Configuration	18.6-10
18.6-8 (c)	OMNI Sensor D7 Configuration	18.6-10
18.6-9	Bias Supply Block Diagram	18.6-11
18.6-10	Data Processing Unit Block Diagram	18.6-12
18.6-11	Microprocessor and System Timing	18.6-14
18.6-12	SEM Analog Telemetry Outputs	18.6-15
18.6-13	SEM Digital B Telemetry	18.6-16
18.6-14	SEM Digital A Telemetry Data Assignments	18.6-18
18.6-15	MEPED Digital A Data	18.6-19
18.6-16	TED Digital A Data	18.6-19
18.6-17	Analog Digital A Assignments	18.6-20
18.6-18	Analog Digital A Subcommutator Data Assignments	18.6-21
18.6-19	Digital A Bi-Level Data Assignments	18.6-22
18.6-20	Digital A Bi-Level Subcommutator Assignments	18.6-23
18.6-21	Digital A Bi-Level Subcommutator Frame Bit Assignments	18.6-24
18.6-22	SEM Pulse Command Assignments	18.6-25
18.6-23	SEM Level Command Assignments	18.6-25
18.6-24	MEPED In-Flight Calibration Ramp Sequence	18.6-30
18.6-25	MSEM-2 MEPED IFC Scales	18.6-31
18.6-26	TED In-Flight Calibrator Ramp Sequence	18.6-32
18.6-27	SEM-2 Digital A MUX Signal Values and Limits	18.6-33
18.6-28	SEM-2 Spacecraft Analog Telemetry	18.6-34
18.6-29	SEM-2 Temperature Monitor Limits - Using Parametrics' Polynomial Expansion Coefficients	18.6-35
18.7-1	DCS/2 Block Diagram	18.7-2
18.7-2	Input Signal Characteristics	18.7-3
18.7-3	Receiver Functional Block Diagram	18.7-3
18.7-4	DCS/2 Message Data Format	18.7-4
18.7-5	Spacecraft Synchronization Signal Interfaces	18.7-5
18.7-6	DCS/2 Analog Telemetry	18.7-5
18.7-7	Digital "B" Telemetry	18.7-6
18.7-8	DCS/2 Pseudo Format	18.7-7
18.7-9	DCS/2 Operational Commands	18.7-10

LIST OF FIGURES-Cont.

FIGURE		PAGE
18.7-10	DCS/2 Safe State Definition	18.7-11
18.7-11	+28 Volt Main Bus Power Profile	18.7-13
18.8-1	SARSAT Instrument Package	18.8-2
18.8-2	SARR/SARP-2 Functional Block Diagram	18.8-3
18.8-3	Antenna System Block Diagram	18.8-5
18.8-4	SARSAT Receive Antennas Parameters	18.8-5
18.8-5	SARSAT L-Band Transmit Antenna Parameters	18.8-6
18.8-6	SARR Input Parameters	18.8-7
18.8-7	SARR Output Parameters	18.8-7
18.8-8	SARR Transmission Impairment Limits	18.8-7
18.8-9	SARP-2 Block Diagram	18.8-9
18.8-10	SARP-2 System Parameters	18.8-10
18.8-11	SARR Analog Telemetry	18.8-10
18.8-12	SARR Digital "B" Telemetry	18.8-13
18.8-13	SARP-2 Analog Telemetry	18.8-14
18.8-14	SARP-2 Digital "B" Telemetry	18.8-15
18.8-15	SARP-2 Message Format - Short Message	18.8-16
18.8-16	SARP-2 Message Format - Long Message	18.8-17
18.8-17	SARP-2 Message Format - Pseudo Message	18.8-17
18.8-18	SARP-2 Frame Format	18.8-18
18.8-19	SARR Command Interface	18.8-20
18.8-20	SARR ON/OFF Power Modes	18.8-24
18.8-21	SARR & SARP-2 Safe-State Definition	18.8-25
18.8-22	SARP-2 Input Message Formats	18.8-31
18.8-23	SARP-2 Operational Commands	18.8-32
18.8-24	SARP-2 Power Dissipation	18.8-35
18.9-1	Simplified Optical Path	18.9-3
18.9-2	SBUV/2 Instrument	18.9-4
18.9-3	Block Diagram of SBUV/2 Electrical System	18.9-5
18.9-4	Spacecraft/SBUV/2 Clock and Synchronization Signal Interfaces	18.9-6
18.9-5	SBUV/2 Analog Telemetry	18.9-7
18.9-6	Digital "B" Telemetry	18.9-8
18.9-7	SBUV/2 Data Format Discrete Modes	18.9-9
18.9-8	SBUV/2 Data Format Discrete Mode Detailed Description	18.9-10
18.9-9	SBUV/2 Data Format Discrete Mode Analog Sub-Multiplexer Data Assignment	18.9-15
18.9-10	SBUV/2 Data Format Discrete Mode Digital A Status Word Description	18.9-15
18.9-11	SBUV/2 Data Format Sweep Mode	18.9-17
18.9-12	Spacecraft/SBUV/2 Command Interfaces	18.9-18
18.9-13	SBUV/2 Power Requirements and Typical Values	18.9-26
18.9-14	Flexible Memory Commands for SBUV FM 3 Goniometric Calibration	18.9-27

LIST OF FIGURES-Cont.

FIGURE		PAGE
18.9-15	Flexible Memory Commands for SBUV FM 3 Grating Calibration	18.9-28
18.9-16	SBUV Activation Timeline	18.9-29
18.9-17	SBUV Operational Daily Schedule	18.9-33

18.0 INSTRUMENTS

18.1 ADVANCED VERY HIGH RESOLUTION RADIOMETER / 3 (AVHRR/3)

18.1 ADVANCED VERY HIGH RESOLUTION RADIOMETER / 3 (AVHRR/3)

18.1.1 FUNCTIONAL DESCRIPTION

18.1.1.1 Introduction

This section describes the six channel Advanced Very High Resolution Radiometer (AVHRR/3) developed by ITT-A/CD. The AVHRR/3 is used as the meteorological imaging system of the TIROS spacecraft.

The AVHRR/3 is an imaging system in which a small field of view (1.3 milliradians by 1.3 milliradians) is scanned across the earth from one horizon to the other by continuous 360° rotation of a flat scanning mirror. The orientation of the scan lines are perpendicular to the spacecraft orbit track and the speed of rotation of the scan mirror is selected so that adjacent scan lines are contiguous at the subsatellite (nadir) position. Complete strip maps of the earth from pole to pole are thus obtained as the spacecraft travels in orbit at an altitude of approximately 450 n. miles (833 km). All six spectral channels of the AVHRR/3 are registered so that they all measure energy from the same spot on the earth at the same time. All six channels are also calibrated so that the signal amplitude in each channel is a measure of the scene radiance. Although the AVHRR/3 has six channels, only five are active at any one time. The radiometers are designed to operate within specification for a period of three years in orbit.

18.1.1.2 Data Products

The AVHRR/3 data are used to produce the following four data products.

(a) Continuous spacecraft-recorded Global Area Coverage (GAC) data from the AVHRR are provided. The GAC data are at 4 km resolution. The global data are required at the central processing facility with minimum delay for use in numerical prediction models and are routinely recovered by the two existing Command and Data Acquisition (CDA) stations.

(b) Spacecraft storage of data from selected Local Area Coverage (LAC) (approximately 10 minutes) of each orbit at high resolution (1 km) for central processing are provided.

(c) Continuous direct readout of two channels of AVHRR/3 data of the Automatic Picture Transmission (APT), worldwide, at low resolution (4 km) are provided to ground stations. Reduction of panoramic distortion is accomplished by the Manipulated Information Rate Processor (MIRP). The continuous real-time transmission of sounder data to this class of stations is provided.

(d) Continuous direct readout of five channels of AVHRR/3 data of the High Resolution Picture Transmission (HRPT), worldwide, (1 km resolution) is provided to the ground stations.

18.1.2 SYSTEM DESCRIPTION

18.1.2.1 General

The AVHRR/3 is a six channel scanning radiometer providing three solar channels in the visible-near infrared region and three thermal infrared channels. The AVHRR/3 has two one-micrometer wide channels between 10.3 and 12.5 μm. The instrument utilizes an 8 inch diameter collecting telescope of the reflective Cassegrain type. Cross-track scanning is

accomplished by a continuously rotating mirror direct-driven by a motor. The three thermal infrared detectors are cooled to 105 Kelvin (K) by a two-stage passive radiant cooler. A line synchronization signal from the scanner is sent to the spacecraft MIRP which in turn sends data sample pulses back to the AVHRR. Although AVHRR/3 is a six channel radiometer, only five channels are active at any given time. Channels 3A and 3B cannot operate simultaneously. The data from the six channels is simultaneously sampled at a 40 kHz rate and converted to 10-bit binary form within the instrument. The data samples from each channel are output in a non-continuous burst of 10 space samples, 2048 Earth samples, and 10 internal calibration target samples per scan.

A summary of the AVHRR/3 characteristics are given in Figures 18.1-1 and 18.1-2.

Parameter	Ch. 1	Ch. 2	Ch. 3A	Ch. 3B	Ch. 4	Ch. 5
Spectral Range (μM)	0.58-.68	.725-1.0	1.58-1.64	3.55-3.93	10.3-11.3	11.5-12.5
Detector Type	Silicon	Silicon	InGaAs	InSb	HgCdTe	HgCdTe
Resolution (Km)	1.09	1.09	1.09	1.09	1.09	1.09
IFOV**(milliradian)	1.3 sq.	1.3 sq.	1.3 sq.	1.3 sq.	1.3 sq.	1.3 sq.
S/N @ 0.5% Albedo	≥9:1	≥9:1	≥20:1	–	–	–
NETD @ 300K	–	–	–	≤.12K	≤.12K	≤.12K
MTF @ 1.09 Km	>.30	>.30	>.30	>.30	>.30	>.30
Temp K				355	355	355

** Tolerance on IFOV values are +/-0.2 mr with +/-0.1 mr a design goal.

Figure 18.1-1. Summary of AVHRR/3 Spectral Channel Characteristics.

Parameter/Characteristic	Value
Telescope	8 inch dia. afocal Cassegrain
Scan Motor	360 RPM hysterisis - synchronous
Scan Mirror	8.25" x 11.6" elliptical ribbed beryllium
Cooler	Two stage radiant cooler controlled @ 105K
Data Output	10 bit parallel words
Video Sample Rate	40 kHz simultaneous sample of all channels
Output Data Rate	200K words/sec max
Calibration Accuracy	
- relative	≤1 NEdT
- absolute	Traceable to NIST
- ICT monitor accuracy	0.1°C
Line Sync Pulse Out	100 μsec @ 6 pps
Input Clock	0.9984 MHz
Overall Dimensions	31.33" x 14.35" x 11.5"
Weight	≤73. lbs
Main Supply Bus Voltage	Nom 28 ± 0.56V (16-38V range)
Interface Bus Voltage	Nom 10 ± 0.5V (9-15V range)
Power	
Orbital Avg.	27W
Radiated EMI	
SAR Bands	-150 dBm

Figure 18.1-2. System Performance Characteristics.

Parameter/Characteristic	Value
Inst. Temperature Range	
Operating	+10° to +30°C
Storage	+5° to +30°C
Survivable	-5° to +30°C
No. Tm Channels	
Analog	22 ch (+0.2V to +5V)
Digital	15 ch (0V = "1", 5V = "0"
Commands	
Quantity	30
Amplitude	10 ± 0.7V
Duration	0.5 to 2.0 sec
Line to Line Scan Jitter	± 17 µsec max
Scan Sync Drift/24 hr	<3.0 µsec
A/D Conversion	
Quantizing Level	10 bits
Accuracy (15°C)	± 1/2 LSB
Diff. non-lin (15°C)	±1/2 LSB
Mac Error (10° - 30°C)	±1 LSB
Uncompensated Momentum	
Yaw Axis	0
Roll Axis	38 in-oz-sec, CCW, (+Y axis)
Pitch Axis	0
Max. Angular Momentum	<0.268 newton-m-sec
Data Sample Pulse from MIRP	
Duration	1.0 µsec
Rate	39.936 kpps
Amplitude	5.0V
Electronic Calibration	
Ramp-Cal (during space view)	1024 levels
Volt-Cal (during earth scene)	3 levels

Figure 18.1-2. System Performance Characteristics (Continued).

The AVHRR/3 is comprised of five modules which are assembled together into a single unit instrument. These modules are:

Scanner Module
Electronics Module
Radiant Cooler Module
Optical Subsystem
Baseplate Unit

An exploded view of the AVHRR/3 is shown in Figure 18.1-3. Descriptions of the modules are given in subsequent paragraphs.

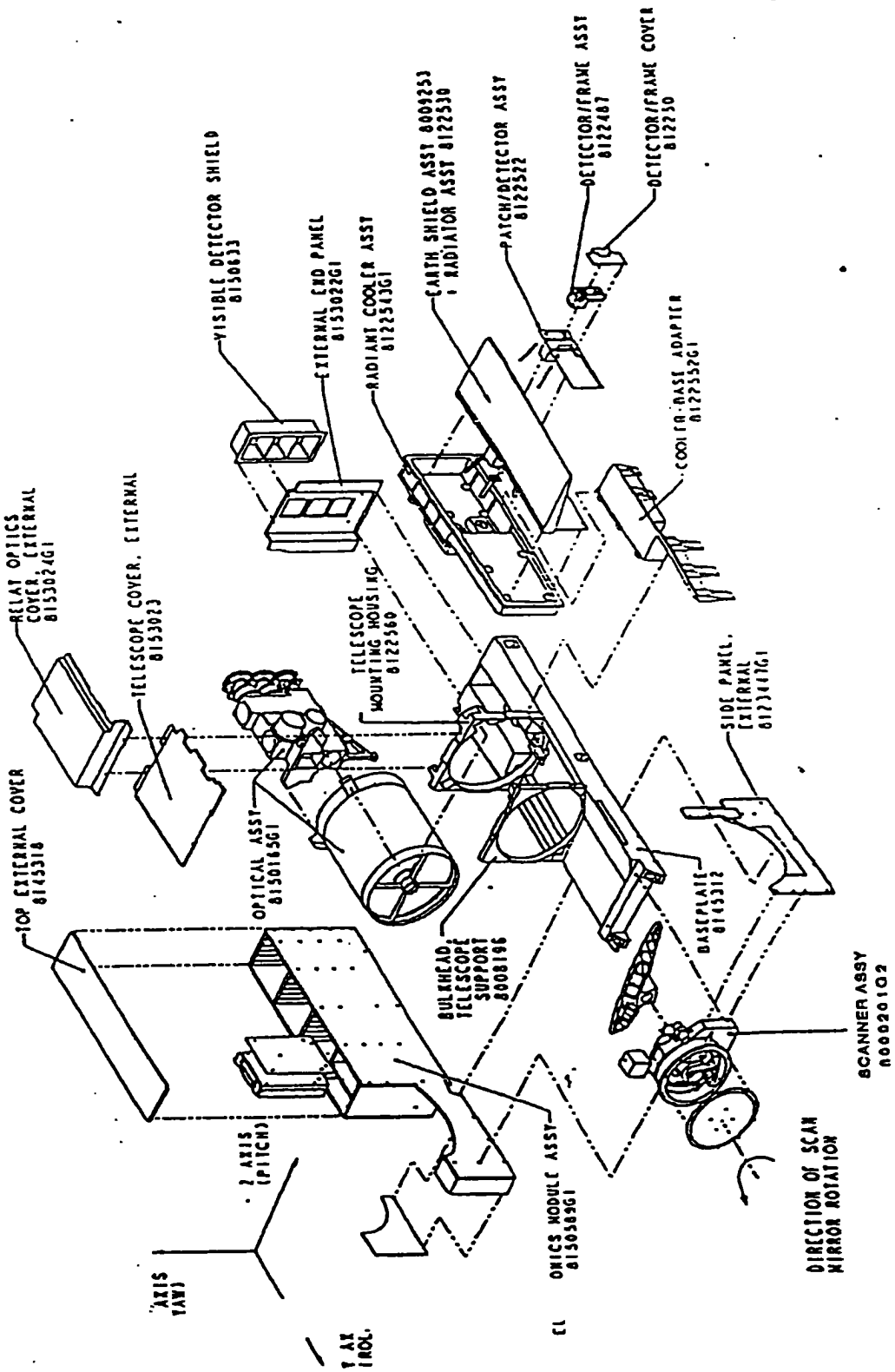

Figure 18.1-3. AVHRR/3 Exploded View.

18.1.2.2 Scanner Module

This module includes the scan motor, the mirror, and the scan motor housing. The scan motor is an 80 pole hysteresis synchronous motor. The motor has two power modes of operation and is normally operated in the high-power mode (~4.5 watts) in orbit in order to minimize scan line jitter. The scanner housing is an integral part of the motor and is made of beryllium. The scan mirror is also made of beryllium and is ~11.6 inches across the major axis and 8.25 inches across the minor axis. The scan motor rotates the mirror at the 360 RPM to produce a contiguous scan of the Earth scene. The line-to-line jitter is less than ±17 microseconds.

A diagram showing the signal position as a function of scan angle is given in Figure 18.1-4.

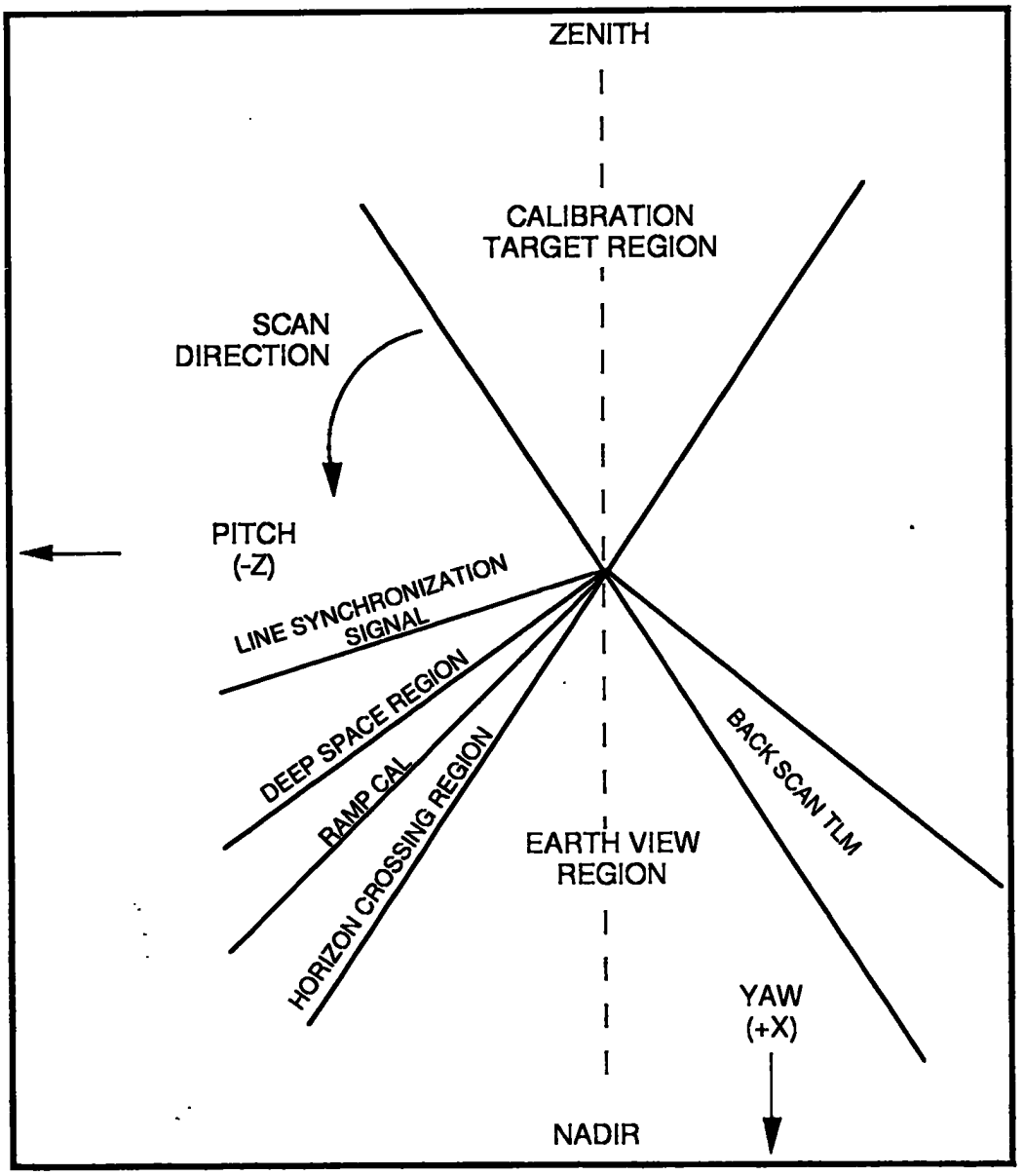

Figure 18.1-4. Signal Position as a Function of Scan Angle

18.1.2.3 Electronics Module

The electronics module is in two sections, both of which bolt onto the instruments' inboard side panel. The curved box (Reference Figure 18.1-3) is the motor power supply. Thirty electronic circuit assemblies are used to make up the electrical system of the AVHRR/3. Twenty-two of these are located in the electronics box. The preamplifiers for Channels 1, 2, and 3A are located on the relay optics assembly. The IR Channel 4 and Channel 5 preamplifiers are located on the optics side of the electronics box. Channel 3B preamplifier is located near the 3B detector on the radiant cooler. Channels 4 and 5 preamplifier modules are accessible without the removal of the instrument from the spacecraft.

18.1.2.4 Radiant Cooler Module

The radiant cooler module is made up of four basic assemblies. These are (1) the cooler housing, (2) the first stage radiator, (3) the patch or second stage radiator, and (4) the cooler cover. The first stage radiator is configured in such a manner as to shade most of its radiating area from the Earth by the cooler cover when the cover is deployed. A solenoid is used to deploy the cover. Once deployed, the cover cannot be closed. Mounted on the cold (105 K) patch are the three thermal infrared detectors. The patch has a 22.4 in^2 radiating area. The cooler housing surrounds the cooler on all sides except for the radiation area. The housing is vacuum sealed so that when the bench cooler is clamped to the front of the housing, a vacuum can be pulled on the entire cooler. The system is thus permitted to cool as it would in space by radiation to a cold target located in the bench cooler (except that the cold target is at the liquid nitrogen temperature of 77 K).

Multilayer insulation thermally separates the first stage radiator from the housing, and the first stage optical window is thermally isolated and heated several degrees warmer than the 171 K radiator temperature to prevent condensation on it. The patch is thermally isolated from the first stage by low emissivity surfaces (gold to gold) and cools to 98 K with no control power. During nominal operation the patch temperature is controlled at 105 K.

18.1.2.5 Optical Subsystem

The optical subsystem consists of two subassemblies, a collecting telescope and a relay optics unit. The telescope is an 8.0 inch diameter aperture, reflective Cassegrain of a focal design (collimated output). The relay optics split the telescope exit beam into six discrete spectral bands and focus them onto their respective field stops. The spectral bands are:

- Channel 1: 0.58 to 0.68 micrometers
- Channel 2: 0.725 to 1.00 micrometers
- Channel 3A: 1.58 to 1.64 micrometers
- Channel 3B: 3.55 to 3.93 micrometers
- Channel 4: 10.3 to 11.3 micrometers
- Channel 5: 11.5 to 12.5 micrometers

The instantaneous field of view is 1.3 by 1.3 milliradians in all channels and is defined by an aperature plate in Channels 1, 2, and 3A and by the detector active areas in Channels 3B, 4, and

5. In addition, the optical subsystem has been designed to meet the total system MTF requirements with the detectors laterally displaced for channel-to-channel registration.

Polarization effects have been minimized in Channels 1, 2, and 3A by passing the optical beam transmitted by the first visible/infrared beamsplitter through a second beamsplitter of the same type which is oriented so as to compensate for polarization introduced by the first beamsplitter.

18.1.2.6 Baseplate Unit

The baseplate unit is the common structure to which all other modules are secured. Dowel pins are used to establish and maintain alignment of the scanner and optics modules. Alignment of the cooler to the optics is established by shims.

18.1.3 ELECTRICAL AND MECHANICAL BLOCK DIAGRAMS

A block diagram of the instrument is given in Figure 18.1-5. Figure 18.1-6 shows the mechanical configuration of the instrument.

18.1.4 INTERFACE TIMING

The spacecraft provides the following input timing to the instrument.

18.1.4.1 Clocks

The spacecraft provides the .9984 MHz clock to the AVHRR/3. The function of this clock in the instrument is synchronized timing of instrument functions to the spacecraft clock. The .9984 MHz clock is supplied to the AVHRR/3 during launch.

18.1.4.2 Data Sample Pulse

The data sample pulses generated by the MIRP specify the exact time for simultaneously sampling the AVHRR analog data channels. The analog data is digitized and read out simultaneously on 10 AVHRR/3 data output lines (parallel read-out) at 5 predetermined times following each sample pulse.

Timing:

a. Pulse Width: One period of the .9984 MHz clock (T = 1.001602564 μsec).

b. Sampling Rate*: 39,936 sample pulses per sec (time between samples = 25T).

c. Data Word Rate to MIRP: Five 10-bit AVHRR/3 data words per sample pulse = 199,680 words per sec.

*AVHRR/3 data is sampled only at specified times during the Earth scene and backscan regions of each scan period and not on a continuous basis.

Phasing: Each sample pulse is phased so that a negative going edge of the .9984 MHz clock will occur during the high or true state of the sample pulse (see Figure 18.1-7).

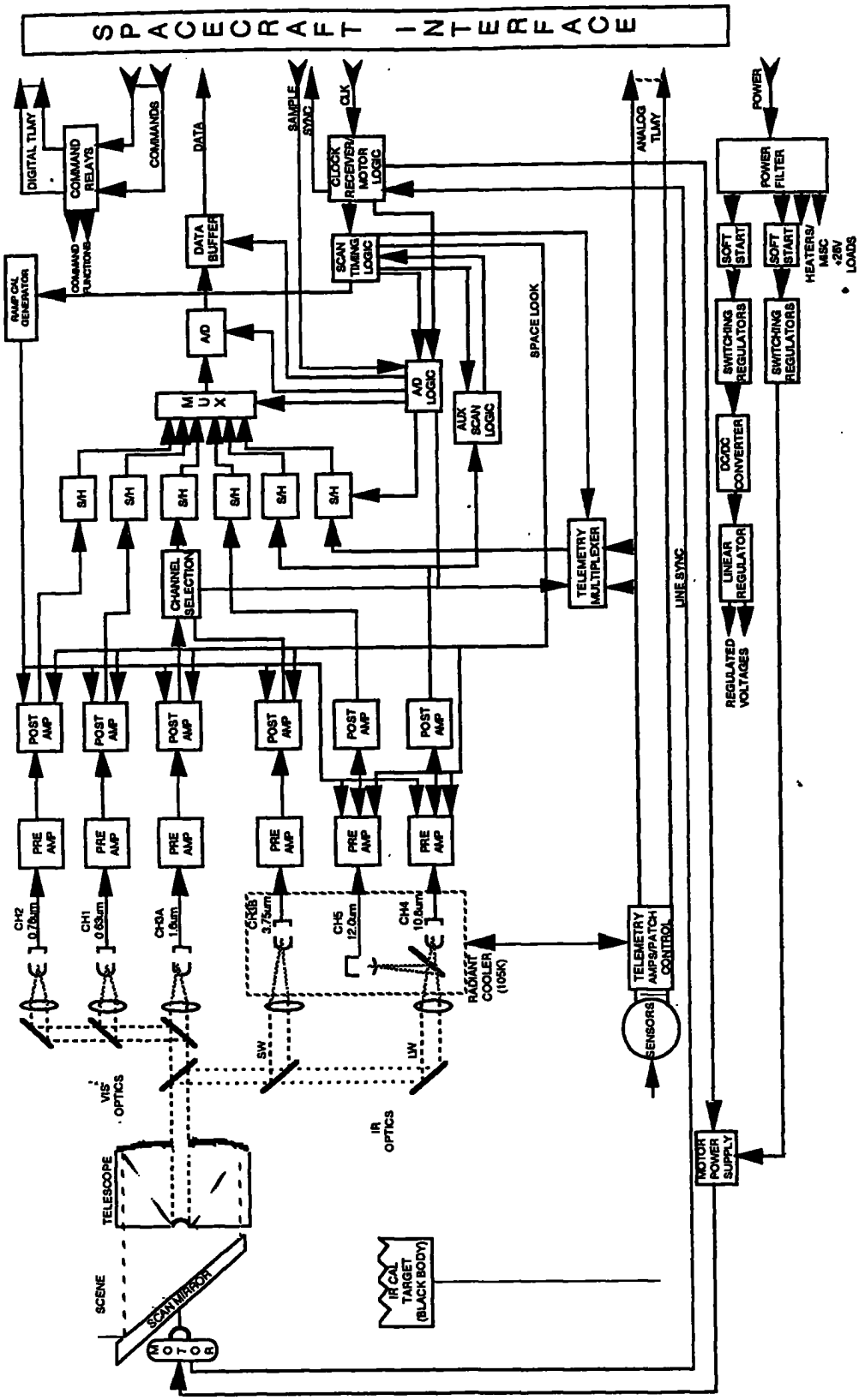

Figure 18.1-5. AVHRR/3 Electronics Block Diagram.

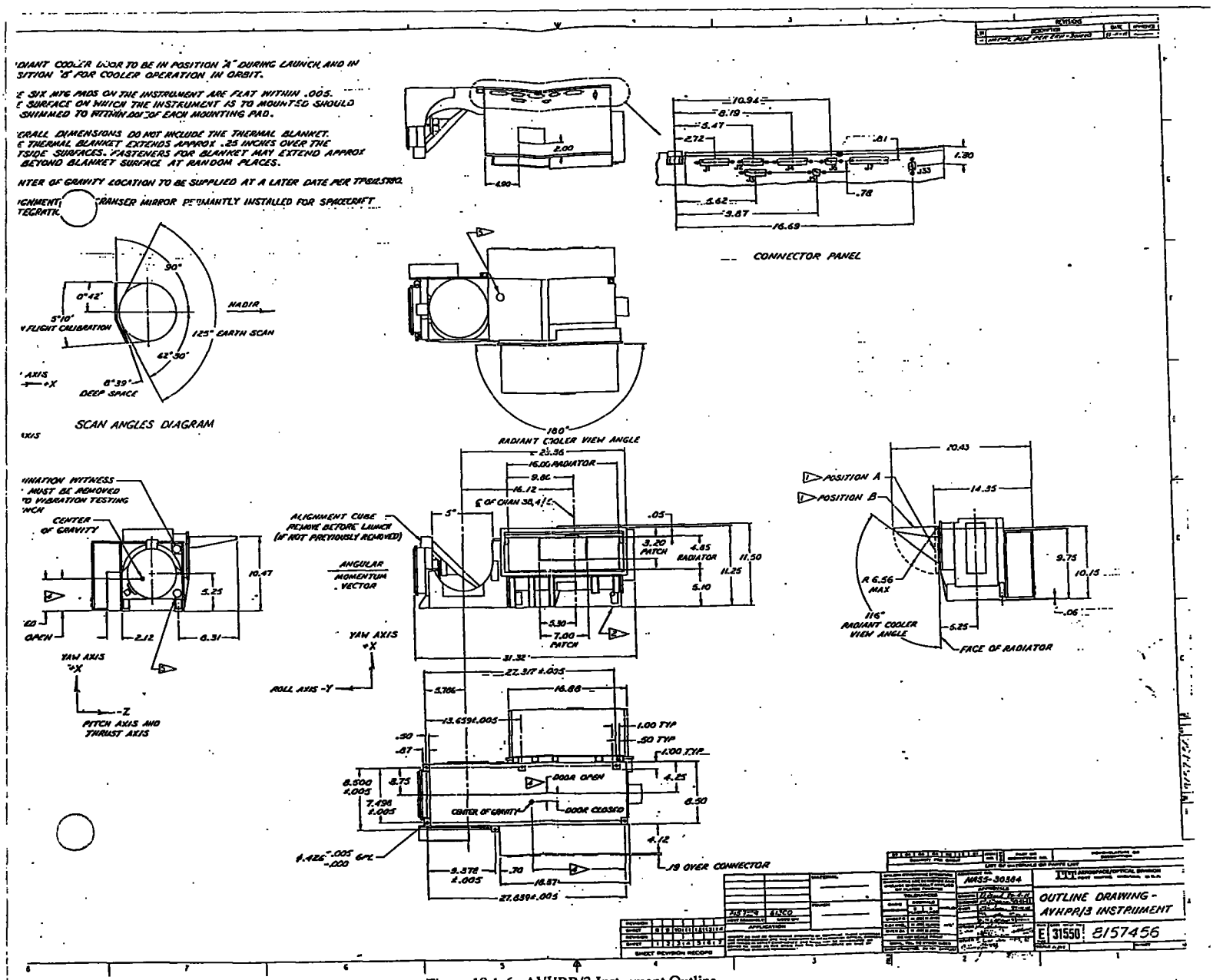

Figure 18.1-6. AVHRR/3 Instrument Outline.

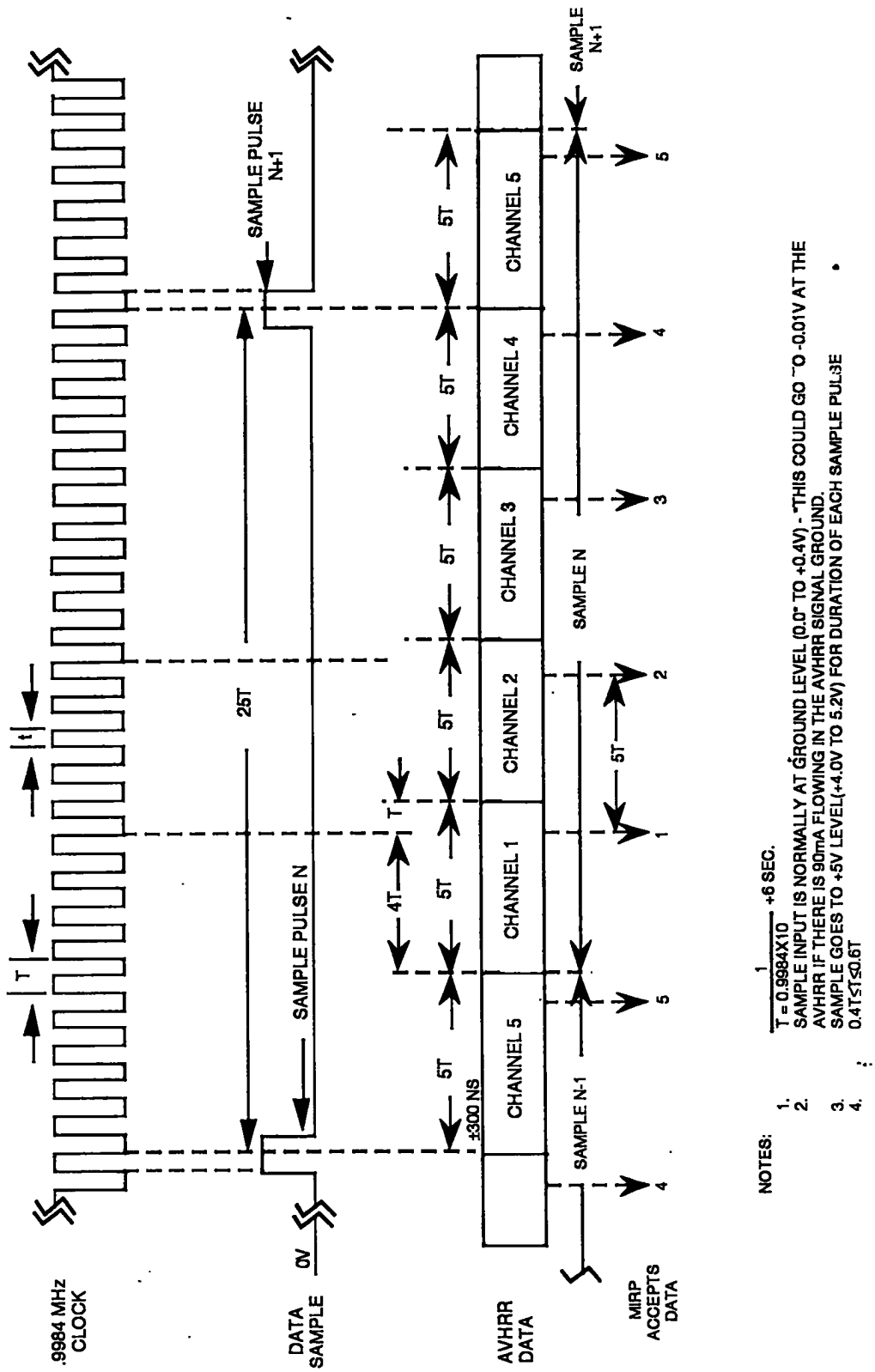

NOTES:

1. $T = \frac{1}{0.9984 \times 10^{+6}}$ SEC.
2. SAMPLE INPUT IS NORMALLY AT GROUND LEVEL (0.0" TO +0.4V) - "THIS COULD GO "O -0.01V AT THE AVHRR IF THERE IS 90mA FLOWING IN THE AVHRR SIGNAL GROUND.
3. SAMPLE GOES TO +5V LEVEL(+4.0V TO 5.2V) FOR DURATION OF EACH SAMPLE PULSE
4. $0.4T \leq t \leq 0.6T$

Figure 18.1-7. MIRP/AVHRR/3 Interface Timing.

18.1.5 INSTRUMENT TELEMETRY

The output data signals supplied by the instrument to the spacecraft fall into three categories: outputs to the MIRP, Analog telemetry, and Digital "B" telemetry. The specific signals supplied by the AVHRR/3 are detailed below.

18.1.5.1 AVHRR/3 Outputs to the MIRP

The data from each of the five active channels is digitized in the radiometer to a 10-bit word and brought out of the instrument as a 10-bit parallel digital output to the spacecraft MIRP. In addition to these digital signals, the line synchronization signal is also routed to the MIRP on a separate buffer isolated line.

Some differences exist when switching between Channels 3A and 3B. The Channel 3A Select and Channel 3B Select commands are received and stored in a latching relay. A set of contacts in this relay is used to indicate the relay status virtually instantaneously through the digital telemetry. The second set of contacts in the relay switches a logic level on the A/D logic board, which, in turn, is used by the A/D sample and hold board to switch the A/D input between Channel 3A and Channel 3B. This same logic level is also used by the 3A/3B select flag circuitry. Since the command relay is asynchronous, the data output will switch instantaneously between 3A or 3B, even if the scan is in the middle of a line. The select flag circuitry, however, operates differently.

When Channel 3B is selected, the patch temperature data is output every scanline (during the backscan), and every other scan line when 3A is selected. When switching from 3B to 3A, the zero volt marker between lines 5 and 6 indicates that they switch sometime during line 4. Therefore, there is one scan line of uncertainty when switching from 3B to 3A. When switching from 3A to 3B, the presence of patch temperature data between lines 11 and 12 indicates that the switch occurred sometime between lines 9 and 12. Therefore, there are two scan lines of uncertainty when switching from 3A to 3B.

18.1.5.1.1 Line Synchronization Pulse

A line synchronization pulse is sent to the MIRP at the beginning of each mirror scan. The characteristics of this pulse is as follows:

(a) Duration: 100 μsec

(b) Repetition Rate: 6 pps

(c) Pulse Level: The sync line output is normally at ground level (0.0 to +0.4V). The sync line output transitions to the +5V level (+2.40 to +5.25V) for the duration of each sync pulse.

18.1.5.1.2 Radiometric Data Lines

A separate analog video signal is generated within the AVHRR/3 for each radiometric channel in the instrument. The data for each channel is converted to a single 10-bit digital word prior to being transferred to the MIRP. Upon receipt of a data sample pulse, the digital words (one for each radiometric channel) is transferred sequentially to the MIRP. The data in each word is transferred by parallel readout of the 10-bit word through ten output data lines.

(1) Content: The information content of each data channel is shown in Figure 18.1-8.

(2) Digitization: 10-bit words.

(3) Output: Parallel readout, 10 bits.

(4) Output Timing: Initiated by each data sample pulse as shown in Figure 18.1-7. Timing details are as follows:

Transfer of AVHRR/3 digitized data is accomplished by 10 parallel lines representing parallel word transfer. At 5T ±300 nanoseconds after each sample time (the negative going edge of the clock which is coincident with the high or true state of the sample pulse), the AVHRR/3 transfers parallel digitized channel 1 data to an output register and holds it there for 5T ±300 nanoseconds. Data from the remaining AVHRR/3 channels is successively transferred into the output register as follows:

Channel 2 transfer time is 10T ±300 nanoseconds after sample time; data is held for 5T ±300 nanoseconds. Channel 3 transfer time is 15T ±300 nanoseconds; data is held for 5T ±300 nanoseconds. Channel 4 transfer time is 20T ±300 nanoseconds; data is held for 5T ±300 nanoseconds. Channel 5 transfer time is 25T ±300 nanoseconds;' data is held for 5T minimum, 10T maximum ±300 nanoseconds. Transfer of data from the AVHRR/3 output register to the spacecraft processor occurs 0.5T to 4.5T after the start of each channel output time interval.

(5) Sample Rate: The number of samples taken by the MIRP as a function of scan time shall be as shown in Figure 18.1-9.

(6) Pulse Level:

(a) A data "1" level shall be +2.40 to +5.25 Volts.
(b) A data "0" level shall be 0.0 to +0.4 Volts.

(7) Bit Position:

(a) The MSB of radiometric data shall be located on data line 1 for each channel.
(b) The LSB of radiometric data shall be located on data line 10 for each channel.

(8) Radiometric Range:

Scene		Channel. 1. 2. 3A*	Channel. 3B. 4. 5
VIS:	100% Albedo (White)	+6.1V±0.1V	
IR:	Space (Cold)		+6.2V±0.05V
VIS:	Black	+0.25V±0.005V	
IR:	335 K (Hot)		+0.3V±0.1V

	Channel					
	1	2	3A	3B	4	5
Deep Space (Clamp)	X	X	X	X	X	X
Ramp Calibration Signal (1)	X	X	X	X	X	
Earth Scene (Visible)	X	X	X			
Earth Scene (IR)				X	X	X
IR Target Temperature (2)				X	X	X
Cooler Patch Temperature				X	X	X
Backscan Target IR Data (3)				X	X	X

Notes:

(1) The ramp calibration signal consists of the output of a D/A generator which increases one step per revolution of the radiometer scanning system. A ramp is generated for every 1,024 scans of the radiometer. The ramp voltage varies from -0.025 to +6.475 volts in 1,023 steps of 0.00635 volt, and has a precision of 10 bits.

The output A/D converter has a range of 0 to 6.39375 volts in 1,023 steps of 0.00625 volts. As a result, the nominal ramp calibration in the A/D output skips a step approximately once every 62 scan revolutions, and once every 62 steps of the D/A ramp generation.

Channels 1, 2, and 3A have approximately five 0-volts, 0-count values at the beginning of the calibration ramp; Channels 3B, 4, and 5 have the five 0-volt, 1,023-count values at the beginning of the ramp.

Channels 1, 2, and 3A increment linearly with the scan count, except as previously noted, until the dual gain break point to 500 counts is reached. The range of ramp calibration counts is from 501 to 679 for scan lines 501 to 1,023 in Channel 1 and 2 and 501 to 577 for the same scan line count in Channel 3A.

Channels 3B, 4, and 5 ramp values increment linearly with scan line count, except as previously noted, and shall have approximately 14 6.39375-volt, 0-count end-of-ramp values. Refer to Figure 18.1-11 for calibration levels.

(2) The temperature of the backscan calibration target is measured using four platinum resistance detectors.

The signal from each of the platinum resistance temperature detectors in the radiometer housing calibration target (IR Target Temp.) is inserted into the composite analog video signal in each channel, one signal per scan line, following the start of the space scan as shown in Figure 18.1-10. The signal from the first temperature detector is inserted in the first scan line; the signal from the second temperature detector is inserted in the second scan line, etc., until all the temperature detectors have been interrogated. The scan line immediately following the line which contains the last temperature detector contains "0s" in at least the first six significant bit locations.

(3) The backscan Target IR Data is the Channel 3B, 4 and 5 IR output sampled at the time the scan mirror views the instrument backscan IR calibration target. This data, with the corresponding PRT IR Target Temp. data, provides a warm scene (nominally 288°K) calibration point.

Figure 18.1-8. AVHRR/3 Analog Channel Content.

AVHRR/3 Output Information	Begin Sample Period		End Sample Period		Number of Samples Generated
	Time (millisec)	Clock Counts	Time (millisec)	Clock Counts	
Detector: Space View	2.529	2,525	2.779	2,775	10
Electronic Ramp Cal.	3.756	3,750	3.781	3,775	1
Detector: Earth View	8.614	8,600	59.895	59,800	2,048
TLM: IR Target Temp.	65.78	65,675	65.805	65,700	1
TLM: Patch Temp.	66.006	65,900	66,031	65,925	1
None	-	-	-	-	0
Detector: IR Backscan	118.064	117,875	118.314	118,125	10
None	-	-	-	-	0

NOTES

(1) To is the leading edge of the AVHRR/3 line sync.
(2) T – 1.00160256 µs = one 0.9984 MHz clock period = one count
(3) All "Times" and "Counts" are in appropriate units after To.
(4) AVHRR Scan Period = 1/6 second = 166.67 ms.
(5) Nominal Nadir = To + 34.255 msec or To +34,200 counts.
(6) Sample Pulse Spacing = 25T during sample periods (39,933 pps).

Figure 18.1-9. MIRP Data Sample Intervals.

*Visible Channels 1, 2, and 3A have dual slope gain characteristics with slope intercepts as follows:

Channel	% Albedo	Counts
1, 2	0-25%	0-500
	26-100%	501-1000
3A	12.5%	0-500
	12.6-100%	501-1000

18.1.5.1.3 Calibration Data

(1) Line by Line Calibration: The AVHRR/3 calibration data consists of the following parameters which are inserted in each scan line:

Parameter	Channel Location	Timing
a) Space Sample	Figure 18.1-8	Figures 18.1-9 & 18.1-10
b) Elec. Calib. Ramp	Figure 18.1-8	Figures 18.1-9 & 18.1-10
c) IR Target Temp. TLM	Figure 18.1-8	Figures 18.1-9 & 18.1-10
d) Patch Temp. TLM	Figure 18.1-8	Figures 18.1-9 & 18.1-10
e) IR Target Sample	Figure 18.1-8	Figures 18.1-9 & 18.1-10

See Figure 18.1-11 for the nominal voltage calibration.

Scan Timing			
Scan Timing Units (1)			
0	to	0.1	Line Synch
0.5	to	1.5	MIRP Precursor Time
		1.8	Space View Start
1	to	3.5	Space Sample
3.5	to	4	Ramp Cal.
		4.13	Space End - Worst Case Early - S/C Attitude and Orbit
		4.8	Space End - Worst Case Early - S/C Attitude
		5.3	Space End - Nominal
		5.8	Space End - Worst Case Late - S/C Attitude
		34.2	NADIR Nominal
		62.6	Space Start - Worst Case Early - S/C Attitude
		63.1	Space Start - Nominal
		63.6	Space Start - Worst Case Late - S/C Attitude
65.6	to	65.8	IR Target Temp (2)
65.8	to	66	Patch Temp
		117.1	IR Cal Target - Full View Start
117.6	to	118.4	IR Cal Target Sample (3)
		119	IR Target - Full View End
165	to	166.4	MIRP Precursor Time
Simulated Voltage Calibration Signals			
4	to	65.5	Simulated Earth Scene
117.6	to	118.4	Simulated Cal Target
Auxiliary Scan Timing			
1.8	to	1.9	1st Space Sample
3.4	to	3.5	2nd Space Sample
51.2	to	76.8	Back Edge Space Blanking
160	to	12.9	Space Window

Notes:
(1) Scan Timing Unit (STU) = 1.001602564 milliseconds = 1,000 counts
(2) Backscan PRT
(3) Backscan B.B. Target

Figure 18.1-10. Scan/Calibration Timing (Nominal Orbit).

Simulated Data	D/A Ramp Count (1)	Instrument A/D Output Count (2)		
		Channel 1, 2	Channel 3A	Channel 3B, 4, 5
Space Clamp	43	40	40	992
Ramp Cal. (Lo)	0	-3.0 (3)	-3.0 (3)	1,035.7 (3)
Ramp Cal. (Hi)	1,023.00	679.4	576.9	-4.4 (3)
Earth Lvl 1	299	296	296	731.7
Earth Lvl 2	555	517.9	507.7	471.1
Earth Lvl 3	811	606.2	545.5	211.2
Backscan B. B.	939	650.4	564.5	81
Dual Slope VBP (4)	TBD	500	500	-

NOTES: (1) 1 count = 0.00635V
(2) 1 count = 0.00625V
(3) Over range for A/D, actual counts shall be 0 or 1,023
(4) Dual slope Voltage Break Point (VBP) not included in voltage calibration, data provided for slope determination only.

Figure 18.1-11. AVHRR/3 Voltage Calibration Levels (All levels are nominal values).

(2) Simulated Calibration Signal: The simulated calibration signal is substituted for the actual detector output upon command. The following data appears in all channels.

	Parameter	Timing
a)	Space Sample	Figures 18.1-9 & 18.1-10
b)	Ramp Calibration Signal	Figures 18.1-9 & 18.1-10
c)	Simulated Earth Scan*	Figures 18.1-9 & 18.1-10
d)	Simulated Cal. Targets	Figures 18.1-9 & 18.1-10

*The simulated Earth scan provides three voltage levels in a cyclic pattern on successive scan lines for each channel. This provides an effective 3 point voltage calibration check. See Figure 18.1-4 for the nominal Earth scan levels.

18.1.5.2 Analog Telemetry

The AVHRR/3 analog telemetry is available at the instrument interface. Three different subcoms : (32, 16, 1-second) generated by the TIP are used to sample spacecraft analog telemetry. TIP minor frame words 9, 10, and 11 are dedicated to these subcoms, respectively.

No.	Telemetry Point Name	TIP Sub-Com	TIP Minor Frame	TIP Channel No.	Range	Scale Factor
1	Patch Temperature	32	45	45	90.7-115.5K	0.1935V/K
2	Patch Temperature Extended	32	29	29	99.4-316K	0.02216V/K
3	Patch Power	32	5	5	0.08-0mW	0.067V/mW at 32mW out
4	Radiator Temperature	32	53	53	148.7-317.3K	0.0285V/K
5	Blackbody Temp.1	32	93	93	5.086-44.97.4C	0.1203V/C
6	Blackbody Temp.2	32	165	165	5.086-44.97.4C	0.1203V/C
7	Blackbody Temp.3	32	173	173	5.086-44.97.4C	0.1203V/C
8	Blackbody Temp.4	32	181	181	5.086-44.97.4C	0.1203V/C
9	Electronics Current	16		372	39.3-982.5mA	5.088mV/mA
10	Motor Current	16		380	12-300mA	16.6mV/mA
11	Earth Shield Position	32	37	37	3 Levels	>4.0V Open
12	Electronics Temperature*	32	69	69	10.8-38.73C	0.1717V/C
13	Cooler Housing Temperature*	32	61	61	3.95-33.24C	0.129V/C
14	Baseplate Temperature*	32	77	77	3.95-33.24C	0.129V/C
15	Motor Housing Temperature*	32	85	85	3.95-33.24C	0.129V/C
16	A/D Converter Temperature*	32	189	189	44.51-84.49C	0.129V/C
17	Detector #3 Bias Volt.	32	21	21	-13 - -11V	0.23V/V
18	Blackbody Temp. IR CH 3B	32	197	197	**	**
19	Blackbody Temp. IR CH 4	32	205	205	**	**
20	Reference Voltage	32	13	13	0.266 - 6.657V	0.75V/V
21	Blackbody Temp. IR CH 5	32	252	252	**	**
22	Detector #5 Bias Volt.	32	247	247	-13 - -11V	0.23V/V

*For these telemetry points, +5V correlates to the low end of the temperature range, +0.2V correlates to the high end.
**Exact coefficients can be obtained in the instrument Alignment and Calibration Handbook.

Figure 18.1-12. AVHRR/3 Analog Telemetry.

The analog telemetry points provided by the AVHRR/3 are listed in Figure 18.1-12. The analog telemetry does not draw power from the spacecraft +28 volt telemetry bus. The telemetry is available when one or more of the following conditions are satisfied: 1) scan motor/telemetry is ON; 2) electronics/telemetry is ON; or 3) telemetry is locked ON. A detailed description of each telemetry point is as follows:

1. Patch Temperature: This telemetry point measures the output from the platinum temperature sensor located on the radiant cooler patch which contains the IR detectors. The amplifier gain/offset is adjusted for the patch temperature range.

2. Patch Temperature Extended: This telemetry point measures the output from the platinum temperature sensor located on the radiant cooler patch which contains the IR detectors. The amplifier gain/offset is adjusted for the extended temperature range of the patch.

3. Patch Power: This telemetry point measures the DC voltage being applied to the control heater on the radiant cooler patch which contains the IR detector.

4. Radiator Temperature: This telemetry point measures the output from the platinum temperature sensor located on the first stage (warmer stage) of the radiant cooler.

5-8. Blackbody Nos. 1, 2, 3, 4: These telemetry points measure the outputs of platinum temperature sensors Nos. 1 through 4, respectively, located on the blackbody calibration target.

9. Electronics Current: This telemetry point measures the DC current load on the +28 volt Bus (pins 1 and 2 on J3). This is directly proportional to the DC current into the power converters for the remaining electronics not including the motor power supply.

10. Motor Current: This telemetry point measures the DC current load on the +28 volt (motor) Bus (pins 3 and 4 on J3). This is directly proportional to the DC current into the scan motor power supply.

11. Earth Shield Position: This telemetry point indicates the status of the radiant cooler Earth shield.

12. Electronics Temperature: This telemetry point measures the output of the thermistor located inside the electronics box.

13. Cooler Housing Temperature: This telemetry point measures the output from a thermistor located on the radiant cooler housing.

14. Baseplate Temperature: This telemetry point measures the output of the thermistor located on the baseplate.

15. Motor Housing Temperature: This telemetry point measures the output from a thermistor located on the scan motor housing.

16. A/D Converter Temperature: This telemetry point measures the output of a thermistor located inside the A/D converter at the point of maximum sensitivity to heat.

17. Detector Bias Voltage Channel 4: This telemetry point measures a voltage directly proportional to the regulated -12 volts DC which supplies the Channel 4 IR detector bias current.

18. Detector Bias Voltage Channel 5: This telemetry point measures a voltage directly proportional to the regulated -12 volts DC which supplies the Channel 5 IR detector bias current.

19. Blackbody Temperature, IR Channel 3B: This telemetry point measures the output of a sample-and-hold circuit which samples the IR Channel 3B analog data signal once each scan line when viewing the blackbody calibration target.

20. Blackbody Temperature, IR Channel 4: This telemetry point measures the output of a sample-and-hold circuit which samples the IR Channel 4 analog data signal once each scan line when viewing the blackbody calibration target.

21. Blackbody Temperature, IR Channel 5: This telemetry point measures the output of a sample-and-hold circuit which samples the IR Channel 5 analog data signal once each scan line when viewing the blackbody calibration target.

22. Reference Voltage: This telemetry point measures a DC voltage proportional to the +6.4 volt reference voltage source in the electronics.

18.1.5.3 Digital "B" Telemetry

The Digital "B" one-bit status telemetry shall be available at the instrument interface at all times. The 3.2 second subcom generated by the TIP will sample each Digital "B" telemetry point once every 3.2 seconds.

The Digital "B" telemetry points provided by the AVHRR/3 are listed in Figure 18.1-13. Each of the 15 Digital "B" telemetry points listed in Figure 18.1-13 indicates the status of the respective pairs of commands listed in Figure 18.1-14.

18.1.5.4 Digital "A" Telemetry

The AVHRR/3 does not utilize Digital "A" telemetry.

No.	Telemetry Point Name	State*		TIP		
		Logic "1"	Logic "0"	Minor Frame	Channel No.	Word 8 Bit No.
1	Scan Motor/Telemetry Status	On	Off	20	244	8
2	Electronics/Telemetry Status	On	Off	20	212	7
3	Channel 1 Status	On	Off	21	53	2
4	Channel 2 Status	On	Off	21	85	3
5	Channel 3A Status	On	Off	21	117	4
6	Channel 3B Status	On	Off	21	149	3
7	Channel 4 Status	On	Off	20	84	3
8	Channel 5 Status	On	Off	21	181	6
9	Channel 3A/3B Select Status	3A	3B	26	218	7
10	Voltage Calibrate Status	On	Off	20	148	5
11	Cooler Heat Status	On	Off	20	180	6
12	Scan Motor Mode Status	High Power	Low Power	20	116	4
13	Telemetry Lock Status	Locked On	Not Locked On	21	21	1
14	Earth Shield Status	Deploy	Disable	20	20	1
15	Patch Control Status	On	Off	20	52	2

*Logic "1" is a "True" or "0" V "Low Voltage" state.

Figure 18.1-13. AVHRR Digital "B" Telemetry.

CMD#	Description	Command Mnemonic	Description
		Power Commands	
1	Scan Motor/Telemetry ON	ASMTN	This command shall turn ON the scan motor, scan drive electronics, and the first of 3 parallel power switches for housekeeping telemetry. Specifically, this command applies power to: a. Electronics sw. regulator b. Motor sw. regulator c. Power Converter d. +/-15V regulators e. +5V motor logic regulator f. Clock receiver g. Motor logic h. Analog telemetry circuits i. Patch temperature control
2	Scan Motor/Telemetry OFF	ASMTF	This command shall turn OFF the scan motor, scan drive electronics, and the first of 3 parallel power switches for housekeeping telemetry.
3	Electronics/Telemetry ON	AELTN	This command shall turn ON the radiometer electronics (except the scan drive electronics) for all channels in the ENABLE mode, and the second of 3 parallel power switches for housekeeping telemetry. Specifically, this command applies power to:

Figure 18.1-14. AVHRR/3 Commands.

CMD#	Description	Command Mnemonic	Description
3 (Cont.)			a. Electronics sw. regulator b. Power Converter c. +/-15V regulators d. +5V motor logic regulator e. +5V electronics regulator f. Analog telemetry circuits g. A/D converter h. Scan timing logic i. Clock receiver j. Motor logic k. Patch temperature control
4	Electronics/Telemetry OFF	AELTF	This command shall turn OFF the radiometer electronics and the second of 3 parallel power switches for housekeeping telemetry.
5	Channel 1 (0.63μ) Enable	ACH1E	If "Electronics ON" has been executed, applies power to: a. Channel 1 Pre-amplifier b. Channel 1 Post-amplifier
6	Channel 1 (0.63μ) Disable	ACH1D	Removes power from: a. Channel 1 Pre-amplifier b. Channel 1 Post-amplifier
7	Channel 2 (0.86μ) Enable	ACH2E	If "Electronics ON" has been executed, applies power to: a. Channel 2 Pre-amplifier b. Channel 2 Post-amplifier
8	Channel 2 (0.86μ) Disable	ACH2D	Removes power from: a. Channel 2 Pre-amplifier b. Channel 2 Post-amplifier
9	Channel 3A (1.6μ) Enable	AC3AE	If "Electronics ON" has been executed, applies power to: a. Channel 3A Pre-amplifier b. Channel 3A Post-amplifier
10	Channel 3A (1.6μ) Disable	AC3AD	Removes power from: a. Channel 3A Pre-amplifier b. Channel 3A Post-amplifier
11	Channel 3B (3.7μ) Enable	AC3BE	If "Electronics ON" has been executed, applies power to: a. Channel 3B Pre-amplifier b. Channel 3B Post-amplifier
12	Channel 3B (3.7μ) Disable	AC3BD	Removes power from: a. Channel 3B Pre-amplifier b. Channel 3B Post-amplifier
13	Channel 4 (10.8μ) Enable	ACH4E	If "Electronics ON" has been executed, applies power to: a. Channel 4 Pre-amplifier b. Channel 4 Post-amplifier
14	Channel 4 (10.8μ) Disable	ACH4D	Removes power from: a. Channel 4 Pre-amplifier b. Channel 4 Post-amplifier
15	Channel 5 (12.0μ) Enable	ACH5E	If "Electronics ON" has been executed, applies power to: a. Channel 5 Pre-amplifier b. Channel 5 Post-amplifier

Figure 18.1-14. AVHRR/3 Commands (Continued).

CMD#	Description	Command Mnemonic	Description
16	Channel 5 (12.0μ) Disable	ACH5D	Removes power from: a. Channel 5 Pre-amplifier b. Channel 5 Post-amplifier
17	Cooler Heat ON	ACHON	If "Electronics ON", "Motor ON", or "Telemetry ON" has been executed, apply power to: a. Radiator Decontamination Heater b. Patch Decontamination Heater
18	Cooler Heat OFF	ACHOF	Removes power from: a. Radiator Decontamination Heater b. Patch Decontamination Heater
19	Telemetry Locked ON	ATLON	This command shall turn ON the third of 3 parallel power switches for housekeeping telemetry, thereby locking the telemetry ON independent of Commands 1 through 4. Specifically, this command applies power to: a. Electronics sw. regulator b. Power Converter c. +/-15V regulators d.. +5V motor logic regulator e. Clock receiver f. Motor logic g. Analog telemetry circuits h. Patch temperature control
20	Telemetry Not Locked ON	ATNLO	This command shall turn OFF the third of 3 parallel power switches for housekeeping telemetry, thereby returning the telemetry to the control of Commands 1 through 4.
21	Earth Shield Deploy	AESDP	Applies power to Earth shield circuitry
22	Earth Shield Disable	AESDI	Removes power from Earth shield circuitry
23	Patch Control ON	APCON	If "Telemetry ON" or "Scan Motor/Telemetry ON" has been executed, applies controlled heat to patch
24	Patch Control OFF	APCOF	Removes heat from patch
		Mode Commands	
25	Channel 3A Select	AC3AS	Selects Channel 3A for Channel 3 data output from AVHRR/3
26	Channel 3B Select	AC3BS	Selects Channel 3B for Channel 3 data output from AVHRR/3
27	Voltage Calibrate ON	AVCON	If "Electronics ON" has been executed: a. Deactivates IR and daylight detectors that are enabled b. Provides simulated Earth scene and backscan video for all enabled channels
28	Voltage Calibrate OFF	AVCOF	If "Electronics ON" has been executed: a. Activates IR and daylight detectors that are enabled b. Deactivates simulated Earth scene and backscan video
29	Scan Motor High Mode	ASMHM	If "Motor ON" has been executed, set motor switch regulator voltage to HIGH LEVEL
30	Scan Motor Low Mode	ASMLM	If "Motor ON" has been executed, set motor switch regulator voltage to LOW LEVEL

Figure 18.1-14. AVHRR/3 Commands (Continued).

18.1.5.5 Exceptions

The instrument output signals conform to Sections 3.1.6 and 3.1.8 of the GIIS. The exceptions to the above specification are as follows:

1. Analog Telemetry: The analog telemetry outputs are referenced to signal ground. The AVHRR/3 does use the +28V Analog Telemetry Bus or ground. Since up to 90 mA of signal current may be flowing through the signal ground, the telemetry calibration required by Section 3.1.6.3 of the GIIS is not valid. Errors of up to 0.01V may occur due to the IR drop from the AVHRR/3 to "star" ground which is used as a reference by the TIP.

2. Digital "B" Telemetry: All Digital "B" telemetry circuits are powered by the +10V Spacecraft Interface Bus instead of internal AVHRR/3 power. This is in conflict with Section 3.1.3.6 of the GIIS. The Digital "B" outputs are referenced to the interface ground instead of signal ground.

3. Section 3.1.8.4 of the GIIS is not applicable.

18.1.6 COMMANDS

The spacecraft provides the command inputs listed below to the AVHRR/3.

For "Level" commands, the "ON", "True", or "Low" level is indicated by a Logic "1" or a zero volt level. The "OFF", "False", or "High" level is indicated by a Logic "0" or +10 volt level for CMOS logic.

The AVHRR/3 commands can be further classified as Power or Mode Commands. The function of each command is detailed in Figure 18.1-14.

18.1.6.1 Safe State Definition

The AVHRR/3 safe state definition for the NOAA K, L, and M spacecraft is as follows:

- AVHRR Scan Motor/Telemetry ON
- AVHRR Electronics/Telemetry OFF
- AVHRR Channel 1 Disable
- AVHRR Channel 2 Disable
- AVHRR Channel 3A Disable
- AVHRR Channel 3B Disable
- AVHRR Channel 4 Disable
- AVHRR Channel 5 Disable
- AVHRR Voltage Calibrate OFF
- AVHRR Patch Control Low Mode

- AVHRR Cooler Heat OFF
- AVHRR Scan Motor High Mode
- AVHRR Telemetry Locked ON
- AVHRR Earth Shield Disable
- AVHRR Patch Control ON

18.1.6.2 Power Down Mnemonic Sequence

The following power down sequence is used in all cases.

- [ACH1D] Channel 1 Disable
- [ACH2D] Channel 2 Disable
- [AC3AD] Channel 3A Disable
- [AC3BD] Channel 3B Disable
- [ACH4D] Channel 4 Disable
- [ACH5D] Channel 5 Disable
- [AC3AS] Channel 3A Select
- [AELTF] Electronics/Telemetry OFF
- [ASMTF] Scan Motor/Telemetry OFF
- [ACHOF] Cooler Heater OFF
- [APCOF] Patch Control OFF
- [ATLON] Telemetry Locked ON*
- [AESDI] Earth Shield Disable
- [AVCOF] Voltage Calibrate OFF
- [ASMHM] Scan Motor High Mode

*Telemetry Locked ON is required to provide instrument analog telemetry power.

18.1.6.3 Power Up Mnemonic Sequence

18.1.6.3.1 Routine Power Up - See activation sequence in Section 18.1.9.

18.1.6.3.2 Power Up from Safe State

The AVHRR/3 is not to be powered up from Sate State until the NASA/GSFC Instrument Manager has been consulted.

18.1.7 MIRP PROCESSING

This section is provided as an overview of the AVHRR/3 data processing that takes place in the Spacecraft Manipulated Information Rate Processor (MIRP). The MIRP sends a data sample pulse to the AVHRR/3 digital output timing logic which results in the sequential transfer of a data word for each radiometric channel. The MIRP processes these data into the following four outputs.

18.1.7.1 Automatic Picture Transmission (APT)

Any two of the six AVHRR/3 channels can be command-selected for processing. This data undergoes the following:

(a) Resolution reduction by utilizing only one out of every three scans and averaging the data within the line over an area equivalent to approximately four field-of-views (FOVs) at nadir.

(b) Geometric correction by the averaging algorithm which effectively translates the data in time so that each sample represents approximately 2 nmi of sweep of the Earth's surface. This translation reduces the perspective effect due to the Earth's curvature and the satellite altitude.

(c) Digital to Analog - The digitally processed APT data are converted to a 2080 Hz bandwidth analog signal, amplitude modulated onto a 2.4 kHz carrier, and bandwidth limited to 4160 Hz in preparation for transmission by the VHF transmitters.

18.1.7.2 Global Area Coverage (GAC)

MIRP produces the GAC output by combining processed AVHRR/3 data with the TIP data. The GAC frame rate is 2 frames per sec; that is, it is one third of the AVHRR/3 scan rate. The GAC processing of the AVHRR/3 data makes the frame rates directly compatible by only using the data from every third AVHRR/3 scan. The MIRP further reduces the data by producing only one output sample for each six input samples. The TIP word and frame rate is directly compatible with the GAC word and frame rate; five TIP minor frames are inserted (at 0.1 seconds per frame) into the GAC frame each 0.5 seconds. Two parity bits are added to the 8-bit TIP word to form the 10-bit MIRP word. The GAC output is supplied only to the spacecraft DTR Input Selector Unit of the XSU, and it is, therefore, only available for transmission from the tape recorders.

18.1.7.3 High Resolution Picture Transmission (HRPT)

MIRP produces the HRPT and the LAC outputs by combining unprocessed AVHRR/3 data with TIP data. The basic frame rate and data rate of the HRPT is compatible with the AVHRR/3. Therefore, only buffering is required to construct the HRPT frame from the AVHRR/3 data. However, since the TIP frame rate is only one third that required to fill the HRPT frame, the TIP data must be repeated three times. This is accomplished by repeating the five TIP minor frames (104 words each) in each of three HRPT frames. As in GAC, two parity bits are added to the 8-bit TIP word to form the 10-bit MIRP word. The HRPT output is supplied to the S-band transmitter input control for real-time transmission.

18.1.7.4 Local Area Cover (LAC)

LAC is, by definition, recorded HRPT; thus, the LAC output is supplied only to the spacecraft DTR input selector for recording.

18.1.8 POWER INPUT AND PROFILE

The main power required by the AVHRR/3 is taken from the +28V DC Main Bus. The AVHRR/3 utilizes the +10V Interface Bus for commands and for Digital "B" command verification telemetry.

The +28V DC input from the spacecraft is regulated to obtain isolation from spacecraft voltage variations, converted to develop a system ground, and re-regulated to obtain noise rejection and precision. The average orbital power required by the instrument from the +28V Main Bus for specified operating modes is shown in Figure 18.1-15.

18.1.9 ACTIVATION AND EVALUATION (A&E) PROCEDURES AND TIMELINE

The activation sequence for the AVHRR/3 instrument with a 30°C radiant cooler decontamination heater is as follows:

(a) Commands Prior to Launch - Scan Motor/Telemetry ON (ASMTN), Scan Motor High Mode (ASMHM), and Telemetry Locked ON (ATLON).

(b) Fairbanks 1 Commands - Electronics/Telemetry ON (AELTN), repeat Telemetry Locked ON (ATLON), and Cooler Heat ON (ACHON).

(c) Fairbanks 3 Commands - Channel 1 Enable (ACH1E), Channel 2 Enable (ACH2E), and Channel 3A Enable (AC3AE).

(d) Wallops 202 or 216 Commands - Command spacecraft 28 volt bus current, analog telemetry channel 296, into 1 second dwell mode prior to Earth Shield Deploy (AESDP), wait until the telemetry confirms that the door is open and send Earth Shield Disable (AESDI), Cooler Heat OFF (ACHOF), Patch Control ON (APCON), and command spacecraft 28 volt bus current 1 second dwell mode off.

Note: The cooler must be off for at least 24 hours (14 orbits) prior to proceeding to the next step.

(e) Wallops 217 or 230 Commands - Channel 3B Enable (AC3BE), Channel 4 Enable (ACH4E), and Channel 5 Enable (ACH5E).

18.1.10 OPERATIONAL MODES

18.1.10.1 Launch Mode

The AVHRR/3 configuration during launch is as follows:

- Scan Motor/Telemetry ON
- Electronics/Telemetry OFF
- Telemetry Locked ON
- Channel 1 Disable
- Channel 2 Disable
- Channel 3A Disable

Function	Power	Norm Power	Op. Min. Power	Telem. Only	Launch Phase	Acquis. Phase	Instr. Off	Decon. Phase (2)	Post-Launch Checkout
Analog Telem.	2.28W	X	X	X	X	X		X	X
A-D & Electronics	9.11W	X	X						X
Scan Motor High	5.62W	X			X	X		X	X
Scan Motor Low	4.65W		X						
Motor Logic	1.4W	X	X	X				X	X
Channel 1	1.06W	X	X		X	X			X
Channel 2	1.06W	X							X
Channel 3A	1.17W	X							X
Channel 3B	1.01W	X							
Channel 4	1.40W	X							
Channel 5	1.57W	X							
Cooler Heater	22.92W					6W		22.92W	22.92W
Cooler Cover Dep	56.9W (3)					X			
Standby Heater	22.80W (4)						X		
		25.7W	18.5W	3.7W	9.3W	15.3W	22.8W	32.2W	44.62W

NOTES

(1) Nominal values subject to typical tolerance of parts and circuits.

(2) Initial decontamination period lasts two weeks. Subsequent decontamination is approximately equal to one week duration as required.

(3) Required only once for a period of approximately one sec.

(4) Spacecraft supplied power. Maintains AVHRR at 14°C.

Figure 18.1-15. AVHRR/3 Power Profile.

- Channel 3B Disable
- Channel 4 Disable
- Channel 5 Disable
- Channel 3A Select
- Cooler Heater OFF
- Patch Control OFF
- Earth Shield Disable
- Voltage Calibrate OFF
- Scan Motor High Mode

18.1.10.2 Post-Launch Check-out Phase

The AVHRR/3 configuration during post-launch checkout is:

- Scan Motor/Telemetry ON
- Electronics/Telemetry ON

- Telemetry Locked ON
- Channel 1 Enable
- Channel 2 Enable
- Channel 3A Enable
- Channel 3B Disable
- Channel 4 Disable
- Channel 5 Disable
- Cooler Heater ON
- Earth Shield Disable
- Voltage Calibrate OFF
- Scan Motor High Mode

18.1.10.3 Orbit Mode

The normal on-orbit operational mode is as follows:

- Scan Motor/Telemetry ON
- Electronics/Telemetry ON
- Telemetry Locked ON
- Channel 1 Enable
- Channel 2 Enable
- Channel 3A Enable
- Channel 3B Enable
- Channel 4 Enable
- Channel 5 Enable
- Channel 3A Select
- Cooler Heater OFF
- Patch Control ON
- Earth Shield Disable
- Voltage Calibrate OFF

- Scan Motor High Mode

18.1.11 CALIBRATION REQUIREMENTS

The AVHRR/3 self-calibrates when on-orbit.

18.1.12 ROUTINE COMMAND REQUIREMENTS

Command requirements are shown in Section 18.1.6 of this document.

18.1.13 EVALUATION OF NOMINAL PERFORMANCE AND TREND REQUIREMENTS

On-orbit nominal performance of the AVHRR/3 is represented in Figure 18.1-16. The on-orbit temperatures and currents levels should be within the operating limits shown in Figures 18.1-2.

18.1.14 CONSTRAINTS

The various modes of operation have specific requirements (constraints) that must be met, either prior to initiation of a mode or after it has been established. Constraints imposed for the various operating modes are listed in the following paragraphs.

18.1.14.1 Pre-launch Mode

(a) The cooler door must be verified latched.

(b) Cooler and scan cavity dust covers must remain in place for testing. (Note: Remove dust covers prior to launch).

(c) All command relays must be verified in prelaunch (off) configuration prior to putting the AVHRR/3 into launch configuration.

(d) Baseplate temperature limits, during all modes, is 10 to 30°C.

(e) The decontamination heater system for the radiant cooler is a thermostatically controlled system, originally designed to limit radiant cooler temperature to a maximum of 30°C. This is consistent with the requirement that the HgCdTe detectors be kept below 30°C.

Special precautions must therefore be taken when operating the cooler heater in testing these instruments to avoid detector temperatures in excess of 30°C because of a possible detector performance degradation or failure.

18.1.14.2 Launch Mode

(a) Verify that dust covers are removed prior to launch.

(b) Verify that the witness mirror is removed prior to launch.

(c) For launch the scan motor must be operating in the High Mode.

(d) See activiation sequence in Section 18.1.9.

Status Telemetry			
Patch Control		ON	
Motor Tlm		ON	
Elect Tlm		ON	
Tlm Lock		ON	
Channel_1		ENAB	
Channel_2		ENAB	
Channel_3A		ENAB	
Channel_3B		ENAB	
Channel_4		ENAB	
Channel_5		ENAB	
Channel Select		3A	
Earth Shield		DISA	
Cooler Heater		OFF	
Voltage Calib		OFF	
Motor Level		HIGH	
DET_4 Bias		0.8	
DET_5 Bias		0.8	
Temperatures			
NAVHMTRT	Baseplate	14.65	Deg. C
NAVHCLRT	Cooler	16.98	Deg. C
NAVHELET	Electronics	19.53	Deg. C
NAVHDT	A/D Converter	54.01	Deg. C
NAVHBB1T	Black Body_1	15.16	Deg. C
NAVHBB2T	Black Body_2	15.66	Deg. C
NAVHBB3T	Black Body_3A	14.49	Deg. C
NAVHBB3T	Black Body_3B	14.49	Deg. C
NAVHBB4T	Black Body_4	14.49	Deg. C
NAVRADT	Radiator	170	Deg. K
NAVHPCHE	Patch Extended	105	Deg. K
NAVHPCHT	Patch Fine	116.26	Deg. K
Other			
NAVHMTRI	Motor Current	151.20 MA	
NAVHELEI	Electr. Current	950 MA	
NAVHPCHP	Patch Power	0.00 MWA	
NAVHREFV	Ref. Voltage	6.20 Vol	

Figure 18.1-16. AVHRR/3 On-Orbit Nominal Performance.

18.1.14.3 Orbit Mode Constraints

The cooler door opening mechanism has a time-out device which automatically disables the solenoid after the door has opened. For safety, however, the cover release DISABLE command should be transmitted after positive indication has been received that the door is open.

18.2 HIGH RESOLUTION INFRARED RADIATION SOUNDER (HIRS/3)

18.2 HIGH RESOLUTION INFRARED RADIATION SOUNDER (HIRS/3)

18.2.1 FUNCTIONAL DESCRIPTION

The High Resolution Infrared Radiation Sounder (HIRS/3) is a discrete stepping, line-scan instrument designed to measure scene radiance in 20 spectral bands to permit the calculation of the vertical temperature profile from Earth's surface to about 40 km.

Multispectral data from one visible channel (0.69 micron), seven shortwave channels (3.7 to 4.6 micron) and twelve longwave channels (6.7 to 15 micron) are obtained from a single telescope and a rotating filter wheel containing twenty individual filters. An elliptical scan mirror provides cross-track scanning of 56 increments of 1.8°. The mirror steps rapidly (<35 msec), then holds at each position while the 20 filter segments are sampled. This action takes place each 0.1 second. The instantaneous FOV for each channel is approximately 1.4° in the visible and shortwave IR and 1.3° in the longwave IR band which, from an altitude of 833 kilometers, encompasses an area of 20.3 kilometers and 18.9 kilometers in diameter, respectively, at nadir on the Earth.

Three detectors are used to sense the radiation. A silicon photodiode at the instrument temperature (nominally 15°C) detects the visible energy. An Indium Antimonide detector and a Mercury Cadmium Telluride detector (mounted on a passive radiator and operating at 100K) sense the shortwave and longwave IR energy. The shortwave and visible optical paths have a common field stop, while the longwave path has an identical but separate field stop. Registration of the fields of view in all channels is largely determined by these stops with secondary effects from detector position.

IR Calibration of the HIRS/3 is provided by programmed views of two radiometric targets: a warm target mounted to the instrument base and a view of space. Data from these views provides sensitivity calibrations for each channel at 256 second intervals if commanded. Internally generated electronic signals provide calibration and stability monitoring of the amplifier and readout electronics.

Data from the instrument is multiplexed into a single data stream controlled by the TIP system of the spacecraft. Information from the radiometric channels and voltage telemetry are converted to 13-bit binary data. Radiometric information is processed to produce the maximum dynamic range such that instrument and digitizing noises are a small portion of the signal output. Each channel is characterized by a noise equivalent radiance (NEΔN) and a set of calibration data that may be used to derive atmospheric temperatures and probable errors.

The HIRS/3 instrument is a single package mounted on the Instrument Mounting Platform (IMP) of the TIROS spacecraft. Thermal blankets cover most outer surfaces other than that of the radiating panel and door area. The cooler radiating surface views space, emitting its heat to provide passive radiant cooling of the shortwave and longwave detectors to the stabilized 100K operating temperature. An Earth shield on the cooler door assembly insulates the door from Earth direction thermal input. The door is closed during launch and through the initial orbital outgas period (at least 14 days). After this outgas period, the door is opened permanently for cooling of the radiator. If there are indications of contaminate accumulation subsequently, a door-open outgas procedure can be performed by applying power to the heaters located on both stages of the radiant cooler. During this procedure, the cooler temperature rises to approximately 300K.

Figure 18.2-1 lists the system characteristics of the HIRS/3 Instrument. Figure 18.2-2 lists the spectral channel and sensitivity requirements for the HIRS/3. Figure 18.2-3 shows the Earth scan pattern and the angular locations of the calibration targets relative to Earth scan.

Optical Field of View	1.40° all channels
Included Energy	98% within 1.80°
Channel to Channel Registration	LW: <1.5% of 1.8° STEP SIZE SW: <1% of CH 19 FOV FWHM
Earth Scan Angle	±49.5° from Nadir
Earth Scan Steps	56 increments of 1.8°
Step and Swell Time	100 msec total
Retrace Steps	8
Total Scan plus Retrace Time	6.4 sec
Earth Swatch Coverage	1127 km
Earth Field Coverage	20.3 km (1.40° FOV) at NADIR
Radiometric Calibration	290K IWT Blackbody, and Space Look
Frequency of Rad. Cal.	256 sec, typical
Dwell Time at Cal Position	5.6 sec at IWT, 4.8 sec at space
Longwave Channels	12 (6.5 to 15 um)
Longwave Detector	Mercury Cadmium Telluride
Shortwave Channels	7 (3.7 to 4.6 um)
Shortwave Detector	Indium Antimonide
IR Detectors Temperature	100 K
Visible Channel	1 (0.69 um)
Visible Detector	Silicon
Visible Detector Temperature	Ambient
Signal Quantizing Levels	8192 (13 bit coding)
Electronic Calibration	32 equal levels each polarity
Frequency of Elect. Cal.	One level each scan line
Telescope Aperture	15.0 cm (5.9 in)
Filter Housing Temperature	300K (with baseplate at 286K)

Figure 18.2-1. HIRS/3 System Characteristics.

18.2.2 SYSTEM DESCRIPTION

18.2.2.1 Introduction

The HIRS/3 is a 20-channel scanning radiometric sounder utilizing a stepping mirror to accomplish cross-track scanning, directing the radiant energy from the Earth to a single, 6-inch diameter telescope assembly every tenth of a second. Collected energy is separated by a beamsplitter into longwave (above 6.5 μm) and shortwave (visible to 4.6μm), passed through field stops and through a rotating filter wheel to cooled detectors. In the shortwave path, a second beamsplitter separates the visible channel to a silicon detector.

The scan logic and control set the sequence of Earth viewing steps to provide a rapid scan mirror step motion to 56 fixed positions for spectral sampling of each respective air column. The filter wheel rotation is synchronized to this step and hold sequence, with approximately one-third of the wheel blank to accommodate each step interval and with the filters positioned for sampling only after the mirror has reached the hold position. Registration of the optical fields for each channel to a given column of air is dependent to some degree on spacecraft motion and on the alignment of two field stops, which can be adjusted to less than 1 percent of the field diameter.

Channel	Channel Frequency (cm-1)	µm	Half Power Bandwidth (cm-1)	Anticipated Max. Scene Temp (K)	NEΔN (Spec.)	NEΔN (Goal)
1	669	14.95	3	280	3.00	0.75
2	680	14.71	10	265	0.67	0.25
3	690	14.49	12	240	0.50	0.25
4	703	14.22	16	250	0.31	0.20
5	716	13.97	16	265	0.21	0.20
6	733	13.64	16	280	0.24	0.20
7	749	13.35	16	290	0.20	0.20
8	900	11.11	35	330	0.10	0.10
9	1,030	9.71	25	270	0.15	0.15
10	802	12.47	16	300	0.15	0.10
11	1,365	7.33	40	275	0.20	0.20
12	1,533	6.52	55	255	0.20	0.07
13	2,188	4.57	23	300	0.006	0.002
14	2,210	4.52	23	290	0.003	0.002
15	2,235	4.47	23	280	0.004	0.002
16	2,245	4.45	23	270	0.004	0.002
17	2,420	4.13	28	305	0.002	0.002
18	2,515	4.00	35	340	0.002	0.002
19	2,660	3.76	100	340	0.001	0.001
20	14,500	0.69	1,000	100% A	0.10% A	—

NEΔN units = $\frac{mW}{m\text{-}2 \cdot sr \cdot cm\text{-}1}$

Figure 18.2-2. HIRS/3 Spectral Requirements.

Radiant energy is focused on cooled detectors operating at a near optimum temperature of 100K. A Mercury Cadmium Telluride detector and an Indium Antimonide detector are mounted on a two-stage radiant cooler. This assembly is large enough to have reserve cooling capacity, permitting active thermal control to maintain the detectors fixed at 100K. A system of heating the patch and first stage is provided for initial outgassing and for decontamination later if it should be required.

Electronic circuits provide the functions of power conversion, command, telemetry, and signal processing. Amplification of the inherently weak signals from the detectors is done by low noise amplifiers. Radiant signals are fed through a base reference and memory processor, multiplexed, and A/D converted by a 13-bit range system. Once converted to a digital format, the data are again multiplexed with HIRS/3 "housekeeping" data and provided as a serial data stream at the digital A output. Data from HIRS/3 are held in memory until called by the TIP request signals and clocked out of the instrument by the TIP clock.

Repetitive inclusion of electronic calibration signals and the periodic command to scan to space and one internal blackbody provides the system with a complete set of data collection, calibration, and control that should permit reliable operation in orbit.

The characteristics of the instrument temperature sensors are shown in Figure 18.2-4, where it may be noted that calibration sources are measured very precisely. Figure 18.2-5 is a typical printout from the HIRS/3 test equipment during a system test.

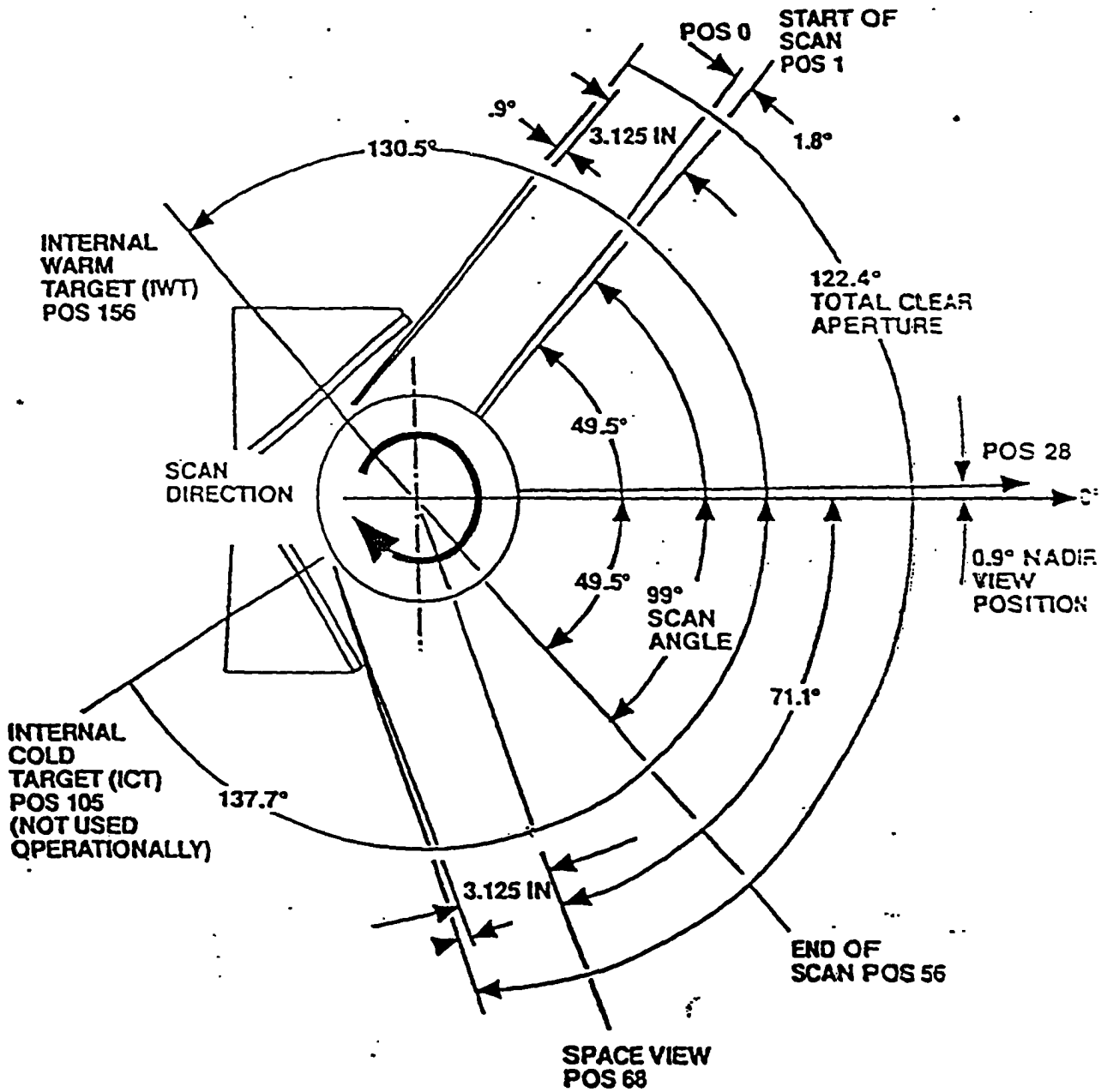

Figure 18.2-3. Scan Angles.

Channel Sensor Location	Subcomm Analog (K)	Digital "A" (K)	Approximate Digital "A" Sensitivity Counts/K	Nominal @ Operating Temperature
Patch - full range	90 - 320	90 - 320	53	@100 K
- expanded range		90 - 150	141	@100 K
Radiator	150 - 320	150 - 320	60	@170 K
F/W Motor	260 - 320	260 - 320	71	@300 K
Scan Motor	*260 - 320	260 - 320	78	@295 K
Baseplate	*260 - 320	260 - 320	78	@290 K
Electronics	260 - 320	260 - 320	78	@290 K
Primary Mirror		260 - 320	78	@290 K
Secondary Mirror		260 - 320	78	@290 K
Scan Mirror		260 - 320	78	@290 K
F/W Housing (HSG) - 1		273.15K - 333.15K		
F/W Housing (HSG) - 2		273.15K - 333.15K	152	@303 K
F/W Housing (HSG) - 3		273.15K - 333.15K		
F/W Housing (HSG) - 4		273.15K - 333.15K		
Internal Warm Target (IWT) - 1		273.15K - 333.15K		
Internal Warm Target (IWT) - 2		273.15K - 333.15K	152	@290 K
Internal Warm Target (IWT) - 3		273.15K - 333.15K		
Internal Warm Target (IWT) - 4		273.15K - 333.15K		
Internal Cold Target (ICT) - 1		243.15K - 303.15K		
Internal Cold Target (ICT) - 2		243.15K - 303.15K	152	@273 K
Internal Cold Target (ICT) - 3		243.15K - 303.15K		
Internal Cold Target (ICT) - 4		243.15K - 303.15K		
*Housekeeping TLM (full time temp. monitoring on switched +28 VDC TLM BUS)				

Figure 18.2-4. Sensor Temperature Ranges.

Instrument Temperatures				
Place	Counts	Volts	Temp. (°C)	Temp. (K)
IWT 1	-2,099.00	-2.564	14.40	287.64
IWT 2	-2,111.00	-25.780	14.40	287.55
IWT 3	-2,120.20	-2.589	14.35	287.50
IWT 4	-2,104.00	-2.570	14.43	287.58
ICT 1	-503.60	-0.615	-4.77	268.38
ICT 2	-354.80	-0.433	-3.88	269.27
ICT 3	-364.40	-0.445	-3.95	269.20
ICT 4	-436.00	-0.532	-4.37	268.78
F/W HSG 1	239.00	0.292	29.88	303.03
F/W HSG 2	313.00	0.382	30.26	303.41
F/W HSG 3	195.00	0.238	29.55	302.70
F/W HSG 4	308.00	0.376	30.28	303.43
PATCH EXP	-1,500.60	-1.833	-166.56	106.59
RAD COOLER	2,627.00	3.208	-102.43	170.72
SCAN MIRROR	1,898.00	2.318	13.35	286.50
PRI TELESCOPE	1,914.00	2.338	13.56	286.71
SEC TELESCOPE	2,044.00	2.496	15.23	288.38

Figure 18.2-5. Typical System Test Output.

Instrument Temperatures				
Place	Counts	Volts	Temp. (°C)	Temp. (K)
HIRS BASE	1,988.00	2.428	14.48	287.63
HIRS ELECT	2,209.00	2.698	17.31	290.48
HIRS PATCH	3,119.00	3.809	-166.53	100.24
SCAN MOTOR	2,137.00	2.610	16.44	289.59
FILT WH MOTOR	3,008.00	3.674	28.07	301.22
Instrument VOLTAGES AND CURRENT				
Place	Counts	Volts		
F/W Housing HTR	1,329.40	0.162	AMP	
ELECT CAL	-2.664.6	-3.254	VOLT	
ANALOG GRD	0.00	-2.589		
PATCH CONT PWR	1,295.00	8.085	MILLIWAT	
SCAN MOTOR	1,746.00	0.853	AMP	
FW MOTOR CNT	1,696.00	0.207	AMP	
+15 VDC	3,062.00	14.958	VOLT	
-15 VDC	-3064	-14.968	VOLT	
+7.5 VDC	3,038.00	7.421	VOLT	
-7.5 VDC	-3046	-7.44	VOLT	
+10 VDC	3,256.00	9.941	VOLT	
+5 VDC	3,017.00	4.913	VOLT	
ANALOG GRD	0.00			
ANALOG GRD	0.00			

Figure 18.2-5. Typical System Test Output (Continued).

18.2.2.2 Scan System Description

Figure 18.2-6 is a basic block diagram of the scan system. The heart of the scan system is a stepper motor with 200 steps per rotation. Assembled to the shaft of the stepper motor are (1) a scan mirror mounted with the mirror surface plane at 45° with respect to the axis of the motor shaft, (2) a DC torque motor, (3) a DC tachometer, (4) a shaft position encoder, and (5) a two contact slip ring assembly. The DC tachometer is used to derive rate information which is used to control a DC torque motor to aid stopping of the scan rotation as the scan settles into a track position or into a step position.

The drive control signals for the stepper motor are generated by a step generator which has input control features for retrotorque control, step/slew control and rotational direction control (up/down). Output from a scan regulator with power level control is applied to the motor driver to provide stepping torque levels as required.

Scan Control logics utilize timing signals and position commands in conjunction with position information derived from a position encoder to monitor and control performance of the system. Connections to a thermal sensor on the scan mirror are provided via two leads from the mirror through the hollow motor shaft to a slip ring assembly at the opposite end of the shaft.

Section 18.2.10 contains a detailed functional description of the HIRS/3 scan system as it performs in the different operational modes.

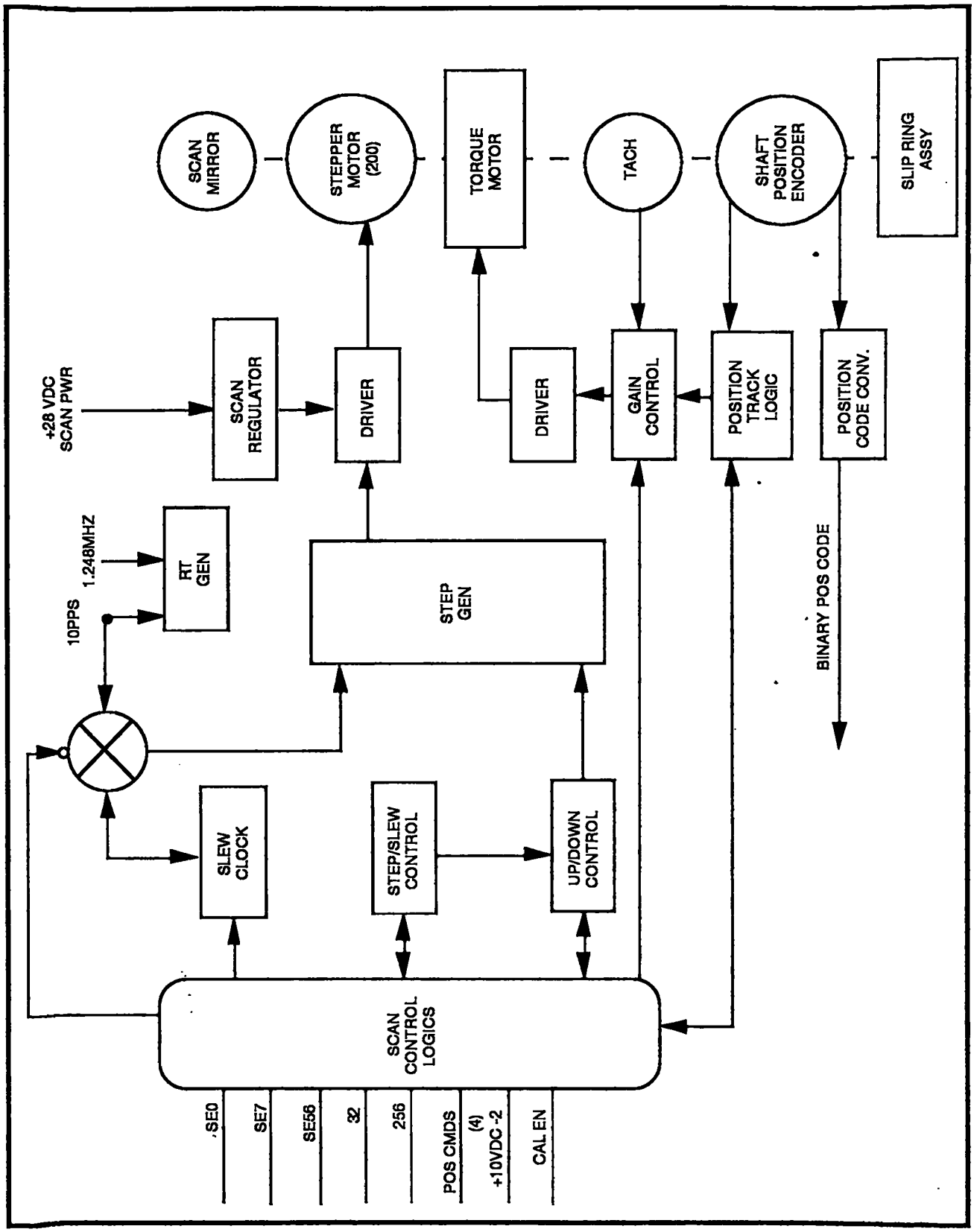

Figure 18.2-6. Scan System Basic Block Diagram.

18.2.3 ELECTRICAL AND MECHANICAL BLOCK DIAGRAMS

The HIRS electric block diagram is displayed in Figure 18.2-7 while Figure 18.2-8 shows the mechanical configuration.

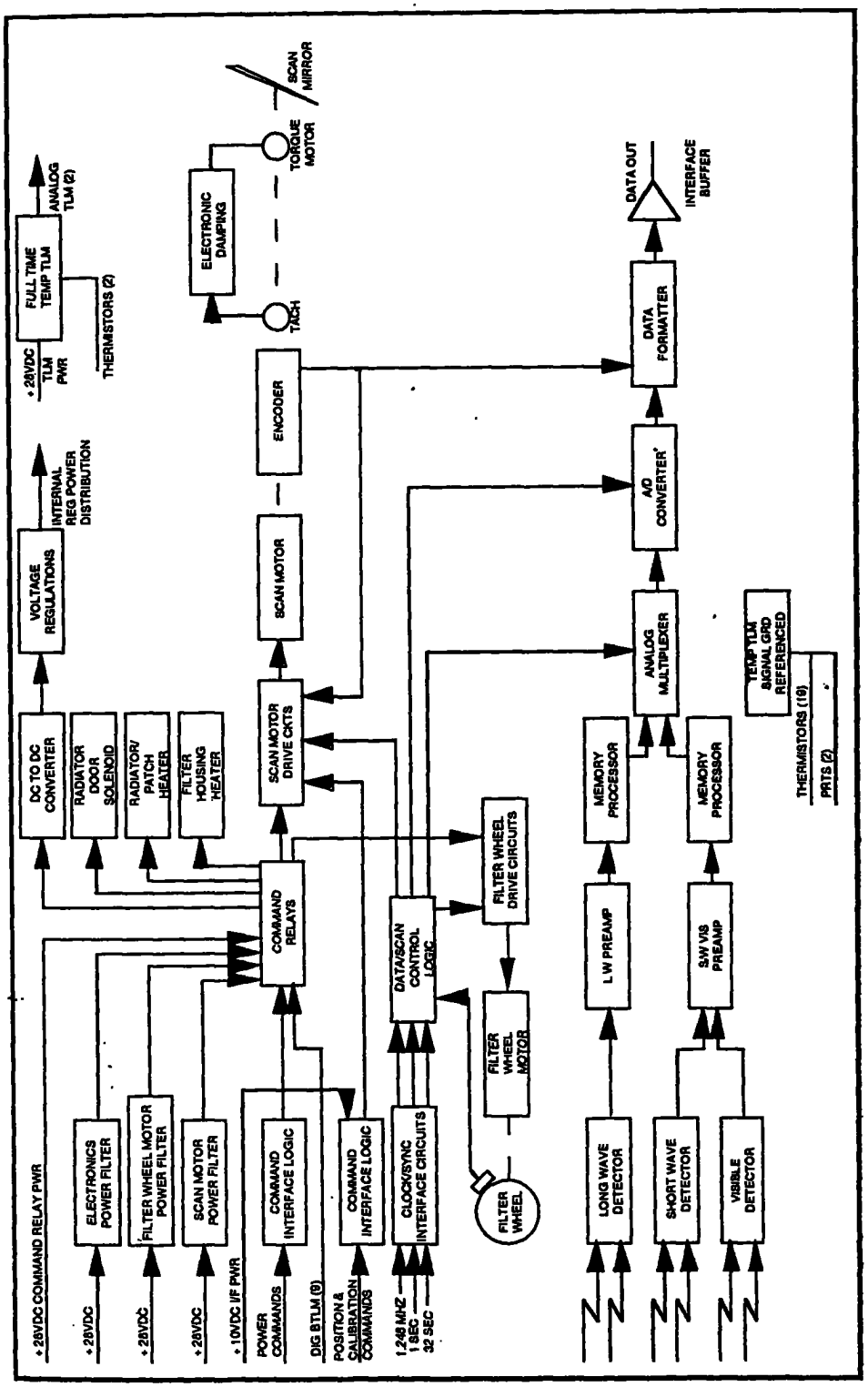

Figure 18.2-7. HIRS/3 System Block Diagram.

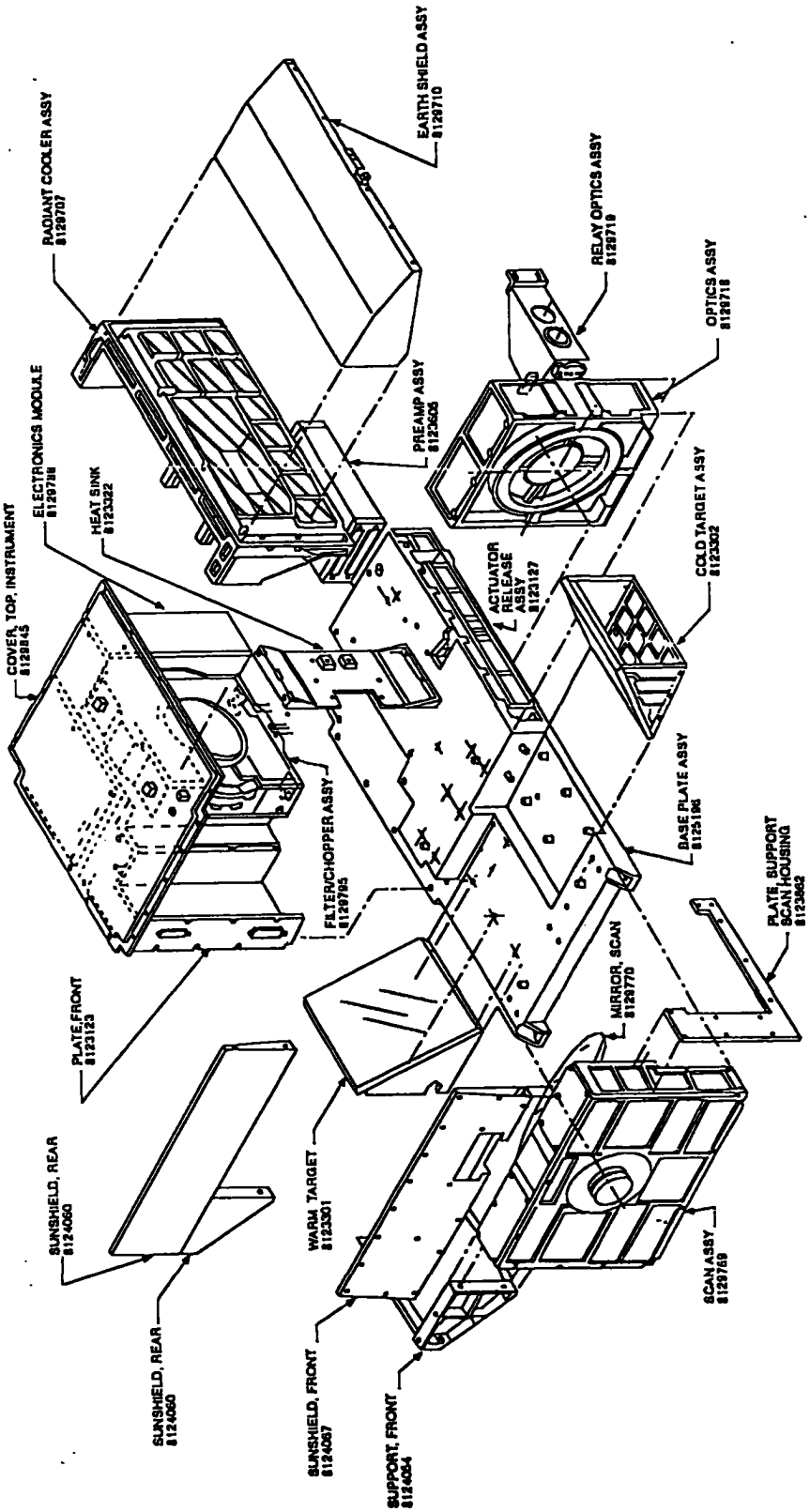

Figure 18.2-8. HIRS/3 Exploded View.

18.2.4 INTERFACE TIMING

The HIRS/3 system is controlled by the spacecraft 1.248 MHz clock signal, the 32-second major frame signal and a 1 Hz clock signal (minor frame synch signal). From these inputs, HIRS/3 generates the timing necessary to control the:

- Filter wheel rotation
- Scan mirror drive
- Data format and storage
- Power converter frequency
- Signal collection and processing

One of the features of the HIRS/3 timing system is that the scan system and filter wheel systems have independent timing circuitry for their individual use when the instrument electronics are off. When electronics are turned on, both systems are locked to the spacecraft clock system.

The filter wheel rotation starts independent of the clock system; when the electronics are turned on, the filter wheel is controlled such that its rotation rate is synchronous with the 0.1 second timing of the data system and the wheel position is brought into phase with the minor frame synch signal to assure that the data collection is coincident with the data processing electronics. During each individual radiometric channel collection interval, the start and stop of the collection is independent of the clock system being controlled by a timing disk on the filter wheel. This eliminates any disturbance of signal timing by a slight variation in wheel rotation during system operation.

The data from the HIRS/3 system are called from a storage register by the TIP interrogation signal (A_1 Select). The TIP also provides an 8320 Hz clock to the instrument for clocking out the Digital A data (C_1 clock pulse). These pulses are defined in the GIIS.

In addition to the clock pulses, there is a calibration start pulse (CSP) occurring every 256 seconds that activates a sequence of scans that provide radiometric calibration of the instrument. When the Calibration Disable command is in effect, this calibration pulse will be ignored and the instrument will continue its normal scan sequence.

The major frame pulse (MFP) is used to establish a reference for the start of scan sequence and to synchronize the retrace telemetry data to the TIP major frame so that electronic calibration and telemetry data go into known data slots.

18.2.5 INSTRUMENT TELEMETRY

The output data signals supplied by the instrument to the spacecraft fall into three categories -- Analog Telemetry, Digital B Telemetry, and Digital A (Radiometric) Data. The specific signals supplied by the HIRS/3 are detailed in the following paragraphs.

18.2.5.1 Analog Telemetry

The analog telemetry is available at the instrument interface at all times. Three different subcoms (32, 16, and 1 second) generated by the TIP are used to sample all spacecraft analog

telemetry. Sixteen words from the 16 and 32 second subcoms are dedicated to HIRS/3 analog telemetry.

18.2.5.1.1 Analog Housekeeping Telemetry

Selected temperature sensors and voltages are provided for analog telemetry. Fourteen positions are brought to the Analog TLM connector. Two additional full time telemetry outputs are also brought to this counter even if the instrument is off. These points are sampled at either 16 or 32 second intervals as shown in Figure 18.2-9.

No	Telemetry Point Name	Sample Rate	Channel No/FF No*	Range	Resolution
1	Radiator Temperature	32	6	150-320K	0.6K
2	Base Plate Temperature (Powered by +28V Analog Bus)	32	14	260-320K	0.7K
3	Electronics Temperature	32	22	260-320K	0.2K
4	Patch Temperature	32	231	90-320K	0.7K
5	Filter Housing Controller Current	16	285 /9 374	0 to 330 mA	2 mA
6	Scan Motor Temperature (Powered by +28V Analog Bus)	32	239	260-320K	0.3K
7	Filter Wheel Motor Temp.	32	246	260-320K	0.2K
8	+5 VDC Monitor	16	301/82	5 ± 0.2V	.04V
9	+10V VDC TLM/DC/DC Conv.	16	334/85	10 ± 0.2V	0.13V
10	+7.5 VDC TLM DC/DC Conv.	16	342/86	7.5 ± 0.5V	.08V
11	-7.5 VDC TLM DC/DC Conv.	16	359/141	-7.5 ± 0.5V	.08V
12	+15 VDC Monitor	16	366/88	15 ± 0.2V	.03V
13	-15 VDC Monitor	16	271/84	-15 ± 0.2V	.03V
14	Filter Wheel Motor Current	16	261/29 262	100 to 300 mA	2 mA
15	Scan Motor Current	32	245	0.65 to 1.0A	.01A
16	Patch Controller Power	32	255	0 to 80 mW	.2w

Figure 18.2-9. HIRS/3 Analog Telemetry

18.2.5.1.2 Full Time Analog Telemetry

A switched +28V bus is provided to the HIRS/3 for measurement of two temperature sensors even when the instrument is off. These two sensors are separate from those connected to the instrument power system. A baseplate temperature sensor and a scan motor sensor are considered capable of defining the general system temperature under instrument OFF conditions.

18.2.5.2 Digital "B" Telemetry

The Digital B one-bit status telemetry is available at the instrument interface at all times. The 3.2 second subcom generated by the TIP samples each Digital B Telemetry Point once every 3.2 seconds. In the HIRS/3 instrument, the Digital B outputs are discrete bilevel signals of 0 or 5V nominal relating to a Logic 1 or 0. The functions monitored, channel number, and the state relative to the output level are shown in Figure 18.2-10. The Digital B data are available at any time that instrument power is ON.

No	Telemetry Point Name	Dig. "B" Channel No	State	
			Logic "1" (0 Volts)	Logic "0" (+5 Volts)
1	Instrument Power	22	On	Off
2	Electronics Power	30	On	Off
3	Filter Motor Power	54	On	Off
4	Scan Motor Power	61	On	Off
5	Cooler Heater	68	On	Off
6	Filter Housing Heater	95	On	Off
7	Cooler Door Release	118	Enabled	Disabled
8	Cooler Window Heater	125	Off	On
9	Go to NADIR Position	128	Yes (Initiated)	No
10	Calibration Sequence	150	Enabled	Disabled
11	Cooler Door Closed	157	No	Yes
12	Cooler Door Fully Open	165	No	Yes
13	Filter Motor Power Level	189	High	Normal
14	Patch Temperature Controller	215	On	Off

Figure 18.2-10. HIRS/3 Digital B Telemetry

18.2.5.3 Digital "A" Telemetry

The data from the HIRS/3 are provided to the TIP system from a storage register. The TIP clock pulse (C_1) and Data Select pulses determine the time at which data are called out. The TIP formatter calls out groups of 8-bit words in a sequence that multiplexes HIRS/3 data with that of other instruments. Because of the large quantity of HIRS/3 data to be transmitted and the use of 13-bit decoding of radiometric data, it was not possible to format the HIRS/3 data into neat 8-bit segments. The HIRS/3 data are therefore provided as a continuous stream with 13-bit word lengths. During any minor frame, there are 288 bits of data; each bit is identified as to its purpose.

A full set of HIRS/3 operational data, including command status monitors, housekeeping information and radiance data of the 20 channels, is contained in the Digital A output. The HIRS/3 data repeats every 6.4 seconds as described below. The 6.4 second period contains 64 elements. The Earth scan sequence and the calibration cycle are shown in Figure 18.2-11.

1) Element Definition

Digital A output is divided into "elements" of 288 bits. An element is phased to fit into a TIP minor frame as described above.

2) Element Formats

Sixty-four elements make up each scan. The formats for the elements repeat every 6.4 seconds and correspond to the particular parts of the scan. Element numbers 0-55 are Earth scan data. Scan element 0 describes the data at the time of viewing the first Earth scan position. Scan element 55 designates the last Earth scan position. Scan elements 56-63 occur during retrace during normal Earth scanning. The same element number designations continue when the scan is commanded to a calibration target. Normally the mirror motion to the warm calibration target takes place during the normal retrace interval. In the case of slew to the space look position, the motion occurs during scan elements 0 to 7.

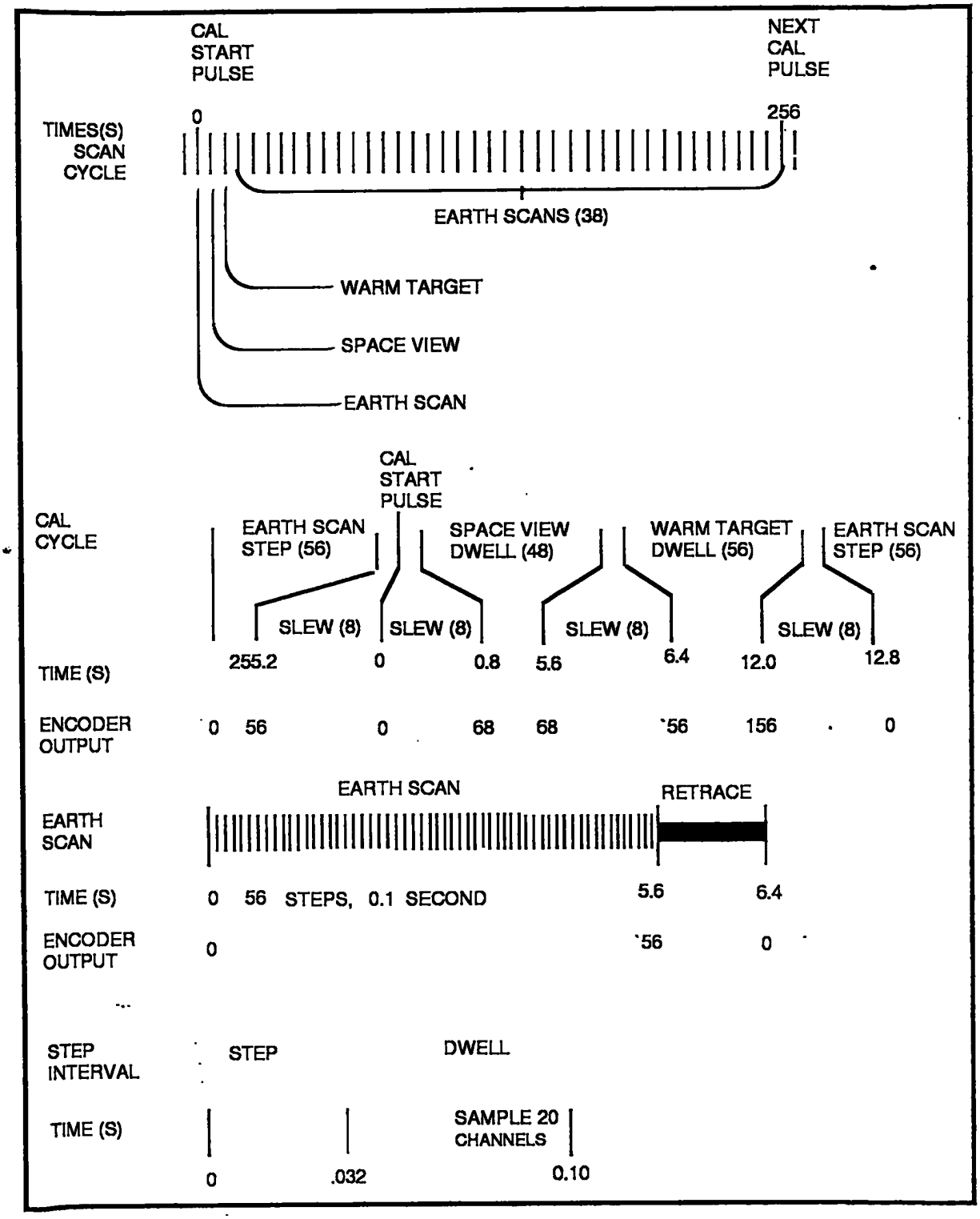

Figure 18.2-11. HIRS/3 Scan Step Sequence with Calibration Cycle.

Data reduction must take this into account as required. The elements are divided as follows:

(a) Bits 1-26

Two 13 bit words have the same function in all 64 elements. The function assembled in these words are as follows:

Word 1	Function	Range (Decimal)
1 - 8	Scan Encoder Position	0 to 199
9 - 13	Electronic Cal Level Indicator*	0 to 31

Word 2	Function	Range (Decimal)
1 - 6	Channel 1 Period Monitor	0 to 63
7 - 12	Element Number	0 to 63
13	Filter Sync Designator	N.A.

(b) Bits 27-286

This group of bits is divided into 20 13-bit words (20 Ch x 13 Bits). For elements 0-55, these are the Radiant Signal Output. The word functions are dependent on element number. These functions are given in Figure 18.2-12. Except for the two status words in element 63, all words are quantity where bit 1 is the sign bit and bits 2 through 13 are amplitude (0 to 4095). Bit 2 is the most significant bit (MSB) and bit 13 is the least significant bit (LSB) of the quantity. The sign bit is:

logic "1"	+ (positive)
logic "0"	- (negative)

The HIRS/3 instrument serial number is preset for each instrument in element 63, bits 42-44. The protoflight has the designation 001; the flight models will be designated 002 on up.

(c) Bits 287 & 288

In the same manner as for bits 1 through 26, these two bits have the same function in all 64 elements. In order to aid determination of times when data should not be used, we have included a Valid Data Bit into the data stream. This bit is a "1" when all conditions are normal and data may be considered good. It will be a "0" when the scan system is in a slew mode or when the filter wheel is not synchronized to the timing system.

Bit 287 Valid Data Bit

logic "1"	Valid Data
logic "0"	Ignore Radiometric Data

Element No	Bit No	Function	Remarks
0-55	27- 39	Radiometric Channel No 1 (669 cm-1)	0 counts radiance from scene equal radiance from filter wheel (FW). Minus (-) values are colder than FW. Plus (+) values are warmer than FW.
	40- 52	Radiometric Channel No 17 (2360 cm-1)	0 counts offset from FW radiance. Plus and minus are hot and cooler than offset.
	53-65	Radiometric Channel No 2 (680 cm-1)	No offset.
	66-78	Radiometric Channel No 3 (690 cm-1)	No offset.
	79-91	Radiometric Channel No 13 (2190 cm-1)	Offset.
	92-104	Radiometric Channel No 4 (703 cm-1)	No offset.
	105-117	Radiometric Channel No 18 (2515 cm-1)	Offset.
	118-130	Radiometric Channel No 11 (1365 cm-1)	No offset.
	131-145	Radiometric Channel No 19 (2660 cm-1)	Offset.
	144-156	Radiometric Channel No 7 (749 cm-1)	No offset.
	157-169	Radiometric Channel No 8 (900 cm-1)	No offset.
	170-182	Radiometric Channel No 20 Visible (14,500 cm-1 680 nm)	Black is minus. White is plus.
	183-195	Radiometric Channel No 10 (1225 cm-1)	No offset
	196-208	Radiometric Channel No 14 (2210 cm-1)	Offset.
	209-221	Radiometric Channel No 6 (733 cm-1)	No offset.
	222-234	Radiometric Channel No 5 (716 cm-1)	No offset.
	235-247	Radiometric Channel No 15 (2240 cm-1)	Offset.
	248-260	Radiometric Channel No 12 (1488 cm-1)	No offset.
	261-273	Radiometric Channel No 16 (2270 cm-1)	Offset.
	274-286	Radiometric Channel No 9 (1030 cm-1)	Offset.

Figure 18.2-12. Digital A Status Telemetry

Element No	Bit No	Function	Remarks
56	27-286	Positive Electronics Calibration. Applied to 20 radiometric channels.	Calibration level advances one of the 32 equal level steps on successive scans. The off-set and gain of each channel will influence the amplitude of the signal. The calibration level applied to the electronics by bits 9 through 13 of the Element.
57	27-286	Negative Electronics Calibartion applied to 20 radiometric channels	
58	27- 91	Internal Warm Target Temperature Sensor #1	Value repeated 5 times. Range 273 to 333°K.
	92-156	Temperature Sensor #2	
	157-221	Temperature Sensor #3	
	222-286	Temperature Sensor #4	
59	27- 91	To be determined	
	92-156	To be determined	
	157-221	To be determined	
	222-286	To be determined	
60	27- 91	Filter Wheel Housing Temperature Sensor #1	Value repeated 5 times. Range 273 to 333°K.
	92-156	Temperature Sensor #2	
	157-221	Temperature Sensor #3	
	222-286	Temperature Sensor #4	
61	27- 91	Patch Temperature Expanded Scale	Value repeated 5 times. Range 90 to 150°K.
	92-156	First Stage Radiator Temperature Sensor	Value repeated 5 times. Range 150 to 320°K.
	157-221	Filter Wheel Housing Heater Current	Value repeated 5 times. Range 0 to 500 ma.
	222-286	Electronic Calibration Digital to Analog Converter	Value repeated 5 times. Range volts 0 to 4V.
62	27- 39	Scan Mirror Temperature	Range 260 to 320°K
	40- 52	Primary Telescope Temperature	Range 260 to 320°K
	53- 65	Secondary Telescope Temperature	Range 260 to 320°K
	66- 78	HIRS/3 Baseplate Temperature	Range 260 to 320°K
	79- 91	HIRS/3 Electronics Temperature	Range 260 to 320°K
	92-104	Patch Temperature-Full Range	Range 90 to 320°K
	105-117	Scan Motor Temperature	Range 260 to 320°K
	118-130	Filter Wheel Motor Temperature	Range 260 to 320°K
	131-143	Cooler Housing Temperature	Range 260 to 320°K
	144-156	Patch Control Power	Range 0 to 80 mw
	157-169	Scan Motor Current	Range 0.65 to 1.0
	170-182	Filter Motor Current	Range 100 to 300 mA
	183-195	+15 VDC	Range 15 ± 0.2V
	196-208	-15 VDC	Range -15 ± 0.2V
	209-221	+7.5 VDC	Range +7.5 ± 0.05V
	222-234	-7.5 VDC	Range -7.5 ± 0.05V
	235-247	+10 VDC	Range 10 ± 0.2V
	248-260	+5 VDC	Range 5 ± 0.2V

Figure 18.2-12. Digital A Status Telemetry (Continued).

Element No	Bit No	Function	Remarks
62 (Cont)	261-273	Analog Ground	Range ± 1 count
	274-286	Analog Ground	Range ± 1 count
63	27- 39	Line Counter (Gives the number of lines from the last auto calibration sequence)	0 to 8191 (There is no sign bit used in the line counter). Reset to 0 count is only when counter overflows.
	40- 52	First Status Word	First 5 bits are instrument serial number (no sign bit). The remaining bits indicate status as shown in Figure 18.2-13.
	53- 65	2nd Status Word	First 5 bits are zero fill. The remaining bits indiate status as shown in Figure 18.2-13.
	66- 78	Data Verification Binary Code	Binary Code is: (1,1,1,1,1,0,0,1,0,0,0,1,1) Equivalent Base 10 value + 3875
	79- 91		Base 10 value + 1443
	92-104		-1,522
	105-117		-1,882
	118-130		-1,631
	131-143		-1,141
	144-156		1,125
	157-169		3,655
	170-182		-2,886
	183-195		-3,044
	196-208		-3,764
	209-221		-3,262
	222-234		-2,283
	235-247		-2,251
	248-260		3,214
	261-273		1,676
	274-286		1,992

Figure 18.2-12. Digital A Status Telemetry (Continued).

Minor Word Parity Check is a bit inserted to make the total word odd. This permits automatic checking for data losses in the transmission of the data from the HIRS/3.

Bit 288 Odd bit parity

3) Function Descriptions

Scan Encoder Position - Encoder position is the sensed position of the scan mirror in 1.8° increments. The scan positions are described later, but it may be noted that encoder position "1" occurs at the first Earth scan position, hence will be the encoder position noted during element "0".

Electronic Cal Level Indicator - Electronic calibration level advances from 0 to 31, defining the step level measured in each radiometric channel during elements 56 and 57. Since both a positive and negative calibration is made at the end of each scan line, the level applies to both. The step level starts at 0 on the first scan after a calibration start pulse and continues repetitively after that and even when calibration is disabled.

Channel 1 Period Monitor - Measures the variation in time interval of a segment of the filter wheel on each rotation. The reading measures 1.248 MHz clock intervals of that segment; hence, it defines velocity variations to a granularity of 0.8 microseconds. This is a diagnostic output and is not used in system data processing or evaluation.

Element Number - The number of this data group. It advances from 0 to 63 with element 0 related to the first Earth scan position. The element number repeats regardless of scan position or mode.

Filter Sync Designator - Filter Sync is a "1" when the filter wheel is in synchronism with the timing system. This is diagnostic data not normally used in data collection or processing.

4) Digital A Status Telemetry

The last element of each scan, element 63, contains two status words. Bits 45-52 and 58-65 of element 63 are command status bits. Logic state definition is shown in Figure 18.2-13.

Bit No.	Function	Remarks
	First Status Word	
45	Instrument ON/OFF	ON = 1
46	Scan Motor ON/OFF	ON = 0
47	Filter Wheel ON/OFF	ON = 0
48	Electronics ON/OFF	ON = 1
49	Cooler Heat ON/OFF	ON = 0
50	Internal Warm Tgt. Pos	True = 0
51	Internal Cold Tgt. Pos	True = 0
52	Space Pos.	True = 0
	Second Status Word	
58	NADIR Pos.	True = 0
59	Calibration Enable/Disable	Enabled = 0
60	Cooler Door Release Enable/Disable	Enabled = 0
61	Cooler Door Open	YES = 1
62	Cooler Door Closed	YES = 1
63	Filter Housing Heat ON/OFF	ON = 0
64	Patch Temperature Control ON/OFF	ON = 0
65	Filter Motor Power HIGH	Normal = 1

Figure 18.2-13. Digital A Status Telemetry.

18.2.6 COMMANDS

18.2.6.1 Command Mnemonics and Descriptions

The commands to the HIRS/3 instrument are all pulse commands which activate relays or directly control a circuit element. The commands are listed in Figure 18.2-14. The pulse command start from a reset condition at logic level "1" (0 volts). The pulse is at logic level "0" (10 volts) for a period of 0.5 to 1.5 second.

No.	Command	MNEMONIC	Description
1.	Instrument ON	[H3PON]	This command connects both the +28V main bus and pulse bus to HIRS/3 and energizes the telemetry DC/DC converter, permitting subcomm analog temperature monitoring in the absence of all other power.
2.	Instrument OFF	[H3POF]	Disconnects all +28V busses from the instrument except +28V bus for commands and full time +28V telemetry bus. It returns all other commands to OFF or disabled condition except as noted (see Mission Modes Sec.)
3.	Scan Motor ON	[H3SMN]	Provides power to the scan motor. When used with Electronics OFF, it drives scan motor in a continuous stepping mode. This feature is used during launch to prevent damage to motor bearings. When used with Electronics ON, the motor will step and retrace in the normal mode at synchronous speed.
4.	Scan Motor OFF	[H3SMF]	Command scan motor OFF.
5.	Filter Wheel Motor ON	[H3FWN]	Provides power to the Filter Wheel drive motor. Permits filter wheel operation at either (1) near synchronous speed when "Electronics OFF" command executed, or (2) at normal synchronous speed with "Electronics ON" command executed.
6.	Filter Wheel Motor OFF	[H3FWF]	Commands filter wheel motor OFF.
7.	Electronics ON	[H3ELN]	Provides power to all electronic and data handling systems not provided by the "Instrument ON" command H3PON.
8.	Electronics OFF	[H3ELF]	Commands electronics power OFF.
9.	Cooler Heat ON	[H3CHN]	Provides power to first and second stage cooler heaters. Used during orbital decontamination.
10.	Cooler Heat OFF	[H3CHF]	Commands cooler heater power OFF.
11.	Internal Warm Target (IWT) Position	[H3IWT]	When the instrument is in the calibration enable mode, this command causes the scan mirror to move to the internal warm target (IWT) after completion of the current scan line and retrace to step zero. The scan mirror will remain at the IWT until this command is disabled by Position Disable.
12.	Internal Cold Target (ICT) Position	[H3ICT]	Command causes the scan mirror to move to the internal cold target (ICT). After completion of the current scan line and retrace to step zero, the scan mirror will remain at the ICT until this command is disabled by Position Disable.
13.	Space Position	[H3SPA]	When the instrument is in the calibration enable mode, this command causes the scan mirror to move to space after completion of the current scan line and retrace to step zero. The scan mirror will remain at space until this command is disabled by Position Disable.
14.	Nadir Position	[H3NAD]	When the instrument is in the calibration enable mode, this command causes the scan mirror to move to nadir after completion of the current scan line and retrace to step zero. The scan mirror will remain at nadir until this command is disabled by Position Disable.
15.	Position Disable	[H3PDA]	Disables the IWT, ICT, Space and Nadir position commands and returns scan mirror to scan step 0. Scan will resume upon receipt of next line sync (first element) pulse.
16.	Calibration Enable	[H3CLE]	Enables the radiometric calibration control logic. When sent, the scanner will continue line scanning until the next major frame sync pulse. It will then execute a normal calibration sequence. Subsequent calibration sequence will be executed upon receipt of a Calibration Start Pulse (as described in Section 18.2.4) coincident with major frame sync.

Figure 18.2-14. HIRS/3 Commands.

No.	Command	MNEMONIC	Description
17.	Calibration Disable	[H3CLD]	Disable the instrument calibration mode. In this mode, the instrument will ignore the spacecraft calibration start pulse.
18.	Cover Release Enable	[H3CRE]	Provides power to the Earth shield release solenoid drive circuit only after Instrument Power is ON.
19.	Cover Release Disable	[H3CRD]	Reset the Cover Release Enable relay to the OFF position.
The following commands will not be affected by the instrument off command.			
20.	Cooler Cover Deploy	[H3CCD]	Commands opening of cooler door by applying a two second pulse to the cover release solenoid. Operates only if Instrument Power ON and Cover Release Enable commands are sent.
21.	Filter Housing Heat ON	[H3FHN]	Provides power to filter housing heaters and automatic temperature control circuitry.
22.	Filter Housing Heat OFF	[H3FHF]	Commands filter housing heat OFF.
23.	Patch Temp. Control ON	[H3PCN]	Provides power to patch temperature control heater to control patch at approximately 100K.
24.	Patch Temp. Control OFF	[H3PCF]	Commands patch temp. heater OFF permitting patch to seek equilibrium temperature.
25.	Filter Motor Normal Power	[H3FMN]	Applies preset power level to filter wheel motor for normal operation.
26.	Filter Motor High Power	[H3FMH]	Applies maximum power to Filter wheel motor for cold operation and end of life conditions.

Figure 18.2-14. HIRS/3 Commands (Continued).

One feature of the HIRS/3 instrument is the automatic reset of many of the commands when Instrument OFF is received. Commands 1-19 will reset to the OFF condition at that time. This ensures that when the instrument is turned on again that the system will be in a defined condition, assuring a low power condition and providing a basis for a consistent turn-on sequence. There is no sequence of commands which will damage the HIRS/3.

18.2.6.2 Safe State Definition

Safe state is defined by the following conditions:

- HIRS3 Power OFF
- HIRS3 Scan Motor OFF
- HIRS3 Filter Wheel OFF
- HIRS3 Electronics OFF
- HIRS3 Cooler Heat OFF
- HIRS3 Calibration Disable
- HIRS3 Cooler Cover Release Disable
- HIRS3 Filter Heat OFF

- HIRS3 Patch Control OFF
- HIRS3 Filter Motor Normal.

18.2.6.3 Power Down Mnemonic Sequence

18.2.6.3.1 Normal Power Down

- [H3CLE] Calibrate Enable
- [H3IWT] Internal Warm Target Position

  Wait 30 seconds for mirror to stop

- [H3SMF] Scan Motor OFF
- [H3ELF] Electronics OFF
- [H3FHF] Filter Housing Heat OFF
- [H3CHF] Cooler Heat OFF
- [H3PCF] Patch Temperature Control OFF
- [H3FWF] Filter Wheel Motor OFF
- [H3POF] Instrument OFF

18.2.6.3.2 Emergency Power Down

In the event of a suspected imminent rotational failure of the Scan System, see Section 18.2.10.3 - Commanded Position Mode.

- [H3IWT] Internal Warm Target Position

  Wait 30 seconds for mirror to stop

- [H3SMF] Scan Motor OFF
- [H3ELF] Electronics OFF
- [H3FWF] Filter Wheel Motor OFF
- [H3POF] Instrument OFF

18.2.6.4 Power Up Mnemonic Sequence

18.2.6.4.1 Routine Power Up

The normal command sequence is done in two stages. The first puts the instrument in the launch mode. This mode may be held indefinitely. The second mode is operating mode. The commands are as follows:

a) Launch Mode

- [H3POF] Instrument OFF
- [H3PON] Instrument ON
- [H3SMN] Scan Motor ON
- [H3FMN] Filter Motor Normal Power
- [H3FWN] Filter Wheel Motor ON

b) Operating Mode

- [H3ELN] Electronics ON
- [H3CHF] Cooler Heater OFF
- [H3FHN] Filter Wheel Heater ON
- [H3PCN] Patch Temp Control ON
- [H3FMN] Filter Motor Normal Power
- [H3CLE] Calibration Enable

Two other command sequences will be required for operating the HIRS/3 instrument. They are the outgassing heater operation and the cooler door deployment. Both of these sequences start with the instrument in the launch mode and are described in Section 18.2.9.1 - Activation Sequence.

18.2.6.4.2 Power Up from Safe State

This command sequence is identical to that for a routine power up: see section 18.2.6.4.1.

18.2.7 MIRP PROCESSING

The HIRS/3 does not use the spacecraft MIRP.

18.2.8 POWER INPUT AND PROFILE

The HIRS/3 instrument is powered from the spacecraft +28 volt main bus, a +28 volt pulse load bus, a switch +28 volt analog temperature telemetry bus, and a +10 volt interface bus. A separate input provides power to the base heater from the spacecraft Temperature Control Electronics (TCE) system.

All power systems are brought to the HIRS/3 system on separate leads. The power sources remain separate within the instrument with returns maintained separate for each supply. A single chassis ground is brought to the output connector on an isolated pin. Signal and power grounds remain separate. A capacitive connection was made between signal ground and the chassis at the radiant cooler to reduce noise in the longwave preamp.

The distribution of power is shown in Figure 18.2-15. It may be noted that the Instrument ON command is the primary control of power to the system. With this power switched ON, there is power only to the telemetry DC-DC converter; this provides output from analog temperature telemetry as well as digital B telemetry even when other instrument functions are NOT turned ON.

With Instrument Power ON, any combination of subsystem power may be applied. This permits the operation of the scan motor, filter motor, filter housing heater, and door deployment independent of system electronics such that combinations of functions may be selected for launch, decontamination, standby, or other operating conditions.

The power required for system operation is obtained from all the above sources. In normal operating (mission) mode, the average power demand is shown below.

+28V Main	8.1 W
+28V Pulse, Scan	8.2
+28V Pulse, F.W.	6.4
+10V Interface	0.1
+28V Telemetry	0.03
+28V Command	0.0
Base Heater	0.0
Total Average	22.8 W

Peak current demands occur periodically during the scan cycle for short durations. At that time, the power demand may reach 27.5 watts.

During system outgas, an additional 28 watts for HIRS/3 may be required to maintain the cooler components at their prescribed temperatures. When the cooler door remains closed at initial outgas, this peak load is intermittent, adding only 5 watts to the average load.

18.2.9 ACTIVATION AND EVALUATION (A&E) PROCEDURES AND TIMELINE

The activation sequence for the HIRS/3 instrument (FM-1I through -3I) with its 30°C radiant cooler decontamination heater is as follows:

(a) Commands Prior to Launch - Instrument ON (H3PON), Scan Motor ON (H3SMN), Filter Motor Normal Power (H3FMN), and Filter Wheel Motor ON (H3FWN). Note: The stored command "on/off" for the outgassing/cooler heater may remain unchanged as a precautionary measure against accidental HIRS/3 cooler door deployment.

(b) Revolution 1 Commands - Cooler Heater ON (H3CHN). The cooler heater shall be turned on as soon as practical after the spacecraft is in orbit for outgassing.

(c) Revolution 216 Commands - The following commands will not be sent for a minimum of fourteen (14) days in orbit. Cooler Door Release Enable (H3CRE), command spacecraft 28 volt bus current, analog telemetry channel 296, into 1 second dwell modes prior to Cooler Door Deploy (H3CCD); Cooler Door Release Disable (H3CRD), command spacecraft 28 volt bus current 1 second dwell mode off; Cooler Heater OFF (H3CHF); and Patch Temperature Controller ON (H3PCN).

(d) After a minimum delay of 24 hours for detectors to cool, Send Electronics ON (H3ELN) command to excite the detector.

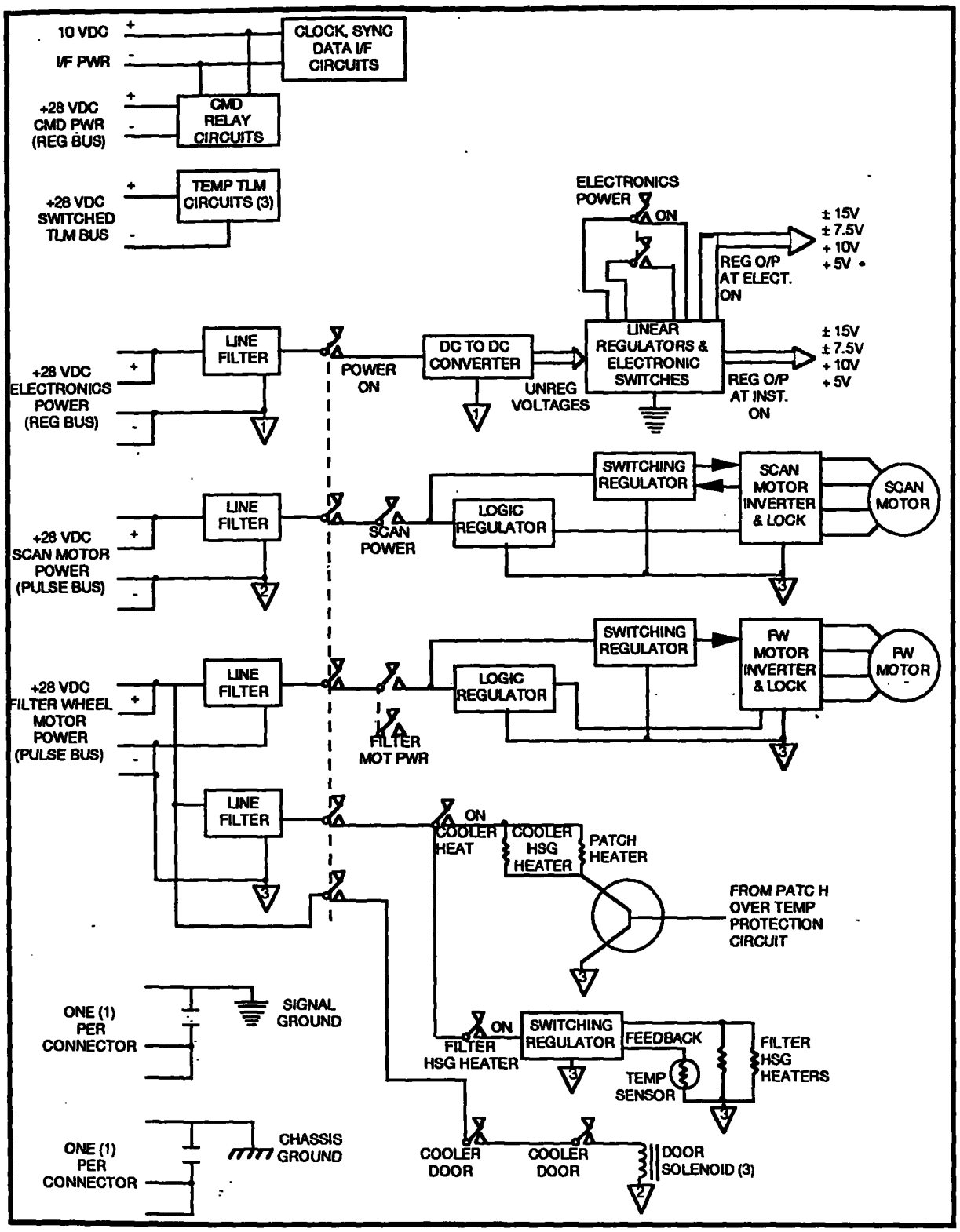

Figure 18.2-15. HIRS/3 Power Distribution.

18.2.10 OPERATIONAL MODES

The HIRS/3 scan system has three basic modes of operations: 1) launch mode, 2) mission mode, and 3) commanded position mode. In addition to these, continuous step mode is introduced automatically if the reference tracks are lost during normal mission mode. The following discussion is a detailed functional description of the scan system as it performs under the different modes of operation.

18.2.10.1 Launch Mode

Launch mode is used during the launch of the HIRS/3 into orbit. To enter launch mode, Instrument Power and Scan Power must be commanded ON without Electronics Power being commanded ON. In this condition, absence of ±10VDC-2 is detected and the following conditions are forced:

(a) The REF LOST detector is held in reset condition.

(b) GO-TO logic is inhibited from recognizing a Position Command.

(c) STEP/SLEW logic is forced into slew condition, which in turn forces UP/DOWN logic into UP condition.

(d) Power control logic (within position track logic function block) controls the scan regulator to launch power level (low power).

(e) Encoder electronics are inhibited from generating position track signals.

(f) Scan mirror rotates continuously at 78 steps per second in the low power mode.

18.2.10.2 Orbit Mode

18.2.10.2.1 General

Mission mode is the normal operating mode of the HIRS/3 scan instrument. To enter into this mode, Instrument Power, Scan Power and Electronics Power must all be commanded ON. Normally, CAL ENABLE would be commanded on, in which case, the scan would perform a calibration sequence each 256 seconds (40 line intervals). That is, the scan would Earth scan/retrace 38 lines, perform a calibrate sequence for 2 line intervals, then repeat. The 2 line calibrate sequence can be omitted by commanding CAL DISABLE. Whenever CAL ENABLE is commanded from a CAL DISABLE condition, the scan will perform a calibrated sequence initiated by the first major frame pulse following the CAL ENABLE command. Thereafter, a calibrate sequence will be performed whenever a CAL START pulse (256 seconds) is received, as long as the CAL ENABLE condition exists. Outgassing of the instrument is done after electronics ON is sent (see Activation Sequence, Section 18.2.9).

18.2.10.2.2 Detailed Orbit Mode Description

To enter Orbit mode from launch mode only requires that Electronics Power be commanded ON. It should be noted that when Instrument Power is commanded off, CAL ENABLE and POSITION DISABLE are automatically accomplished. Figure 18.2-16 is a detailed block diagram of the scan system to aid in following this description. The functional blocks in this diagram do not represent division of functions per subassembly, circuit card assembly, etc., as they are incorporated in the scan system.

When Electronics Power is commanded ON, encoder electronics and position track logic are immediately enabled. This causes scan power to immediately go to high power mode, slew rate remaining at 78 steps per second until the scan reaches the start of scan position (REF-0). This track is now recognized; the slew clock is commanded to stop and the scan regulator is switched to low power. When the scan enters the REF track, which is 5.4° of arc, the amplifier controlling the torque motor is switched to high gain condition to assist in stopping the scan motion. This damping action endures for about 80 milliseconds. The track, in conjunction with motor step zero (of zero through 3) causes the stepper motor to settle with the scan centered in the REF track. Also, when Electronics Power is commanded ON, a start-up delay latch is enabled, which is set on the trailing edge of the first following major frame pulse (32). This in turn enables the REF LOST detector and CAL STT-UP (calibration start-up) latch. The STEP/SLEW logic is still forced into SLEW condition (now by virtue of the CAL STT-UP latch being set), thus, the scan remains at start of scan position.

The leading edge of the next major frame pulse clocks the STT-UP latch to a reset condition. This initiates a calibrate sequence, which is controlled by a shift register in the CAL SEQUENCE GENERATOR. Now a signal indicating that a calibrate cycle is in process continues to force the STEP/SLEW logic to SLEW condition.

When the calibrate sequence is initiated, the REF-0 latch is cleared, the slew clock starts, and the shift register prepares the position track logic circuits to recognize SPACE TRACK, MOTOR STEP 0. Removal of the SL CL STP (slew clock stop) signal causes an ACC SL STT (accelerated slew start) pulse to be generated. This initiates generation of an accelerated slew/ramp by a generator which contains an oscillator, up/down counter and DAC, along with associated control logic. Duration of the up/down ramp is 0.5 seconds. It is applied to the slew clock rate control and causes the slew rate to increase for about 0.25 seconds, then decrease in the next 0.25 seconds (again to 78 steps per second). Amplitude of the ramp is determined by switching selected loads on the DAC output, the switching being controlled by the CAL SEQUENCE shift register. Slew to SPACE position has the most severe ramp, resulting in a peak slew rate of nearly 200 steps per second. Slew from position to position during a calibrate sequence is nominally accomplished in 0.5 to 0.6 seconds then allowing 0.2 to 0.3 seconds additional (0.8 seconds total) for settling into the position.

Subsequently, scan element "56" (SE56) pulse from the Scan Element Counter/Decoder advances the shift register until it has cleared itself. At this time, the scan has advanced to REF-0 and is awaiting the next first scan element "0" (SE0) pulse from the Scan Element Counter Decoder to initiate its next action.

If no other command has been given (such as a Position Command), at receipt of SE0 signal, the step latch will be set (in the step/slew logic) and the stepper motor will begin to step forward (up) at 10 steps per second as determined by 10 pps from the Scan Element Counter/Decoder. A special feature called retrotorque damping is used to control the characteristic with which the scan settles into each step position. At the time that the motor winding control is changed to a braking function (retrotorque), the DC torque motor is energized to aid in step settling.

Stepping continues at 10 steps per second until SE56 is received. At this time, the step latch is reset to slew condition, the UP/DOWN latch is reset to down, the scan power level is switched to high, the slew clock is enabled and an accelerated slew ramp is generated. Thus, at receipt of SE56, the scan ramp slew backward (down or "retrace") at high torque level until it reaches the reference track, motor step 0, at which time the slew clock is commanded to stop, the scan halts, and scan power level goes to low. (It should be noted here that the scan will always stop at REF-0 when Electronics Power is ON, and wait for the next SE0 pulse before proceeding with any further action.) Unless altered by receipt of another command, the scan will continue this

step/retrace until a cal start (256) pulse is received, at which time an automatic calibrate sequence

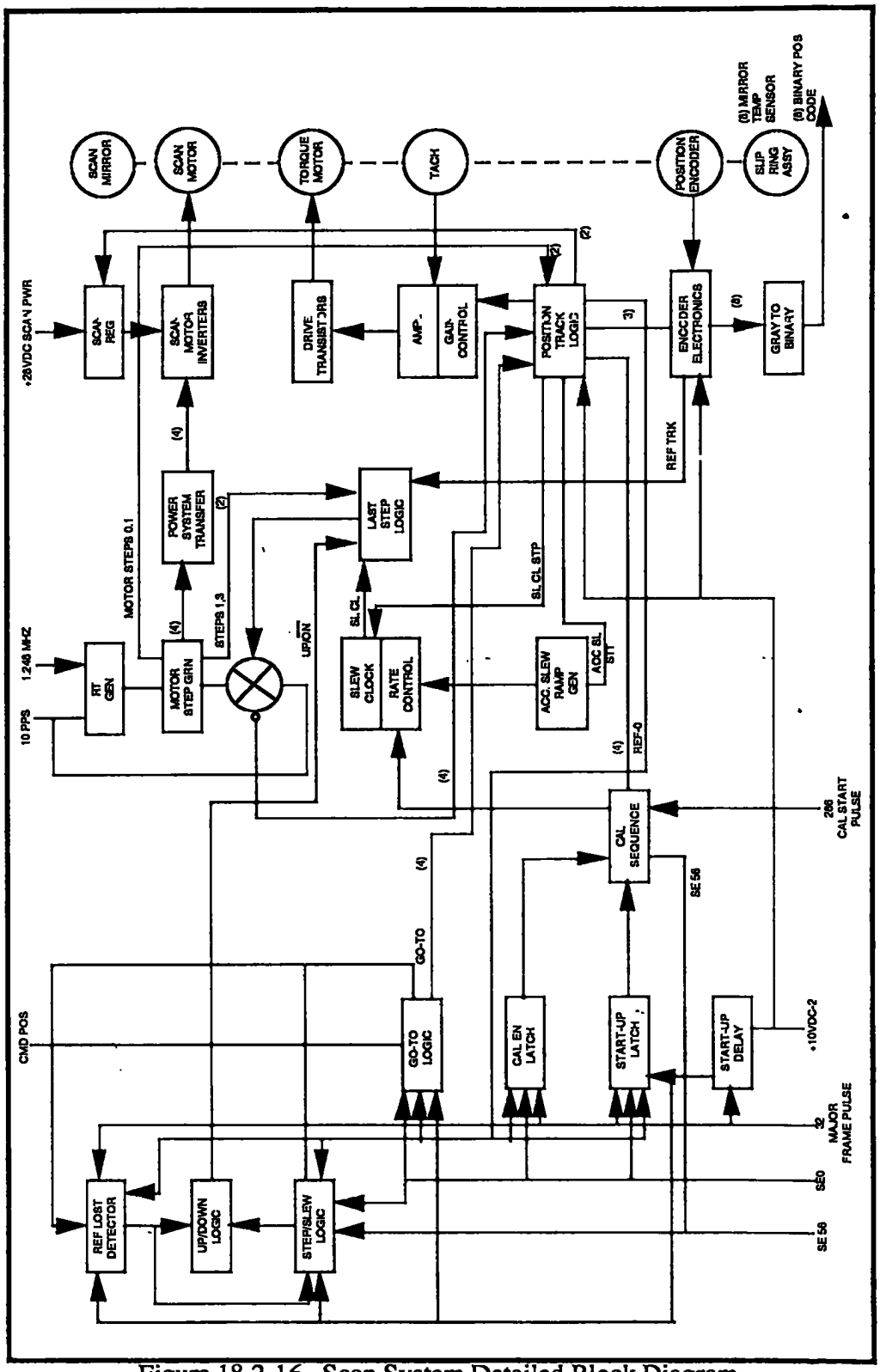

Figure 18.2-16. Scan System Detailed Block Diagram.

is again performed. As long as CAL ENABLE command is in effect, and no other command is received to alter scan operation, the scan will continue repeating scan/retrace for 38 lines, calibrate sequence for 2 line intervals.

If a position is commanded with CAL ENABLE in effect, the scan continues its present operation until it reaches REF-0. There, it awaits SE0 signal at which time step/slew logics are forced to slew condition, which in turn forces up/down logic into UP condition. An accelerated slew ramp is generated, however, severity of rate control is very slight. When a Position Command has been acknowledged, all other scan operations are ignored until a POSITION DISABLE command is received. A position command cannot be received unless CAL ENABLE is in effect. However, once the Position command has been received, the Position will be maintained even though CAL DISABLE command has been received.

Upon receipt of POSITION DISABLE command, slew clock is enabled, accelerated slew ramp is generated, and scan power level goes high. Thus, the scan ramp slew forward immediately in search of REF-0 position.

When CAL DISABLE is in effect, cal start (256) pulse is ignored and position commands are ignored. Thus, the scan enters a continuous step/retrace mode.

18.2.10.3 Commanded Position Mode

This mode can only be entered from normal mission mode. CAL ENABLE condition must exist and a position commanded (i.e., NADIR, Space, ICT or IWT). After a position command is entered, the scan will continue its present operation until it reaches REF-0. The scan will then wait at REF-0 until the SE0 pulse is received from the Scan Element Counter/Decoder. At receipt of SE0 pulse, the scan will slew forward to the commanded position. It will remain at the commanded position until a POSITION DISABLE command is received. Immediately upon receipt of a POSITION DISABLE command, the scan will leave the position and slew forward to REF-0.

A position would normally be commanded only in the event of a suspected imminent rotation failure of the Scan System or to extract long-term calibration data at a calibration position.

In the event of imminent failure of the scan rotational system, it may be advisable to achieve the position, then command Scan Power OFF. In this case, the scan mirror will remain at rest 0.9° (1/2 step) from the energized position. That is, if Nadir Position is achieved, then, Scan Power OFF is commanded, the scan will rest at a position midway between steps 27 and 28 (1.8° from true nadir).

18.2.10.4 Continuous Step Mode

The Continuous Step Mode cannot be entered into by command. If the scan is in normal mission mode (Position Disabled), and two consecutive major frame pulses are received without an REF-0 signal being generated, the scan will enter a continuous forward stepping mode at the normal stepping rate of 0.1 seconds per step or 20 seconds per rotation until it seeks the reference track, motor step 0 (REF-0). (Complete radiometric data from Earth scan, space, and IWT will be available during each rotation. It is possible to modify ground system programs to recover this sounding data, which would include a 56 step Earth look and a look at each calibration position on each rotation. The 20 second repetition rate in place of 6.4 seconds would reduce resolution along the satellite track to one-third the original. Calibration data would need to be accumulated for averaging.)

If this is during retrace, it will continue slewing until SE0 signal sets the UP/DOWN logic to UP condition. Then, it will slew forward in search of REF-0. This will continue until the 2nd major frame pulse, at receipt of which the reference lost latch is set, forcing the step/slew logic into step condition, and UP/DOWN logic into UP condition, disabling SE56 from reversing the UP/DOWN logic. Thus, the scan will continuously step forward in low power mode. Calibrate logic is disabled. Position commands can be received if CAL ENABLE is in effect. However, the position will be achieved by position track logic disabling the step generator when the position has been reached. When the position disable command is given, the step generator is enabled and the scan continues stepping forward at 10 steps per second.

If at any time a reference track signal is generated, the REF LOST latch is reset and normal operation is attempted.

18.2.11 CALIBRATION REQUIREMENTS

The Calibration Enable command enables the radiometric calibration control logic. Calibration is activated by the calibration start pulse (CSP) which occurs every 256 seconds. The CSP initiates a sequence of scans that provide radiometric calibration of the instrument. When the Calibration Disable command is in effect, the CSP will be ignored and the instrument will continue its normal scan sequence.

18.2.12 ROUTINE COMMAND REQUIREMENTS

Command requirements are shown in Section 18.2.6 of this document.

18.2.13 EVALUATION OF NOMINAL PERFORMANCE AND TREND REQUIREMENTS

On-orbit nominal performance of the HIRS/3 is represented in Figure 18.2-5. The on-orbit temperatures and currents levels should be within the limits shown in this figure.

18.2.14 CONSTRAINTS

The various modes of operation have specific requirements (constraints) that must be met, either prior to initiation of a mode or after it has been established. Constraints imposed for the various operating modes are listed in the following paragraphs.

18.2.14.1 Pre-launch Mode

(a) The cooler door must be verified latched.

(b) Cooler and scan cavity dust covers must remain in place for testing.

(c) Baseplate temperature limits, during all modes, is 10 to 30°C.

(d) The decontamination heater system for the radiant cooler is a thermostatically controlled system designed to limit radiant cooler temperature to a maximum of 30°C.

18.2.14.2 Launch Mode

(a) Verify that dust covers are removed prior to launch.

(b) The cooler door can be opened only once, and not reclosed. Therefore, it should not be opened until after the initial outgas period, after 14 days on-orbit.

(c) For protection of bearing surfaces, etc., the HIRS/3 should be launched with the scan mirror ON.

(d) The chopper-filter motor should be ON at launch.

(e) The chopper-filter motor should be in NORMAL (low) mode at launch.

(f) In order to execute a go-to command, the instrument must be in the calibration ENABLE mode.

(g) See activation sequence 18.2.9.

18.2.14.3 Activation Constraints

Activation constraints are given in the A&E procedures and timeline, Section 18.2.9.

18.2.14.4 Orbit Mode Constraints

The cooler door opening mechanism has a time-out device which automatically disables the solenoid after the door has opened. For safety, however, the cover release DISABLE command should be transmitted after positive indication has been received that the door is open. There is a minimum 14 day outgassing period prior to opening the cooler door. In addition, turn on of the electronics must be delayed an additional day after the heater is turned off and the cooler door opened to allow the detectors to cool.

18.3 ADVANCED MICROWAVE SOUNDING UNIT-A1 (AMSU-A1)

18.3 ADVANCED MICROWAVE SOUNDING UNIT-A1 (AMSU-A1)

18.3.1 FUNCTION DESCRIPTION

The Advanced Microwave Sounding Unit-A1 (AMSU-A1) space-flight instrument is a multi-channel microwave radiometer that will be used for measuring global atmospheric temperature profiles from the Advanced TIROS-N (ATN) spacecraft. In addition to temperature profiles, the AMSU-A1 system will provide information on atmospheric water in all of its forms with the exception of small ice particles, which are transparent at microwave frequencies.

AMSU-A1 is a cross-track, line-scanned instrument designed to measure scene radiances in 13 discrete frequency channels which permit the calculation of the vertical temperature profile from about 3 millibars (45 km) pressure height to the Earth's surface. At each channel frequency, the antenna beamwidth is a constant 3.3° (at the half power point). Thirty contiguous scene resolution cells are sampled in a stepped-scan fashion every eight seconds, each scan covering 50° on each side of the subsatellite path. These scan patterns and geometric resolution translate to a 50 km diameter cell at nadir and a 2,343 km swath width from the 870 km nominal orbital altitude.

18.3.2 SYSTEM DESCRIPTION

18.3.2.1 General

The AMSU-A system is implemented in two separate modules. Hardware for the two lowest frequencies is located in one module (AMSU-A2) and that for the remaining thirteen frequencies in the second module (AMSU-A1). This arrangement puts the two lower atmospheric moisture viewing channels into one module and the oxygen absorption channels into a second common module to ensure commonality of viewing angle independent of any module and/or spacecraft misalignment due to structural or thermal distortions. The AMSU-A1's concept of multiplexing thirteen frequencies in this second module is provided by a two-antenna system. This multiplexing approach provides minimum front-end RF loss and a constant 3.3° antenna beamwidth with greater than 95 percent beam efficiency.

AMSU-A1 consists of 12 V-band channels (3 through 14) and one W-band channel (15) and associated circuitry. This module provides a complete and accurate vertical temperature profile of the atmosphere from the Earth's surface to a height of approximately 45 km. The radiometer characteristics of the AMSU-A1 channels are summarized in Figure 18.3-1.

Channel Number	Center Frequency	No. of Pass Bands	Bandwidth (MHz)	Center Frequency Stability (MHz)	Temperature Sensitivity (K) NEΔT	Calibration Accuracy (K)	Beam Diameter (degrees)	Polarization at NADIR
3	50300 MHz	1	180	10	0.4	1.5	3.3	V
4	52800 MHz	1	400	5	0.25	1.5	3.3	V
5	53596 MHz ± 115 MHz	2	170	5	0.25	1.5	3.3	H
6	54400 MHz	1	400	5	0.25	1.5	3.3	H
7	54940 MHz	1	400	5	0.25	1.5	3.3	V
8	55500 MHz	1	330	10	0.25	1.5	3.3	H
9	57290.344 MHz = f_{LO}	1	330	0 5	0.25	1.5	3.3	H
10	f_{LO} ± 217 MHz	2	78	0.5	0.4	1.5	3.3	H
11	f_{LO} ± 322.2 ± 48 MHz	4	36	1.2	0.4	1.5	3.3	H
12	f_{LO} ± 322.2 ± 22 MHz	4	16	1.2	0.6	1.5	3.3	H
13	f_{LO} ± 322.2 ± 10 MHz	4	8	0.5	0.8	1.5	3.3	H
14	f_{LO} ± 322.2 ± 4.5 MHz	4	3	0.5	1.2	1.5	3.3	H
15	89.0 GHz	1	1500	50	0.5	2.0	3.3	V

Figure 18.3-1. AMSU-A Channel Descriptions.

AMSU-A1 is configured in the following major subsystems: Antenna/Drive/Calibration Subsystem; Receiver Subsystem; Signal Processor Subsystem and Structural/Thermal Subsystem.

18.3.2.2 Antenna/Drive/Calibration System

The Antenna/Drive/Calibration subsystem consists of a conical corrugated horn-fed shrouded reflector, multiplexer, closed-loop antenna scan drive assembly and closed path calibration assembly. The shrouded reflector is rotated once every scan line (8 sec) for:

(1) each of 30 earth viewing scene observations,

(2) a view of the cosmic background (~3K), and

(3) a view of a warm calibration load (~300K).

During the rotation cycle, the shroud prevents solar reflections from interacting with the warm load and also ensures maximum coupling of the source radiation to the antenna feed. A complete end-to-end inflight calibration is achieved in a through-the-antenna method, which provides maximum inflight calibration accuracy. The accuracy of the warm calibration load brightness temperature is better than ± 0.2K. The closed loop antenna scan drive provides beam pointing accuracy within ± 0.2°. A resolver in the antenna drive assembly provides antenna beam position information.

The AMSU-A1 modules contain two antenna assemblies: designated A1-1 and A1-2. Antenna A1-1 is located the farthest from Earth inflight and provides inputs to channels 6 and 7 and channels 9 through 15. A1-2 is located closest to Earth inflight and provides input to channels 3 through 5 and 8.

18.3.2.3 Receiver Subsystem

All AMSU-A1 receiver channels are of the total power superheterodyne type. Each channel provides RF to IF conversion, IF amplification, filtering of the frequency bands, detection and video amplification. An isolator precedes the RF to IF conversion to prevent the possibility of any local oscillator power leaking through the antenna and being reflected back into the receiver.

The AMSU-A1 receiver uses fundamentally pumped double balanced mixers for all channels, high-Q cavity stabilized local oscillators for Channels 3-8 and 15 and a phase locked oscillator system for Channels 9 - 14. This type of configuration provides both very good receiver noise figure performance and high frequency stability. IF filters in the AMSU-A1 receiver provide greater than 40 dB out-of-band rejection. In the extremely narrow IF channels (Channels 11, 12, 13 and 14), SAW filters are used. Tunnel diode detectors are used because of their superior I/F frequency, gain and temperature stability.

18.3.2.3.4 Signal Processor Subsystem

The signal processor subsystem consists of a video processor, analog to digital (A/D) converter, microprocessor, memory, FIFO, timing and control circuitry, DC/DC converters and spacecraft interface circuitry. All channels of radiometric data, antenna position data, temperature of the warm calibration load and critical components, and digital and analog housekeeping data are provided to the spacecraft telemetry system via spacecraft interface circuits.

18.3.2.3.5 Structural/Thermal Subsystem

A modularized structural/packaging configuration incorporating passive thermal control is used. This modularity provides accessibility for ease of fabrication, assembly and test of the various subsystems independently of each other. The mechanical/structural subassembly uses a box-type structure with honeycomb panels to integrate the various subsystems. The enclosure and internal structure are designed to eliminate RFI/EMI produced by the spacecraft's high power telemetry transmitters. The AMSU-A1 utilizes second surface mirrors, second surface silvered teflon tape and multilayer insulation for passive thermal control.

18.3.3 ELECTRICAL AND MECHANICAL BLOCK DIAGRAMS

The AMSU-A1 module is configured in the same fashion and consist of four major subsystems: the antenna/drive/calibration subsystem, the receiver subsystem, the signal processing subsystem, and the structural/thermal subsystem. Figure 18.3-2 shows the mechanical configuration of the module. The thermal control of the configuration is passive, utilizing gold kapton, aluminum kapton, silver teflon, and multilayer insulation (MLI) on the various instrument surfaces to control temperature. Figure 18.3-3 is the electrical block diagram for AMSU-A1 and identifies the three major electrical subsystems.

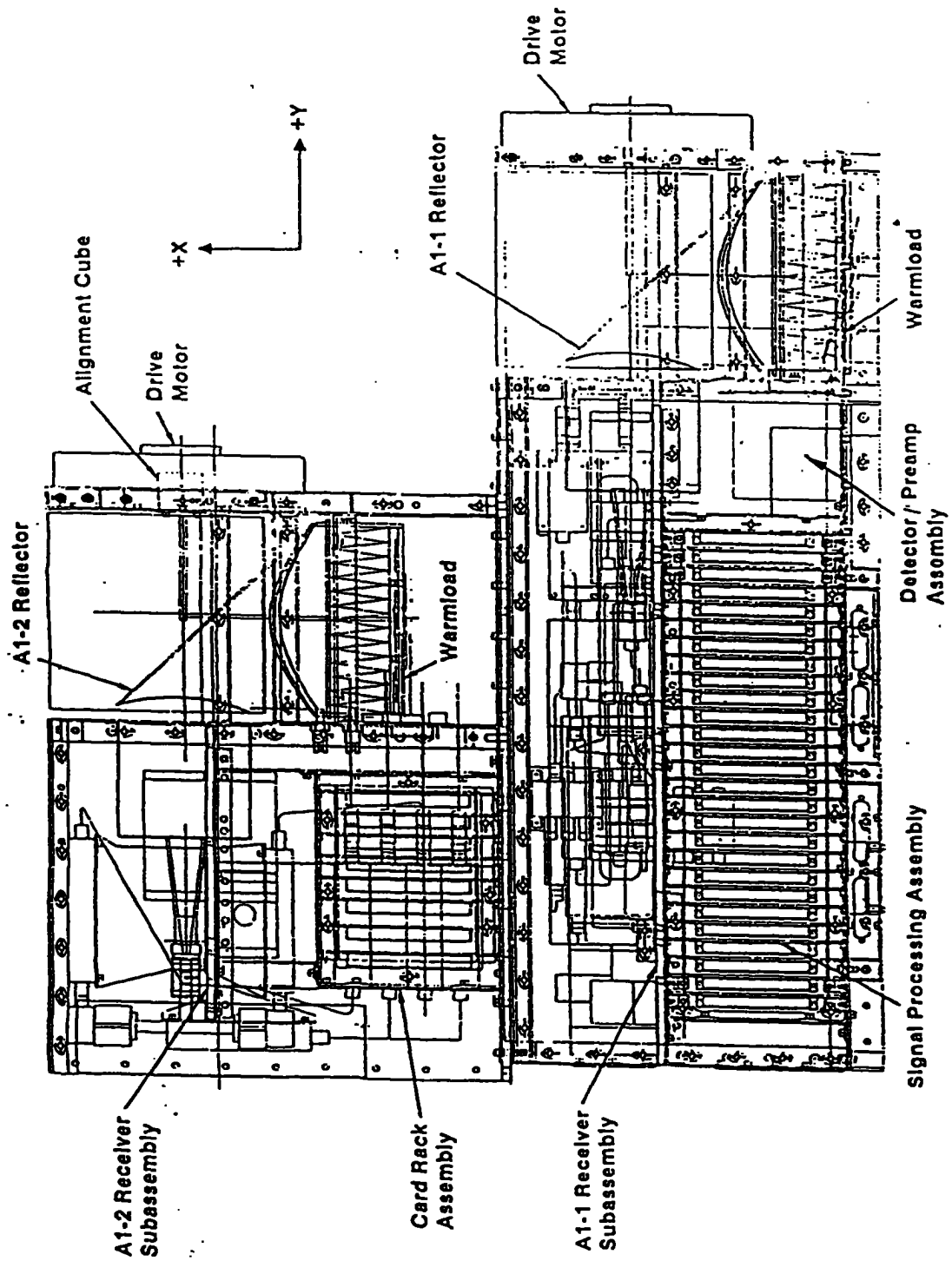

Figure 18.3-2. AMSU-A1 Mechanical Layout.

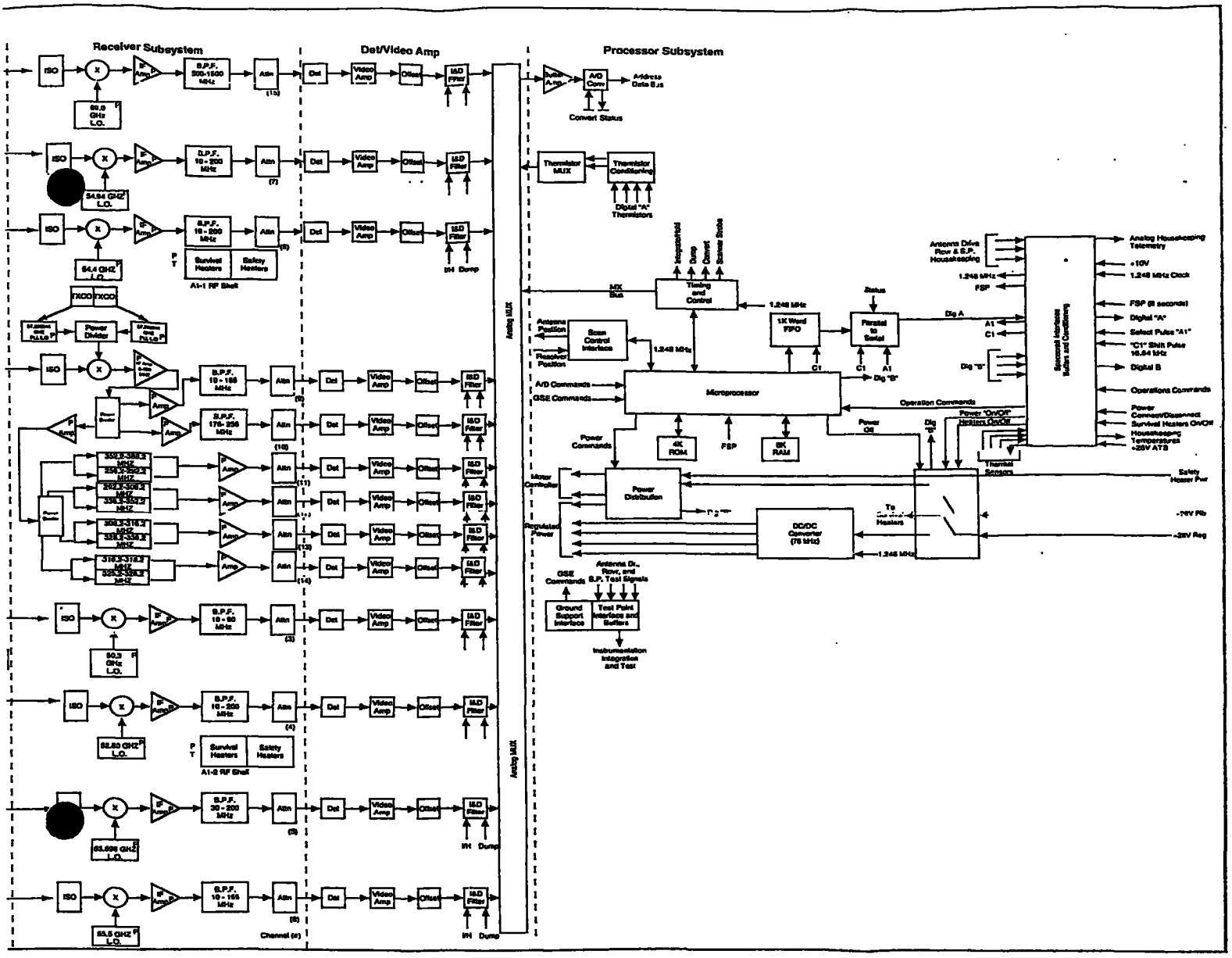

Figure 18.3-3. AMSU-A1 Block Diagram.

18.3.4 INTERFACE TIMING

The interface timing for the AMSU-A1 module is shown in Figure 18.3-4.

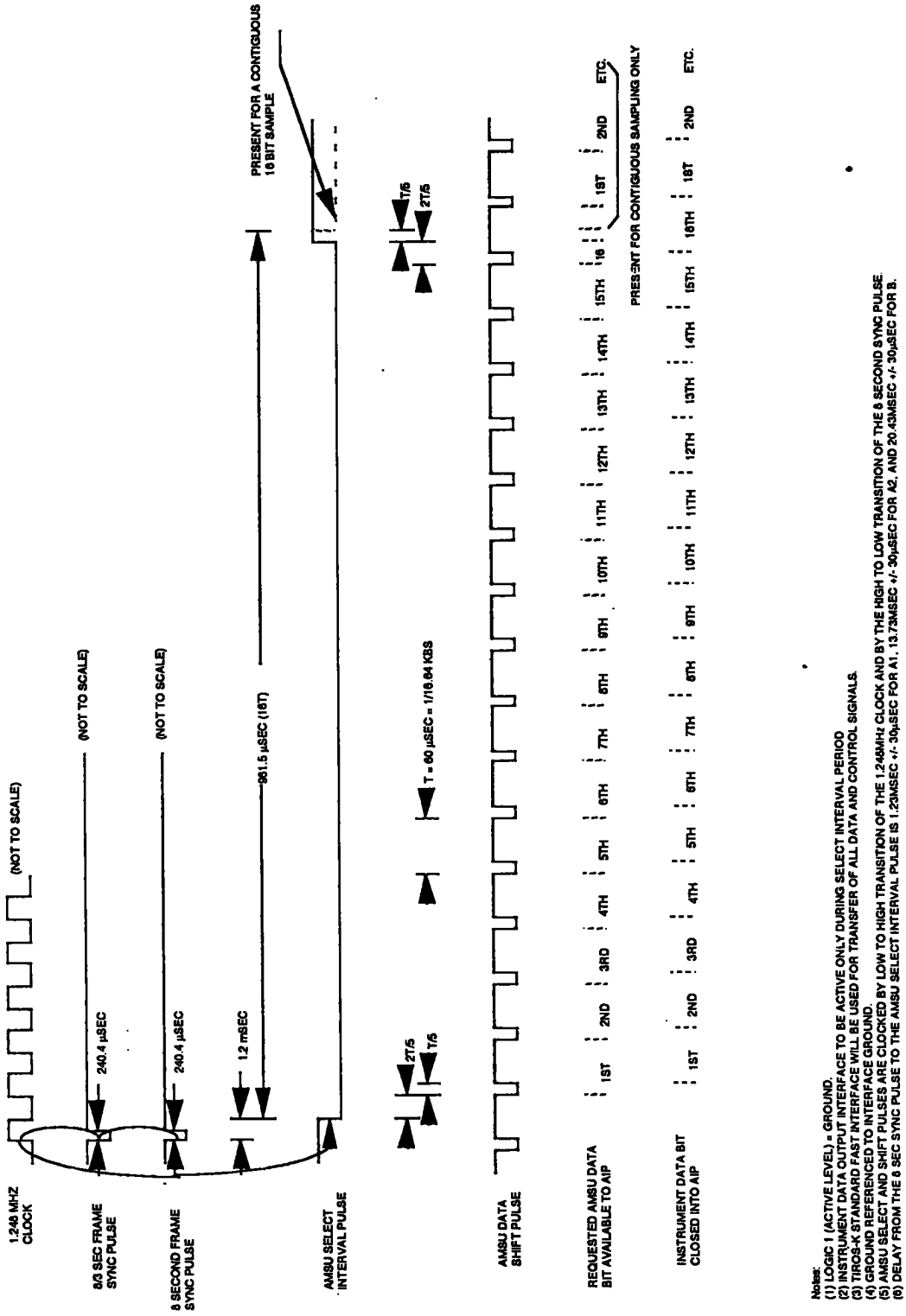

Figure 18.3-4. AMSU-A1 Data Interface Timing.

18.3.5 INSTRUMENT TELEMETRY

18.3.5.1 Analog Telemetry

The AMSU-A1 analog telemetry consists primarily of temperatures of critical subsystems, motor currents, and critical voltages for operation of the instrument. AMSU-A1 has 27 analog telemetry points, which are shown in Figure 18.3-5.

No.	Telemetry Point Name	Range (Red Limit)	Range (Yellow Limit)	Ch# (mnf#)
1	A1-1 Scanner Motor Temperature*, Deg. C	-30 to +66	-20 to +58	*388(4)
2	A1-2 Scanner Motor Temperature*, Deg. C	-30 to +66	-20 to +58	389(5)
3	RF Shelf A1-1 Temperature*, Deg. C	-30 to +66	+8 to +28	396(12)
4	RF Shelf A1-2 Temperature*, Deg. C	-30 to +66	+8 to +28	397(13)
5	Warm Load A1-1 Temperature*, Deg. C	-30 to +66	-20 to +58	399(15)
6	Warm Load A1-2 Temperature*, Deg. C	-30 to +66	-20 to +58	403(19)
7	Antenna A1-1 Drive Motor Current (Average)	50 to 107mA	N/A	404(20)
8	Antenna A1-2 Drive Motor Current (Average)	50 to 107mA	N/A	406(22)
9	+15 VDC (Signal Processing)	14 to 16V	N/A	407(23)
10	+15 VDC (Antenna Drive)	13.5 to 16.5V	N/A	411(27)
11	-15 VDC (Signal Processing)	-16 to -14V	N/A	412(28)
12	-15 VDC (Antenna Drive)	-16.5 to -13.5V	N/A	415(31)
13	+8 VDC (Receiver Amplifiers)	7 to 9V	N/A	419(35)
14	+5 VDC (Signal Processing)	4 to 6V	N/A	420(36)
15	+5 VDC (Antenna Drive)	4 to 6V	N/A	421(37)
16	+8.5 VDC Phase Lock Loop Ch 9/14	7.5 to 9.5V	N/A	423(39)
17	+15 VDC Phase Lock Loop Ch 9/14	14 to 16V	N/A	427(43)
18	-15 VDC Phase Lock Loop Ch 9/14	-16 to -14V	N/A	428(44)
19	GDO Voltage 50.3 GHz Ch 3	5 to 7V	N/A	429(45)
20	GDO Voltage 52.8 GHz Ch 4	4.75 to 6.75V	N/A	431(47)
21	GDO Voltage 53.596 GHz Ch 5	4.8 to 6.8V	N/A	435(51)
22	GDO Voltage 54.4 GHz Ch 6	4.4 to 6.4V	N/A	436(52)
23	GDO Voltage 54.94 GHz Ch 7	4.5 to 6.5V	N/A	437(53)
24	GDO Voltage 55.5 GHz Ch 8	4.3 to 6.3V	N/A	439(55)
25	PLLO Primary Lock Detect	0 to 15V	N/A	443(59)
26	PLLO Redundant Lock Detect	0 to 15V	N/A	444(60)
27	GDO Voltage 84.0 GHz Ch 15	4.85 to 6.85V	N/A	445(61)

*Powered by the +28V Analog TLM Bus

Figure 18.3-5. AMSU-A1 Analog Telemetry.

18.3.5.2 Digital "B" Telemetry

The AMSU-A1 Digital "B" telemetry consists of instrument housekeeping data. AMSU-A1 has eleven Digital "B" telemetry points and one spare, which are identified in Figure 18.3-6.

18.3.5.3 Digital "A" Telemetry

The AMSU-A1 Digital "A" telemetry incorporates all of the radiometric data taken during one scan. It also includes the data from the on-orbit calibrations. In the Full Scan Mode, the AMSU-A1 has 1,244 Digital "A" telemetry points, as identified in Figure 18.3-7. Figure 18.3-8 through 18.3-10 identify the 1,120 telemetry points for each of the warm calibration, cold calibration, and

nadir modes, respectively. Figure 18.3-11 provides the data word description of AMSU-A1 digital housekeeping, temperature sensor, and unit identification/serial number bytes.

No.	Telemetry Point Name	State*		Ch#
		Logic "1"	Logic "0"	
1	Scanner A1-1 Power ON/OFF**	ON	OFF	56
2	Scanner A1-2 Power ON/OFF**	ON	OFF	88
3	Phase Lock Loop	PRIMARY	REDUNDANT	120
4	Antenna in Warm Cal Position	YES	NO	152
5	Antenna in Cold Cal Position	YES	NO	184
6	Antenna in Nadir Position	YES	NO	216
7	Full Scan	YES	NO	248
8	Survival Heater ON/OFF**	ON	OFF	25
9	Module Power**	CONNECT	DISCONNECT	57
10	Cold Cal Position MSB	See Note (1)	See Note (1)	89
11	Cold Cal Position LSB	See Note (1)	See Note (1)	121
12	Spare			153

*Logic "1" is a "Low Voltage" State

** Must correctly indicate power status with instrument power OFF.

NOTE (1):

MSB	LSB	
0	0	6.667° from -Z
0	1	8.333° from -Z
1	0	9.999° from -Z
1	1	13.332° from -Z

NOTE (2): If telemetry points 4, 5, 6 & 7 all indicate Logic "0", the instrument is operating with the antenna in warm cal position.

Figure 18.3-6. Digital "B" Telemetry for AMSU-A1.

A1 FRAME BYTE NO.	PARAMETER
1-3	Sync. Sequence (FF Hex)
4	Unit Identification and Serial Number
5	Digital Housekeeping Data 1
6	Digital Housekeeping Data 2
7	Digital Housekeeping Data 3
8	Digital Housekeeping Data 4
9	Reflector 1, Position 1, MSP, First reading
10	Reflector 1, Position 1, LSP, First reading
11	Reflector 2, Position 1, MSP, First reading
12	Reflector 2, Position 1, LSP, First reading
13	Reflector 1, Position 1, MSP, Second reading
14	Reflector 1, Position 1, LSP, Second reading
15	Reflector 2, Position 1, LSP, Second reading
16	Reflector 2, Position 1, LSP, Second reading
17	Scene Position 1, Channel 3, MSP
18	Scene Position 1, Channel 3, LSP
19	Scene Position 1, Channel 4, MSP
20	Scene Position 1, Channel 4, LSP

Figure 18.3-7. AMSU-A1 Digital "A" Data Format - Full Scan Mode.

A1 FRAME BYTE NO.	PARAMETER
.	.
.	.
41	Scene Position 1, Channel 15, MSP
42	Scene Position 1, Channel 15, LSP
43	Reflector 1, Position 2, MSP, First reading
44	Reflector 1, Position 2, LSP, First reading
45	Reflector 2, Position 2, MSP, First reading
46	Reflector 2, Position 2, LSP, First reading
47	Reflector 1, Position 2, MSP, Second reading
48	Reflector 1, Position 2, LSP, Second reading
49	Reflector 2, Position 2, MSP, Second reading
50	Reflector 2, Position 2, LSP, Second reading
51	Scene Position 2, Channel 3, MSP
52	Scene Position 2, Channel 3, LSP
.	.
.	.
75	Scene Position 2, Channel 15, MSP
76	Scene Position 2, Channel 15, LSP
77	Reflector 1, Position 3, MSP, First reading
78	Reflector 1, Position 3, LSP, First reading
79	Reflector 2, Position 3, MSP, First reading
80	Reflector 2, Position 3, LSP, First reading
81	Reflector 1, Position 3, MSP, Second reading
82	Reflector 1, Position 3, LSP, Second reading
83	Reflector 2, Position 3, MSP, Second reading
84	Reflector 2, Position 3, LSP, Second reading
85	Scene Position 3, Channel 3, MSP
86	Scene Position 3, Channel 3, LSP
.	.
.	.
1027	Scene Position 30, Channel 15, MSP
1028	Scene Position 30, Channel 15, LSP
1029	Reflector 1, Cold Cal. Position, MSP, First reading
1030	Reflector 1, Cold Cal. Position, LSP, First reading
1031	Reflector 2, Cold Cal. Position, MSP, First reading
1032	Reflector 2, Cold Cal. Position, LSP, First reading
1033	Reflector 1, Cold Cal. Position, MSP, Second reading
1034	Reflector 1, Cold Cal. Position, LSP, Second reading
1035	Reflector 2, Cold Cal. Position, MSP, Second reading
1036	Reflector 2, Cold Cal. Position, LSP, Second reading
1037	Cold Calibration 1, Channel 3, MSP
1038	Cold Calibration 1, Channel 3, LSP
1039	Cold Calibration 1, Channel 4, MSP
1040	Cold Calibration 1, Channel 4, LSP
.	.
.	.
1061	Cold Calibration 1, Channel 15, MSP
1062	Cold Calibration 1, Channel 15, LSP
1063	Cold Calibration 2, Channel 3, MSP
1064	Cold Calibration 2, Channel 3, LSP

Figure 18.3-7. AMSU-A1 Digital "A" Data Format - Full Scan Mode (Continued).

A1 FRAME BYTE NO.	PARAMETER
1065	Cold Calibration 2, Channel 4, MSP
1066	Cold Calibration 2, Channel 4, LSP
.	.
.	.
1087	Cold Calibration 2, Channel 15, MSP
1088	Cold Calibration 2, Channel 15, LSP
1089	Temp Sensor 1, MSP
1090	Temp Sensor 1, LSP
1091	Temp Sensor 2, MSP
1092	Temp Sensor 2, LSP
.	.
.	.
1177	Temp Sensor 45, MSP
1178	Temp Sensor 45, LSP
1179	Temp Sensor Reference Voltage, MSP
1180	Temp Sensor Reference Voltage, LSP
1181	Reflector 1 Warm Cal. Position, MSP, First reading
1182	Reflector 1 Warm Cal. Position, LSP, First reading
1183	Reflector 2 Warm Cal. Position, MSP, First reading
1184	Reflector 2 Warm Cal. Position, LSP, First reading
1185	Reflector 1 Warm Cal. Position, MSP, Second reading
1186	Reflector 1 Warm Cal. Position, LSP, Second reading
1187	Reflector 2 Warm Cal. Position, MSP, Second reading
1188	Reflector 2 Warm Cal. Position, LSP, Second reading
1189	Warm Calibration 1, Channel 3, MSP
1190	Warm Calibration 1, Channel 3, LSP
.	.
.	.
1213	Warm Calibration 1, Channel 15, MSP
1214	Warm Calibration 1, Channel 15, LSP
1215	Warm Calibration 2, Channel 3, MSP
1216	Warm Calibration 2, Channel 3, LSP
.	.
.	.
1239	Warm Calibration 2, Channel 15, MSP
1240	Warm Calibration 2, Channel 15, LSP
.	.
1241-1243	Sync. Sequence (FF Hex)
1244	Unit Identification and Serial Number

Figure 18.3-7. AMSU-A1 Digital "A" Data Format - Full Scan Mode (Continued).

A1 FRAME BYTE NO.	PARAMETER
NOTE 1:	In the above table, the MSP is the most significant portion of a particular measurement; the LSP is the least significant portion of the particular measurement.
NOTE 2:	In the above table, the first set of readings for a particular reflector position are made prior to the integration interval; the second set of readings are made approximately 1/2 way through the integration period.
NOTE 3:	Digital "A" data as read by the spacecraft shall contain an undetermined number of "fill words". These fill words shall be 0001H and will be intermingled with valid data. The Digital "A" data as sent by the instrument shall be such that no valid data of 0001H shall be included.
NOTE 4:	Format of Position data is: DDDDDDDDDDDDDDE0 D = Data E = Error bit: 0 = not in spec, 1 = spec. 0 = Zero
NOTE 5:	Format of Radiometer data is: DDDDDDDDDDDDDD0 D = Data 0 = Zero
NOTE 6:	Temperature Sensor Reference Voltage utilized for temperature sensors 36-45 only.

Figure 18.3-7. AMSU-A1 Digital "A" Data Format - Full Scan Mode (Continued).

A1 FRAME BYTE NO.	PARAMETER
1-3	Sync. Sequence (FF Hex)
4	Unit Identification and Serial Number
5	Digital Housekeeping Data 1
6	Digital Housekeeping Data 2
7	Digital Housekeeping Data 3
8	Digital Housekeeping Data 4
9	Reflector 1, Warm Cal. Position, MSP, First Reading
10	Reflector 1, Warm Cal. Position, LSP, First Reading

Figure 18.3-8. AMSU-A1 Digital "A" Data Format - Warm Cal Mode.

A1 FRAME BYTE NO.	PARAMETER
11	Reflector 2, Warm Cal. Position, MSP, First Reading
12	Reflector 2, Warm Cal. Position, LSP, First Reading
13	Reflector 1, Warm Cal. Position, MSP, Second Reading
14	Reflector 1, Warm Cal. Position, LSP, Second Reading
15	Reflector 2, Warm Cal. Position, MSP, Second Reading
16	Reflector 2, Warm Cal. Position, LSP, Second Reading
17	Warm Cal. Position, Channel 3, MSP
18	Warm Cal. Position, Channel 3, LSP
19	Warm Cal. Position, Channel 4, MSP
20	Warm Cal. Position, Channel 4, LSP
.	.
.	.
41	Warm Cal. Position, Channel 15, MSP
42	Warm Cal. Position, Channel 15, LSP
Bytes 9 through 42 are repeated 29 times for a total of 30 data sets.	
1029	Temp Sensor 1, MSP
1030	Temp Sensor 1, LSP
1031	Temp Sensor 2, MSP
1032	Temp Sensor 2, LSP
.	.
.	.
1117	Temp Sensor 45, MSP
1118	Temp Sensor 45, LSP
1119	Temp Sensor Reference Voltage, MSP
1120	Temp Sensor Reference Voltage, LSP
See Notes from Figure 18.3-7	

Figure 18.3-8. AMSU-A1 Digital "A" Data Format - Warm Cal Mode (Continued).

A1 FRAME BYTE NO.	PARAMETER
1-3	Sync. Sequence (FF Hex)
4	Unit Identification and Serial Number
5	Digital Housekeeping Data 1
6	Digital Housekeeping Data 2
7	Digital Housekeeping Data 3
8	Digital Housekeeping Data 4
9	Reflector 1, Cold Cal. Position, MSP, First Reading
10	Reflector 1, Cold Cal. Position, LSP, First Reading
11	Reflector 2, Cold Cal. Position, MSP, First Reading
12	Reflector 2, Cold Cal. Position, LSP, First Reading
13	Reflector 1, Cold Cal. Position, MSP, Second Reading
14	Reflector 1, Cold Cal. Position, LSP, Second Reading
15	Reflector 2, Cold Cal. Position, MSP, Second Reading

Figure 18.3-9. AMSU-A1 Digital "A" Data Format - Cold Cal Mode.

A1 FRAME BYTE NO.	PARAMETER
16	Reflector 2, Cold Cal. Position, LSP, Second Reading
17	Cold Cal. Position, Channel 3, MSP
18	Cold Cal. Position, Channel 3, LSP
19	Cold Cal. Position, Channel 4, MSP
20	Cold Cal. Position, Channel 4, LSP
.	.
.	.
41	Cold Cal. Position, Channel 15, MSP
42	Cold Cal. Position, Channel 15, LSP
Bytes 9 through 42 are repeated 29 times for a total of 30 data sets.	
1029	Temp Sensor 1, MSP
1030	Temp Sensor 1, LSP
1031	Temp Sensor 2, MSP
1032	Temp Sensor 2, LSP
.	.
.	.
1117	Temp Sensor 45, MSP
1118	Temp Sensor 45, LSP
1119	Temp Sensor Reference Voltage, MSP
1120	Temp Sensor Reference Voltage, LSP
See Notes from Figure 18.3-7	

Figure 18.3-9. AMSU-A1 Digital "A" Data Format - Cold Cal Mode (Continued).

A1 FRAME BYTE NO.	PARAMETER
1-3	Sync. Sequence (FF Hex)
4	Unit Identification and Serial Number
5	Digital Housekeeping Data 1
6	Digital Housekeeping Data 2
7	Digital Housekeeping Data 3
8	Digital Housekeeping Data 4
9	Reflector 1, Position 15, MSP, First Reading
10	Reflector 1, Position 15, LSP, First Reading
11	Reflector 2, Position 15, MSP, First Reading
12	Reflector 2, Position 15, LSP, First Reading
13	Reflector 1, Position 15, MSP, Second Reading
14	Reflector 1, Position 15, LSP, Second Reading
15	Reflector 2, Position 15, MSP, Second Reading
16	Reflector 2, Position 15, LSP, Second Reading
17	Nadir Position, Channel 3, MSP
18	Nadir Position, Channel 3, LSP
19	Nadir Position, Channel 4, MSP
20	Nadir Position, Channel 4, LSP

Figure 18.3-10. AMSU-A1 Digital "A" Data Format - Nadir Mode.

A1 FRAME BYTE NO.	PARAMETER
.	.
.	.
41	Nadir Position, Channel 15, MSP
42	Nadir Position, Channel 15, LSP
Bytes 9 through 42 are repeated 29 times for a total of 30 data sets.	
1029	Temp Sensor 1, MSP
1030	Temp Sensor 1, LSP
1031	Temp Sensor 2, MSP
1032	Temp Sensor 2, LSP
.	.
.	.
1117	Temp Sensor 45, MSP
1118	Temp Sensor 45, LSP
1119	Temp Sensor Reference Voltage, MSP
1120	Temp Sensor Reference Voltage, LSP
See Notes from Figure 18.3-7	

Figure 18.3-10. AMSU-A1 Digital "A" Data Format - Nadir Mode. (Continued).

DIGITAL BIT	HOUSEKEEPING DATA, BYTE NUMBER 1 DESCRIPTION
0	0
1	Full Scan Mode. 0 = Not Full Scan, 1 = Full Scan
2	Warm Cal Mode. 0 = Not in Warm Cal, 1 = Warm Cal
3	Cold Cal Mode. 0 = Not in Cold Cal, 1 = Cold Cal
4	Nadir Mode. 0 = Not in Nadir, 1 = Nadir
5	Cold Cal Position, LSB
6	Cold Cal Position, MSB
7	0
DIGITAL BIT	**HOUSEKEEPING DATA, BYTE NUMBER 2 DESCRIPTION**
0	0.
1	Scanner A1-1 Power 0 = Off, 1 = On.
2	Scanner A1-2 Power 0 = Off, 1 = On.
3	PLL Power 0 = Redundant, 1 = Primary.
4	Survival Heater Power 0 = Off, 1 = On.
5	0.
6	0.
7	0.

Figure 18.3-11. AMSU-A1 Data Word Description.

DIGITAL BIT	HOUSEKEEPING DATA, BYTE NUMBER 3 DESCRIPTION
0	0.
1	0.
2	0.
3	0.
4	0.
5	0.
6	0.
7	0.

DIGITAL BIT	HOUSEKEEPING DATA, BYTE NUMBER 4* DESCRIPTION
0	0.
1	0.
2	0.
3	0.
4	0.
5	0.
6	0.
7	0.

AMSU A1 NUMBER	TEMP SENSOR ASSIGNMENTS LOCATION
1	Scan Motor A1-1
2	Scan Motor A1-2
3	Feedhorn A1-1
4	Feedhorn A1-2
5	RF Mux A1-1
6	RF Mux A1-2
7	Local Oscillator Channel 3
8	Local Oscillator Channel 4
9	Local Oscillator Channel 5
10	Local Oscillator Channel 6
11	Local Oscillator Channel 7
12	Local Oscillator Channel 8
13	PLL LO #1 Channels 9 through 14
14	PLL LO #2 Channels 9 through 14
15	PLLO (Reference Oscillator)
16	Local Oscillator Channel 15
17	Mixer/IF Amplifier Channel 3
18	Mixer/IF Amplifier Channel 4
19	Mixer/IF Amplifier Channel 5
20	Mixer/IF Amplifier Channel 6
21	Mixer/IF Amplifier Channel 7
22	Mixer/IF Amplifier Channel 8
23	Mixer/IF Amplifier Channel 9/14
24	Mixer/IF Amplifier Channel 15
25	IF Amplifier Channel 11/14

Figure 18.3-11. AMSU-A1 Data Word Description (Continued).

AMSU A1 NUMBER	TEMP SENSOR ASSIGNMENTS LOCATION
26	IF Amplifier Channel 9
27	IF Amplifier Channel 10
28	IF Amplifier Channel 11
29	IF Amplifier Channel 12
30	IF Amplifier Channel 13
31	IF Amplifier Channel 14
32	DC/DC Converter
33	RF Shelf A1-1
34	RF Shelf A1-2
35	Detector/Preamplifier Assembly
36	A1-1 Warm load 1
37	A1-1 Warm load 2
38	A1-1 Warm load 3
39	A1-1 Warm load 4
40	A1-1 Warm load center
41	A1-2 Warm load 1
42	A1-2 Warm load 2
43	A1-2 Warm load 3
44	A1-2 Warm load 4
45	A1-2 Warm load center
Unit Number	**Identification No. (Binary)**
Engineering Model Module A-1	00000001
Proto Flight Model Module A-1	00000101
Flight Model 1 Module A-1	00001001
Flight Model 2 Module A-1	00001101

Figure 18.3-11. AMSU-A1 Data Word Description (Continued).

18.3.6 COMMANDS

The complete set of commands with mnemonics and description of effects for the AMSU-A1 module is shown in Figure 18.3-12. The AMSU-A1 is provided four pulse discrete and ten level discrete commands, for a total of 14 commands.

COMMAND	MNEMONIC	DESCRIPTION
Direct Commands - Pulse Discrete		
MODULE POWER DISCONNECT	A1MPD	A negative pulse used to pulse the "off" coil of the latching relay which controls the 28 Vdc regulated and 28 Vdc pulsed power. Immediately removes all 28 Vdc excitation from the instrument. Antenna position is unknown. State of power control relays unchanged. Highest priority command.
MODULE POWER CONNECT	A1MPC	A negative pulse used to pulse the "on" coil of the latching relay which controls the 28 Vdc regulated and 28 Vdc pulsed power.
SURVIVAL HEATER POWER OFF	A1HPF	A negative pulse used to pulse the "off" coil of the latching relay which controls the survival heaters. (Controlled solely by spacecraft).

Figure 18.3-12. AMSU-A1 Operational Commands.

COMMAND	MNEMONIC	DESCRIPTION
SURVIVAL HEATER POWER ON	A1HPN	A negative pulse used to pulse the "on" coil of the latching relay which controls the survival heaters. (Controlled solely by spacecraft).
Microprocessor Processed Commands - Level Discrete (0 = false = 10 Vdc, 1 = true = 0 Vdc)		
MODULE TOTALLY OFF	A1MTF/N	Position antennas to Warm Cal position. Turn both scanner and compensation motor power to off. Remove power to both the 28 Vdc regulated and pulsed busses. 0 = Not off, 1 = off. NOTE: If the MODULE POWER DISCONNECT command is commanded to the OFF state and then the MODULE TOTALLY OFF command is commanded to the OFF state, then the MODULE TOTALLY OFF command will be ignored.
SCANNER A1-1 POWER (ON/OFF)	A1S1N/F	Commands the control of power to Scanner A1-1. 0 = Off, 1 = On.
SCANNER A1-2 POWER (ON/OFF)	A1S2N/F	Commands the control of power to Scanner A1-2. 0 = Off, 1 = On.
WARM CAL*	A1WCN/F	0 = No action, 1 = Command both - AMSU-A1 antennas to Warm Cal position.
COLD CAL*	A1CCN/F	0 = No action, 1 = Command both - AMSU-A1 antennas to Cold Cal position.
NADIR*	A1NAN/F	0 = No action, 1 = Command both antennas to nadir position.
FULL SCAN*	A1FSN/F	0 = No action, 1 = Full scan mode.
PHASE LOCK LOOP POWER	A1PLP/R	1 = Turn primary PLL power On, 0 = Turn redundant PLL power on.
Cold Cal Position MSB	A1CMO/1	MSB LSB 0 0 Position 1 6.6670 From -Z Axis
Cold Cal Position LSB	A1CLO/1	0 1 Position 2 8.3330 From -Z Axis 1 0 Position 3 9.9990 From -Z Axis 1 1 Position 4 13.3320 From -Z Axis

*Order of execution priority: Full Scan Mode, Warm Cal Mode, Cold Cal Mode, and Nadir Mode

Figure 18.3-12. AMSU-A1 Operational Commands (Continued).

18.3.6.1 Safe State

Safe state is defined as having a known spacecraft condition, and having the instrument at minimum power and a predetermined configuration. The command sequence to take the instrument to safe state is:

1. Send A1MTF command to OFF (logic 1)

2. Send A1HPN command.

18.3.6.2 Power Down Mnemonic Sequence

Two power down conditions exist: emergency and normal sequences. Emergency off is defined as the instrument at zero power and an undetermined instrument configuration. The command sequence for an emergency off condition is:

1. Send A1MPD command.

Normal turn-off is defined as the instrument at zero power and a predetermined instrument configuration. The command sequence for a normal turn-off is:

1. Send A1MTF command to OFF (logic 1)

2. Send A1HPF command.

18.3.6.3 Power Up Mnemonic Sequence

Two power up conditions exist: routine and from an emergency off. The routine power up sequence also covers powering up from a safe state condition. The command sequence for a routine power up is:

1. Send A1HPN command (per spacecraft launch stored command table within 15 minutes of handover)
2. If A1-1 and A1-2 RF shelf temperatures are >+8°C, then proceed,
3. Send A1HPF command
4. Send A1MTF command to NOT OFF (logic 0)
5. Send A1MPC command. Read local oscillator temperatures (Digital A)
6. Send A1CMO command to 0 (logic 0)
7. Send A1CLO command to 0 (logic 0)
8. Send A1FSN command to ON (logic 1).
9. Send A1S1N command to Primary (logic 1)
10. Send A1S2N command to ON (logic 1)
11. Send A1PLP command to Primary (logic 1).
12. Delay 2 minutes
13. If local oscillator temperatures at A1MPC (step 5) are <+5°C, wait until local oscillator temperatures are ≥+5°C, then go to step 15
14. If local oscillator temperatures at A1MPC are ≥+5°C, skip steps 15-19 (turn-on is complete)
15. Send A1MTF command to OFF (logic 1)
16. Delay 20 seconds
17. Send A1MTF command to NOT OFF (logic 0)
18. Send A1MPC command
19. Repeat steps 5 through 11, as appropriate.

To turn on the AMSU-A1 modules after an emergency power down, the following command sequence is used:

1. Send A1MTF command to OFF (logic 1)

2. Send A1MPC command

3. Perform normal turn-on as above.

18.3.7 MIRP PROCESSING

MIRP Processing is not applicable to the AMSU-A1 instrument.

18.3.8 POWER INPUT AND PROFILE

The power requirements for the AMSU-A1 module for all modes are shown in Figure 18.3-13.

OPERATIONAL MODE	INPUT POWER, WATTS	
	AMSU-A1	AMSU-A2
OFF	0	0
SAFE STATE/STANDBY	38	15
NORMAL	73.8	28.6
WARM CAL	73.8	28.6
COLD CAL	73.8	28.6
NADIR	73.8	28.6

Figure 18.3-13. AMSU-A Power Inputs Profile.

18.3.9 ACTIVATION AND EVALUATION (A&E) PROCEDURE AND TIMELINE

To activate the AMSU-A1 instrument, the normal power-up command sequence (Section 18.3.6.3) is completed while monitoring critical temperature telemetry. The first step is to turn on the survival heater power and maintain heater power until the RF shelf temperatures exceed +8°C. The heater power is then turned off and normal turn-on proceeds.

Power-up steps 3 through 11 are completed to power up the AMSU-A1 instrument. This is followed by a two minute delay. The local oscillator temperature data is monitored during this process to determine if the local oscillator temperature was ≥+5°C at the time the A1MPC command was sent. If the local oscillator temperature is ≥+5°C at this step, the Digital "B" telemetry is checked to verify instrument status. With successful verification of instrument status, the instrument is in the normal operating mode.

If the local oscillator temperature is <+5°C at the time the A1MPC command was sent, the module is turned off. The operator waits 20 seconds, then repowers and reconnects the instrument to repeat the power-up cycle. Steps 3 through 11 are completed again, followed by another two minute delay and a rechecking of the module telemetry. This cycle is repeated until the local oscillator temperature is ≥5°C. At that time, the instrument Digital "B" telemetry is checked to verify instrument status, thus completing the activation process.

18.3.10 OPERATIONAL MODES

The AMSU-A1 operational modes are: safe state/standby, normal/in-orbit, warm calibration, cold calibration, nadir, emergency off, and normal turn off. The instrument status for each operation mode is shown in Figure 18.3-14.

18.3.11 CALIBRATION REQUIREMENTS

There are no specific on-orbit calibration procedures for AMSU-A1. The instrument is automatically calibrated each data cycle by measuring both warm and cold calibration targets.

Operation Modes	AMSU-A1 INSTRUMENT STATUS									Scanner Position
	INPUT POWER						OUTPUT SIGNALS			
	Mainload Bus	Pulse Load Bus		Analog Temp TLM Data Bus	±10 Volt Interface B Bus	Analog Temp TLM Data Bus	Digital A Data	Digital B Data	Analog TLM Data	
		Heater	Ant. Drive							
Prior to Launch Delivery	OFF	OFF	OFF	OFF	OFF	NO	NO	NO	NO	Warm Cal Position
Safe State/ Standby Mode	OFF	ON	OFF	ON	ON	YES	NO	Limited Refer to UIIS	NO	Warm Cal Position
Normal/In-Orbit Mode	ON	ON	ON	ON	ON	YES	YES. Refer to Figure 18.3-7	YES	YES	Full Scan/In-Orbit
Unique Operation Mode										
a. Warm Cal Mode	ON	ON	ON	ON	ON	YES	YES. Refer to Figure 18.3-8	YES	YES	Scanner at Warm Cal
b. Cold Cal Mode	ON	ON	ON	ON	ON	YES	YES. Refer to Figure 18.3-9	YES	YES	Scanner at Cold Cal
c. Nadir Mode	ON	ON	ON	ON	ON	YES	YES. Refer to Figure 18.3-10	YES	YES	Scanner at Nadir Position
Emergency Off	OFF		OFF				NO	NO	NO	Unknown
Normal Turn Off	OFF	OFF	OFF	ON	ON	YES	NO	NO	NO	Warm Cal Position

Figure 18.3-14. Instrument Status vs. Operation Modes.

18.3.12 ROUTINE COMMAND REQUIREMENTS

During normal mode, there are no specific command requirements. However, there are adjustments that can be commanded to modify the phase lock loop for AMSU-A1 and to select a cold calibration position different from that selected during turn-on. In addition, three unique operating modes can be commanded: warm calibration mode, cold calibration mode and nadir mode.

18.3.12.1 Redundant Phase Lock Loop Operation

To change operation of the phase lock loop from primary to redundant, the following command sequence is used:

1. Send A1PLR command to Redundant (logic 0).

18.3.12.2 Selection of Cold Calibration Position

To select a cold calibration position different from the primary position used during power-up, the following command sequence is employed:

1. Send A1FSF command to NO ACTION (logic 0)
2. Send A1WCF command to NO ACTION (logic 0)
3. Send A1CCN command to ON (logic 0)
4. Wait at least 18 seconds
5. Send A1CM0/1 and A1CL0/1 command (see Figures 18.3-12 for specific cold calibration position combinations for AMSU-A1)
6. Wait at least 18 seconds
7. Send A1CCF command to NO ACTION (logic 0)
8. Send A1FSN command to ON (logic 1).

18.3.12.3 Warm Calibration Mode

To enter the warm calibration mode from normal mode, enter the following command sequence:

1. Send A1FSF command to NO ACTION (logic 0)
2. Send A1WCN command to ON (logic 1)

18.3.12.4 Cold Calibration Mode

To send the AMSU-A1 module to cold calibration mode from normal mode, enter the following command sequence:

1. Send A1FSF command to NO ACTION (logic 0)
2. Send A1WCF command to NO ACTION (logic 0)
3. Send A1CCN command to ON (logic 1)

18.3.12.5 Nadir Position Mode

To send the AMSU-A1 module to the nadir position mode from normal mode, enter the following command sequence:

1. Send A1FSF command to NO ACTION (logic 0)
2. Send A1WCF command to NO ACTION (logic 0)
3. Send A1CCF command to NO ACTION (logic 0)

4. Send A1NAN command to ON (logic 1)

18.3.13 EVALUATION OF NOMINAL PERFORMANCE AND TREND REQUIREMENTS

Nominal performance of the AMSU-A1 modules is determined by the Analog and Digital "A" voltage, current and temperature telemetry falling within the acceptable limits. The AMSU-A1 Analog and applicable Digital "A" telemetry limits are shown in Figures 18.3-5 and 18.3-15, respectively.

18.3.14 CONSTRAINTS

18.3.14.1 Pre-Launch and Launch Constraints

The AMSU-A1 module will be in the MODULE TOTALLY OFF state prior to delivery and during launch. That means that all antennas will be at the warm calibration position, power to all scanners will be in the OFF state, and power to the +28Vdc MLB and PLB will be in the OFF state.

18.3.14.2 Initial Turn-On Constraints

The constraints prior to initial turn-on are:

1. The temperature of the receiver shelf must be within -20°C to +40°C

2. Survival Heater Power must be OFF.

18.3.14.3 Operational Constraints

The only operational constraints are those defined by the Analog and applicable Digital "A" telemetry, as described in Section 18.3.12.

Temperature Sensor #	Description	Indicator Limit Deg. C	Instrument Within Spec (low) C	Instrument Within Spec (high) C	Indicator Limit Deg. C
1	Scan Motor A1-1	-10.0	-2.0	38.0	48.0
2	Scan Motor A1-1	-10.0	-2.0	38.0	48.0
3	Feed Horn A1-1	-10.0	-2.0	38.0	48.0
4	Feed Horn A1-2	-10.0	-2.0	38.0	48.0
5	RF Mux A1-1	-10.0	-2.0	38.0	48.0
6	RF Mux A1-2	-10.0	-2.0	38.0	48.0
7	Local Oscillator Channel 3	-10.0	-2.0	38.0	48.0
8	Local Oscillator Channel 4	-10.0	-2.0	38.0	48.0
9	Local Oscillator Channel 5	-10.0	-2.0	38.0	48.0
10	Local Oscillator Channel 6	-10.0	-2.0	38.0	48.0
11	Local Oscillator Channel 7	-10.0	-2.0	38.0	48.0
12	Local Oscillator Channel 8	-10.0	-2.0	38.0	48.0
13	Local Oscillator Channel 15	-10.0	-2.0	38.0	48.0
14	PLLO #2 Channels 9 through 14	-10.0	-2.0	38.0	48.0
15	PLLO #1 Channels 9 through 14	-10.0	-2.0	38.0	48.0
16	PLLO Reference Oscillator	-10.0	-2.0	38.0	48.0
17	Mixer IF Amplifier Channel 3	-10.0	-2.0	38.0	48.0
18	Mixer IF Amplifier Channel 4	-10.0	-2.0	38.0	48.0
19	Mixer IF Amplifier Channel 5	-10.0	-2.0	38.0	48.0
20	Mixer IF Amplifier Channel 6	-10.0	-2.0	38.0	48.0
21	Mixer IF Amplifier Channel 7	-10.0	-2.0	38.0	48.0
22	Mixer IF Amplifier Channel 8	-10.0	-2.0	38.0	48.0
23	Mixer IF Amplifier Channel 9-14	-10.0	-2.0	38.0	48.0
24	Mixer IF Amplifier Channel 15	-10.0	-2.0	38.0	48.0
25	IF Amplifier Channel 11 thru 14	-10.0	-2.0	38.0	48.0
26	IF Amplifier Channel 9	-10.0	-2.0	38.0	48.0
27	IF Amplifier Channel 10	-10.0	-2.0	38.0	48.0
28	IF Amplifier Channel 11	-10.0	-2.0	38.0	48.0
29	IF Amplifier Channel 12	-10.0	-2.0	38.0	48.0
30	IF Amplifier Channel 13	-10.0	-2.0	38.0	48.0
31	IF Amplifier Channel 14	-10.0	-2.0	38.0	48.0
32	DC/DC Converter	-10.0	-2.0	38.0	48.0
33	RF Shelf A1-1	-10.0	+8.0	28.0	48.0
34	RF Shelf A1-2	-10.0	+8.0	28.0	48.0
35	Detector/Pre-amp Assembly	-10.0	-2.0	38.0	48.0
36	A1-1 Warm Load 1	-15.0	-2.0	38.0	40.0
37	A1-1 Warm Load 2	-15.0	-2.0	38.0	40.0
38	A1-1 Warm Load 3	-15.0	-2.0	38.0	40.0
39	A1-1 Warm Load 4	-15.0	-2.0	38.0	40.0
40	A1-1 Warm Load Center	-15.0	-2.0	38.0	40.0
41	A1-2 Warm Load 1	-15.0	-2.0	38.0	40.0
42	A1-2 Warm Load 2	-15.0	-2.0	38.0	40.0
43	A1-2 Warm Load 3	-15.0	-2.0	38.0	40.0
44	A1-2 Warm Load 4	-15.0	-2.0	38.0	40.0
45	A1-2 Warm Load Center	-15.0	-2.0	38.0	40.0

Figure 18.3-15. AMSU-A1 Nominal Temperature Ranges.

18.4 ADVANCED MICROWAVE SOUNDING UNIT-A2 (AMSU-A2)

18.4 ADVANCED MICROWAVE SOUNDING UNIT-A2 (AMSU-A2)

18.4.1 FUNCTIONAL DESCRIPTION

The Advanced Microwave Sounding Unit-A2 (AMSU-A2) space-flight instrument is a multi-channel microwave radiometer that will be used for measuring global atmospheric temperature profiles from the Advanced TIROS-N (ATN) spacecraft. In addition to temperature profiles, the AMSU-A2 system will provide information on atmospheric water in all of its forms with the exception of small ice particles, which are transparent at microwave frequencies.

AMSU-A2 is a cross-track, line-scanned instrument designed to measure scene radiance's in 2 discrete frequency channels which permit the calculation of the vertical temperature profile from about 3 millibars (45 km) pressure height to the Earth's surface. At each channel frequency, the antenna beamwidth is a constant 3.3° (at the half power point). Thirty contiguous scene resolution cells are sampled in a stepped-scan fashion every eight seconds, each scan covering 50° on each side of the subsatellite path. These scan patterns and geometric resolution translate to a 50 km diameter cell at nadir and a 2,343 km swath width from the 870 km nominal orbital altitude.

18.4.2 SYSTEM DESCRIPTION

18.4.2.1 General

The AMSU-A system is implemented in two separate modules. Hardware for the two lowest frequencies in one module (AMSU-A2) and that for the remaining thirteen frequencies in the second module (AMSU-A1). This arrangement puts the two lower atmospheric moisture viewing channels into one module and the oxygen absorption channels into a second common module to ensure commonalty of viewing angle independent of any module and/or spacecraft misalignment due to structural or thermal distortions.

AMSU-A2 contains the two lower frequencies (K-band channel 1 and Ka-band channel 2), and the associated scanning, calibration, processing, and power control hardware and circuitry. This module is used to study atmospheric water in all of its forms with the exception of small ice particles. The radiometer characteristics of the AMSU-A2 channels are summarized in Figure 18.4-1.

Channel Number	Center Frequency	No. of Pass Bands	Bandwidth (MHz)	Center Frequency Stability (MHz)	Temperature Sensitivity (K) NEΔT	Calibration Accuracy (K)	Beam Diameter (degrees)	Polarization at NADIR
1	23800 MHz	1	270	10	0.3	2	3.3	V
2	31400 MHz	1	180	10	0.3	2	3.3	V

Figure 18.4-1. AMSU-A Channel Descriptions.

18.4.2.2 Antenna/Drive/Calibration Subsystem

The Antenna/Drive/Calibration subsystem consists of a conical corrugated horn-fed shrouded reflector, subreflector, multiplexer, closed-loop antenna scan drive assembly and closed-loop path calibration assembly. The shrouded reflector is rotated once very scan line (8 sec) for:

(1) each of 30 earth viewing scene observations,

(2) a view of the cosmic background (~3K), and

(3) a view of a warm calibration load (~300K).

During the rotation cycle, the shroud prevents solar reflections from interacting with the warm load and also ensures maximum couplings of the source radiation to the antenna feed. Thus a complete end-to-end inflight calibration is achieved in a through-the-antenna method, thereby providing maximum inflight calibration accuracy. The accuracy of the warm calibration accuracy. The accuracy of the warm calibration load brightness temperature is better than ±0.2K. The closed loop antenna scan drive provide beam pointing accuracy within ±0.2°. A resolver in the antenna scan drive provides beam pointing accuracy within ±0.2°. A resolver in the antenna drive assembly provides antenna beam position information.

18.4.2.3 Receiver Subsystem

All AMSU-A2 receiver channels are of the total power superheterodyne type. Each channel provides RF to IF conversion, IF amplification, filtering of the frequency bands, detection and video amplification. An isolator precedes the RF to IF conversion to prevent the possibility of any local oscillator power leaking through the antenna and being reflected back into the receiver.

The AMSU-A2 receiver uses fundamentally pumped double balanced mixers and nvar high-Q cavity stabilized local oscillators for all channels.

18.4.2.4 Signal Processor Subsystem

The signal processor subsystem consists of a video processor, analog to digital converter, microprocessor, memory, FIFO, timing and control circuitry, DC/DC converters and spacecraft interface circuitry. All channels of radiometric data, antenna position data, thermometric temperature of the warm calibration load and critical components, and digital and analog housekeeping data are provided to the spacecraft telemetry system via spacecraft interface circuits.

18.4.2.5 Structural/Thermal Subsystem

A modularized structural/packaging configuration incorporating passive thermal control is used. This modularity provides accessibility for ease of fabrication, assembly and test of the various subsystems independently of each other. The mechanical/structural subassembly uses a box-type structure with honeycomb panels to integrate the various subsystems. The enclosure and internal structure are designed to eliminate RFI/EMI produced by the spacecraft's high power telemetry transmitters. The AMSU-A utilizes second surface mirrors, second surface silvered teflon tape and multilayered insulation for passive thermal control.

18.4.3 ELECTRICAL AND MECHANICAL BLOCK DIAGRAMS

The AMSU-A2 module consists of four major subsystems: the antenna/drive/calibration subsystem, the receiver subsystem, the signal processing subsystem, and the structural/thermal subsystem. Figure 18.4-2 are the electrical block diagram for AMSU-A2, and identifies the three major electrical subsystems.

Figure 18.4-3 shows the mechanical configuration of the module. The thermal control of the configuration is passive, utilizing gold kapton, aluminum kapton, silver teflon, and multilayer insulation (MLI) on the various instrument surfaces to control temperature.

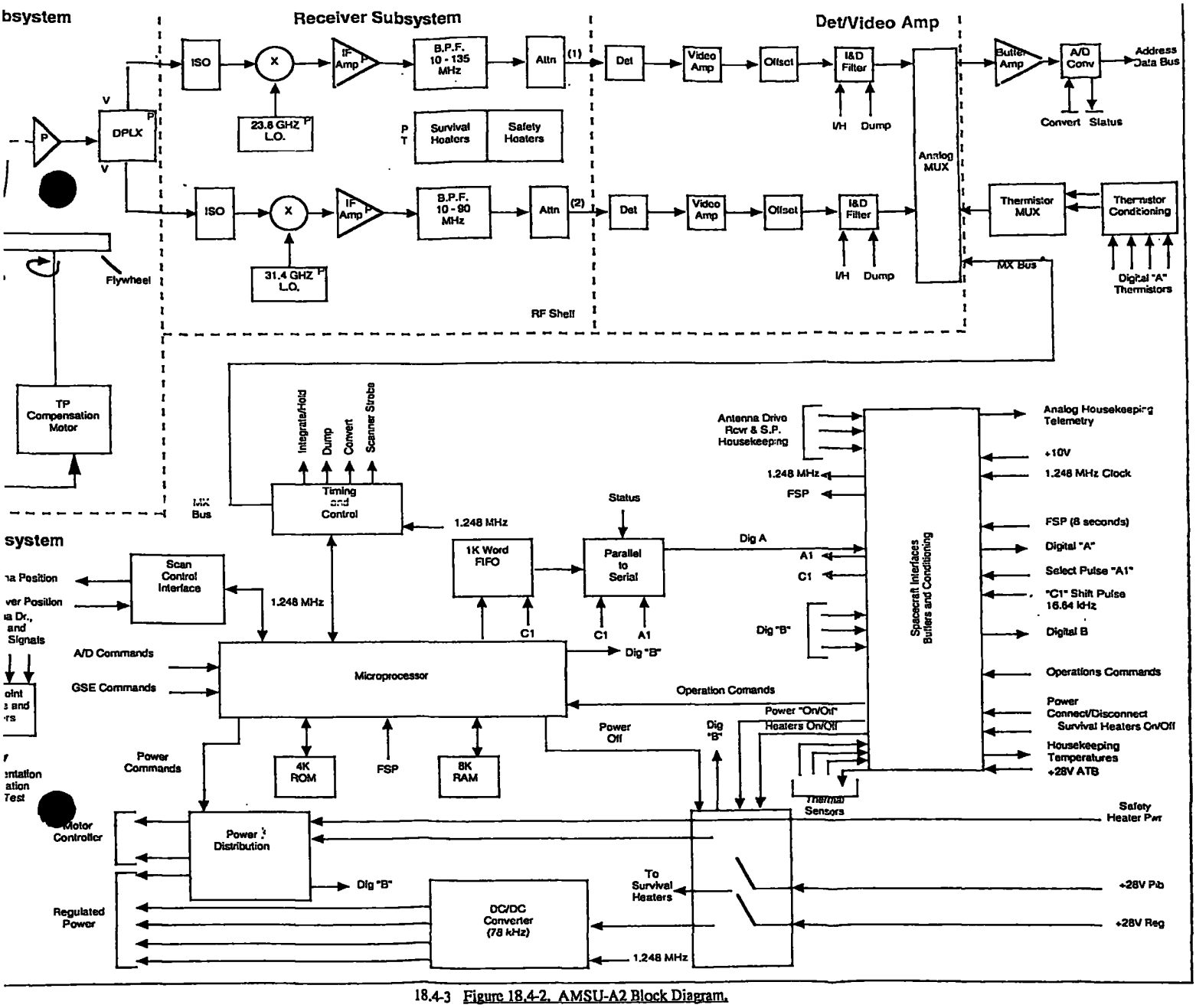

18.4-3 Figure 18.4-2. AMSU-A2 Block Diagram.

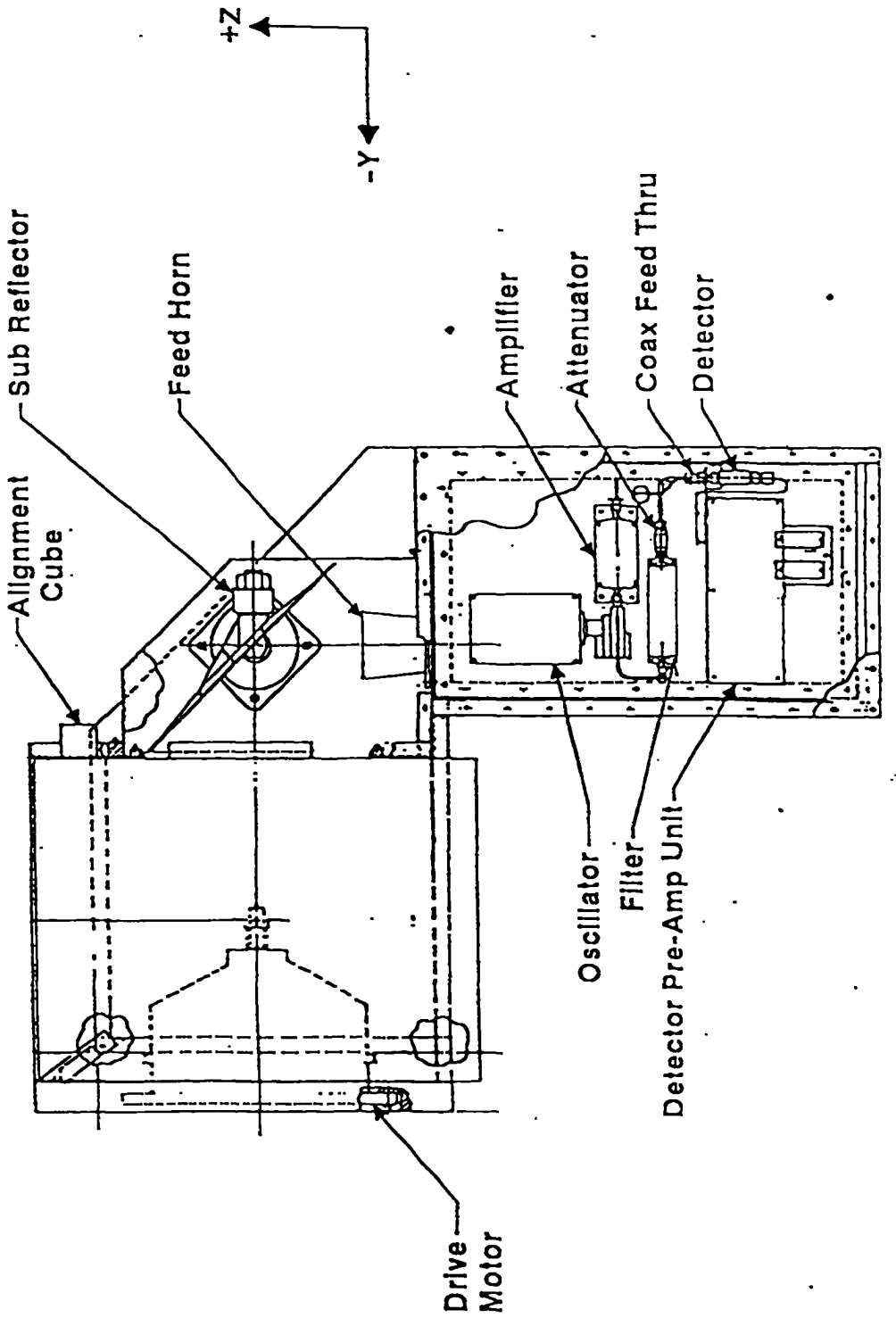

Figure 18.4-3. AMSU-A2 Mechanical Layout.

18.4.4 INTERFACE TIMING

The interface timing for the AMSU-A2 module is shown in Figure 18.4-4.

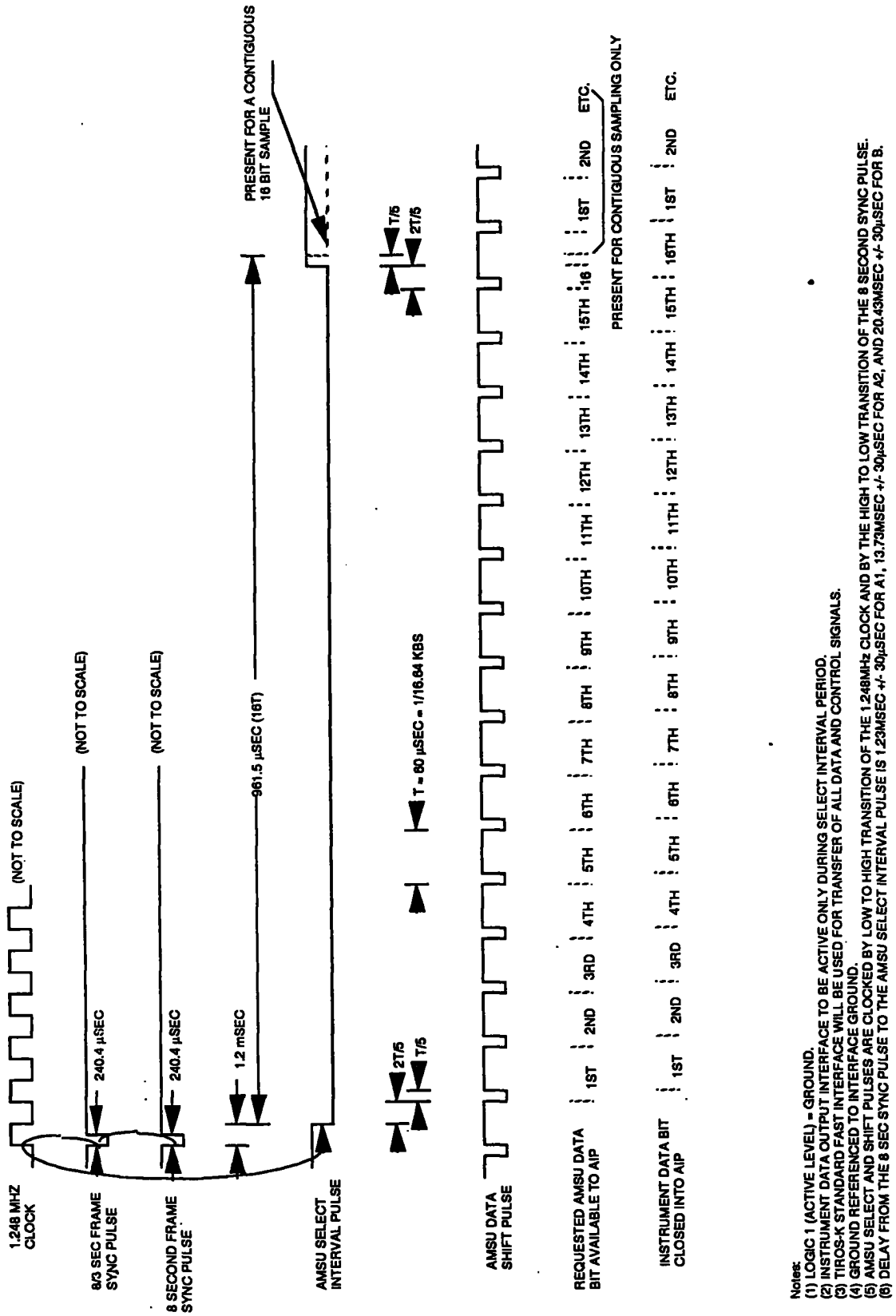

Notes:
(1) LOGIC 1 (ACTIVE LEVEL) = GROUND.
(2) INSTRUMENT DATA OUTPUT INTERFACE TO BE ACTIVE ONLY DURING SELECT INTERVAL PERIOD.
(3) TIROS-K STANDARD FAST INTERFACE WILL BE USED FOR TRANSFER OF ALL DATA AND CONTROL SIGNALS.
(4) GROUND REFERENCED TO INTERFACE GROUND.
(5) AMSU SELECT AND SHIFT PULSES ARE CLOCKED BY LOW TO HIGH TRANSITION OF THE 1.248MHz CLOCK AND BY THE HIGH TO LOW TRANSITION OF THE 8 SECOND SYNC PULSE.
(6) DELAY FROM THE 8 SEC SYNC PULSE TO THE AMSU SELECT INTERVAL PULSE IS 1.23MSEC +/- 30µSEC FOR A1, 13.73MSEC +/- 30µSEC FOR A2, AND 20.43MSEC +/- 30µSEC FOR B.

Figure 18.4-4. AMSU-A2 Data Interface Timing.

18.4.5 INSTRUMENT TELEMETRY

18.4.5.1 Analog Telemetry

The AMSU-A2 analog telemetry consists primarily of temperatures of critical subsystems, motor currents, and critical voltages for operation of the instrument. AMSU-A2 has 15 analog telemetry points, which are shown in Figure 18.4-5.

No.	Telemetry Point Name	Range (Red Limit)	Range (Yellow Limit)	Ch# (mnf#)
1	Scanner Motor Temperature*, Deg. C	-30 to +66	-20 to +58	451(67)
2	Compensator Motor Temperature*, Deg. C	-30 to +66	-20 to +58	452(68)
3	RF Shelf Temperature*, Deg. C	-30 to +66	+6 to +28	453(69)
4	Warm Load A2*, Deg. C	-30 to +66	-20 to +58	455(71)
5	Compensator Motor Current (Average)	50 to 150mA	N/A	459(75)
6	Antenna Drive Motor Current (Average)	50 to 150mA	N/A	460(76)
7	+15 VDC (Signal Processing)	14 to 16V	N/A	461(77)
8	+15 VDC (Antenna Drive)	13.5 to 18V	N/A	463(79)
9	-15 VDC (Signal Processing)	-16 to -14V	N/A	466(82)
10	-15 VDC (Antenna Drive)	-16.5 to -13.5V	N/A	468(84)
11	+8 VDC (Receiver)	7 to 9V	N/A	469(85)
12	+5 VDC (Signal Processing)	4 to 6V	N/A	471(87)
13	+5 VDC (Antenna Drive)	4 to 6V	N/A	474(90)
14	GDO Voltage Ch 1 (23.8 GHz)	7 to 9V	N/A	476(92)
15	GDO Voltage Ch 2 (31.4 GHz)	6 to 8V	N/A	477(93)

*Powered by the +28V Analog TLM Bus

Figure 18.4-5. AMSU-A2 Analog Telemetry.

18.4.5.2 Digital "B" Telemetry

The AMSU-A2 Digital "B" telemetry consists of instrument housekeeping data. AMSU-A2 has ten Digital "B" telemetry points, identified in Figure 18.4-6.

No.	Telemetry Point Name	State* Logic "1"	State* Logic "0"	Ch#
1	Scanner Power ON/OFF**	ON	OFF	31
2	Antenna in Warm Cal Position YES/NO	YES	NO	55
3	Antenna in Cold Cal Position YES/NO	YES	NO	65
4	Antenna in Nadir Position YES/NO	YES	NO	93
5	Full Scan YES/NO	YES	NO	94
6	Module Power**	CONNECT	DISCONNECT	96
7	Compensator Motor ON/OFF**	ON	OFF	99
8	Survival Heater ON/OFF**	ON	OFF	102
9	Cold Cal Position MSB	See Note (1)	See Note (1)	107
10	Cold Cal Position LSB	See Note (1)	See Note (1)	115

*Logic "1" is a "Low Voltage" State
** Must correctly indicate power status with instrument power OFF.

Figure 18.4-6. Digital "B" Telemetry for AMSU-A2.

NOTE (1):	MSB	LSB	
	0	0	6.667° from -Z
	0	1	8.333° from -Z
	1	0	9.999° from -Z
	1	1	13.332° from -Z

NOTE (2): If telemetry points 2, 3, 4 & 5 all indicate Logic "0", the instrument is operating with the antenna in warm cal position.

Figure 18.4-6. Digital "B" Telemetry for AMSU-A2 (Continued).

18.4.5.3 Digital "A" Telemetry

The AMSU-A2 Digital "A" telemetry incorporates all of the radiometric data taken during one scan. It also includes the data from the on-orbit calibrations. The AMSU-A2 has 316 Digital "A" telemetry points, as described in Figure 18.4-7, in the Full Scan Mode. Figures 18.4-8 through 18.4-10 identify the 288 telemetry points for each of the warm calibration, cold calibration and nadir modes, respectively. Figure 18.4-11 describes the AMSU-A2 data words for the digital housekeeping temperature sensor, and unit identification/serial number bytes.

A2 FRAME BYTE NO.	PARAMETER
1-3	Sync. Sequence (FF Hex)
4	Unit Identification and Serial Number
5	Digital Housekeeping Data 1
6	Digital Housekeeping Data 2
7	Digital Housekeeping Data 3
8	Digital Housekeeping Data 4
9	Reflector, Position 1, MSP, First reading
10	Reflector, Position 1, LSP, First reading
11	Reflector, Position 1, MSP, Second reading
12	Reflector, Position 1, LSP, Second reading
13	Scene Position 1, Channel 1, MSP
14	Scene Position 1, Channel 1, LSP
15	Scene Position 1, Channel 2, MSP
16	Scene Position 1, Channel 2, LSP
17	Reflector, Position 2, MSP, First reading
18	Reflector, Position 2, LSP, First reading
19	Reflector, Position 2, MSP, Second reading
20	Reflector, Position 2, LSP, Second reading
21	Scene Position 2, Channel 1, MSP
22	Scene Position 2, Channel 1, LSP
23	Scene Position 2, Channel 2, MSP
24	Scene Position 2, Channel 2, LSP
25	Reflector, Position 3, MSP, First reading
26	Reflector, Position 3, LSP, First reading
27	Reflector, Position 3, MSP, Second reading
28	Reflector, Position 3, LSP, Second reading
29	Scene Position 3, Channel 1, MSP
30	Scene Position 3, Channel 1, LSP

Figure 18.4-7. AMSU-A2 Digital "A" Data Format - Full Scan Mode.

A2 FRAME BYTE NO.	PARAMETER
.	.
.	.
247	Scene Position 30, Channel 2, MSP
248	Scene Position 30, Channel 2, LSP
249	Reflector, Cold Cal. Position, MSP, First reading
250	Reflector, Cold Cal. Position, LSP, First reading
251	Reflector, Cold Cal. Position, LSP, Second reading
252	Reflector, Cold Cal. Position, LSP, Second reading
253	Cold Calibration 1, Channel 1, MSP
254	Cold Calibration 1, Channel 1, LSP
255	Cold Calibration 1, Channel 2, MSP
256	Cold Calibration 1, Channel 2, LSP
257	Cold Calibration 2, Channel 1, MSP
258	Cold Calibration 2, Channel 1, LSP
259	Cold Calibration 2, Channel 2, MSP
260	Cold Calibration 2, Channel 2, LSP
261	Temp Sensor 1, MSP
262	Temp Sensor [1], LSP
263	Temp Sensor 2, MSP
264	Temp Sensor 2, LSP
.	.
.	.
297	Temp Sensor 19, MSP
298	Temp Sensor 19, LSP
299	Temp Sensor Reference Voltage, MSP
300	Temp Sensor Reference Voltage, LSP
301	Reflector Warm Cal. Position, MSP, First reading
302	Reflector Warm Cal. Position, LSP, First reading
303	Reflector Warm Cal. Position, MSP, Second reading
304	Reflector Warm Cal. Position, LSP, Second reading
305	Warm Calibration 1, Channel 1, MSP
306	Warm Calibration 1, Channel 1, LSP
307	Warm Calibration 1, Channel 2, MSP
308	Warm Calibration 1, Channel 2, LSP
309	Warm Calibration 2, Channel 1, MSP
310	Warm Calibration 2, Channel 1, LSP
311	Warm Calibration 2, Channel 2, MSP
312	Warm Calibration 2, Channel 2, LSP
313-315	Sync. Sequence (FF Hex)
316	Unit Identification and Serial Number
NOTE 1:	In the above table, the MSP is the most significant portion of a particular measurement while the LSP is the least significant portion of the particular measurement.

Figure 18.4-7. AMSU-A2 Digital "A" Data Format - Full Scan Mode (Continued).

A2 FRAME BYTE NO.	PARAMETER
NOTE 2:	In the above table, the first set of readings for a particular reflector position are made prior to the integration interval; the second set of readings are made approximately 1/2 way through the integration period.
NOTE 3:	Digital "A" data as read by the spacecraft shall contain an undetermined number of "fill words". These fill words shall be 0001H and will be intermingled with valid data. The Digital "A" data as sent by the instrument shall be such that no valid data of 0001H shall be included.
NOTE 4:	Format of Position data is: DDDDDDDDDDDDDDE0 D = Data E = Error bit: 0 = not in spec, 1 = spec. 0 = Zero
NOTE 5:	Format of Radiometer data is: DDDDDDDDDDDDDDD0 D = Data 0 = Zero
NOTE 6:	Temperature sensor reference voltage is utilized for temperature sensors 13 through 19 only.

Figure 18.4-7. AMSU-A2 Digital "A" Data Format - Full Scan Mode (Continued).

A2 FRAME BYTE NO.	PARAMETER
1-3	Sync. Sequence (FF Hex)
4	Unit Identification and Serial Number
5	Digital Housekeeping Data 1
6	Digital Housekeeping Data 2
7	Digital Housekeeping Data 3
8	Digital Housekeeping Data 4
9	Reflector, Warm Cal. Position, MSP, First reading
10	Reflector, Warm Cal. Position, LSP, First reading
11	Reflector, Warm Cal. Position, MSP, Second reading
12	Reflector, Warm Cal. Position, LSP, Second reading
13	Warm Cal. Position, Channel 1, MSP
14	Warm Cal. Position, Channel 1, LSP
15	Warm Cal. Position, Channel 2, MSP
16	Warm Cal. Position, Channel 2, LSP
Bytes 9 through 16 are repeated 29 times for a total of 30 data sets.	
249	Temp Sensor 1, MSP
250	Temp Sensor 1, LSP
251	Temp Sensor 2, MSP
252	Temp Sensor 2, LSP
.	.
.	.
285	Temp Sensor 19, MSP
286	Temp Sensor 19, LSP
287	Temp Sensor Reference Voltage, MSP
288	Temp Sensor Reference Voltage, LSP
See note from Figure 18.4-7	

Figure 18.4-8. AMSU-A2 Digital "A" Data Format - Warm Cal Mode.

A2 FRAME BYTE NO.	PARAMETER
1-3	Sync. Sequence (FF Hex)
4	Unit Identification and Serial Number
5	Digital Housekeeping Data 1
6	Digital Housekeeping Data 2
7	Digital Housekeeping Data 3
8	Digital Housekeeping Data 4
9	Reflector, Cold Cal. Position, MSP, First reading
10	Reflector, Cold Cal. Position, LSP, First reading
11	Reflector, Cold Cal. Position, MSP, Second reading
12	Reflector, Cold Cal. Position, LSP, Second reading
13	Cold Cal. Position, Channel 1, MSP
14	Cold Cal. Position, Channel 1, LSP
15	Cold Cal. Position, Channel 2, MSP
16	Cold Cal. Position, Channel 2, LSP
Bytes 9 through 16 are repeated 29 times for a total of 30 data sets.	
249	Temp Sensor 1, MSP
250	Temp Sensor 1, LSP
251	Temp Sensor 2, MSP
252	Temp Sensor 2, LSP
.	.
.	.
285	Temp Sensor 19, MSP
286	Temp Sensor 19, LSP
287	Temp Sensor Reference Voltage, MSP
288	Temp Sensor Reference Voltage, LSP
See note from Figure 18.4-7	

Figure 18.4-9. AMSU-A2 Digital "A" Data Format - Cold Cal Mode.

A2 FRAME BYTE NO.	PARAMETER
1-3	Sync. Sequence (FF Hex)
4	Unit Identification and Serial Number
5	Digital Housekeeping Data 1
6	Digital Housekeeping Data 2
7	Digital Housekeeping Data 3
8	Digital Housekeeping Data 4
9	Reflector, Position 15, MSP, First reading
10	Reflector, Position 15, LSP, First reading
11	Reflector, Position 15, MSP, Second reading
12	Reflector, Position 15, LSP, Second reading
13	Nadir Position, Channel 1, MSP
14	Nadir Position, Channel 1, LSP
15	Nadir Position, Channel 2, MSP
16	Nadir Position, Channel 2, LSP
Bytes 9 through 16 are repeated 29 times for a total of 30 data sets.	

Figure 18.4-10. AMSU-A2 Digital "A" Data Format - Nadir Mode.

A2 FRAME BYTE NO.	PARAMETER
249	Temp Sensor 1, MSP
250	Temp Sensor 1, LSP
251	Temp Sensor 2, MSP
252	Temp Sensor 2, LSP
.	.
.	.
285	Temp Sensor 19, MSP
286	Temp Sensor 19, LSP
287	Temp Sensor Reference Voltage, MSP
288	Temp Sensor Reference Voltage, LSP
See note from Figure 18.4-7	

Figure 18.4-10. AMSU-A2 Digital "A" Data Format - Nadir Mode (Continued).

DIGITAL BIT	HOUSEKEEPING DATA, BYTE NUMBER 1 DESCRIPTION
0	0
1	Full Scan Mode. 0 = Not Full Scan, 1 = Full Scan
2	Warm Cal Mode. 0 = Not in Warm Cal, 1 = Warm Cal
3	Cold Cal Mode. 0 = Not in Cold Cal, 1 = Cold Cal
4	Nadir Mode. 0 = Not in Nadir, 1 = Nadir
5	Cold Cal Position, LSB
6	Cold Cal Position, MSB
7	0
DIGITAL BIT	**HOUSEKEEPING DATA, BYTE NUMBER 2 DESCRIPTION**
0	0.
1	Scanner A2 Power. 0 = Off, 1 = On.
2	Scanner Compensator Power. 0 = Off, 1 = On.
3	0.
4	Survival Heater Power. 0 = Off, 1 = On.
5	0.
6	0.
7	0.
DIGITAL BIT	**HOUSEKEEPING DATA, BYTE NUMBER 3 DESCRIPTION**
0	0.
1	0.
2	0.
3	0.
4	0.
5	0.
6	0.
7	0.

Figure 18.4-11. AMSU-A2 Data Word Description.

DIGITAL BIT	HOUSEKEEPING DATA, BYTE NUMBER 4 DESCRIPTION
0	0.
1	0.
2	0.
3	0.
4	0.
5	0.
6	0.
7	0.
AMSU A2 NUMBER	**TEMP SENSOR ASSIGNMENTS LOCATION**
1	Scan Motor
2	Feed Horn
3	RF Mux
4	Mixer IF Amplifier Channel 1
5	Mixer IF Amplifier Channel 2
6	Local Oscillator Channel 1
7	Local Oscillator Channel 2
8	Compensation Motor
9	Subreflector
10	DC/DC Converter
AMSU A2 NUMBER	**TEMP SENSOR ASSIGNMENTS LOCATION**
11	RF Shelf
12	Detector/Preamp Assembly
13	Warm load center
14	Warm load 1
15	Warm load 2
16	Warm load 3
17	Warm load 4
18	Warm load 5
19	Warm load 6
AMSU A2 Unit Number	**IDENTIFICATION WORDS Identification No. (Binary)**
Engineering Model Module A-2	00000010
Proto Flight Model Module A-2	00000110
Flight Model 1 Module A-2	00001010
Flight Model 2 Module A-2	00001110

Figure 18.4-11. AMSU-A2 Data Word Description (Continued).

18.4.6 COMMANDS

Figure 18.4-12 identifies the complete set of commands for AMSU-A2 with mnemonics and description of effects. The AMSU-A2 is provided four pulse discrete and nine level discrete commands for a total of 13 commands.

The pulse discrete commands have a pulse width of 60 $\pm$5 milliseconds to operate the relays. For level commands, the "ON", "TRUE" or "LOW" level is indicated by a logic "1" or zero volt level. The "OFF", "FALSE" or "HIGH" level is indicated by a logic "0" or +10 volt level for CMOS logic. The pulse discrete and level discrete commands are supplied from separate eight bit parallel output buffers.

COMMAND	MNEMONIC	DESCRIPTION
Direct Commands - Pulse Discrete		
MODULE POWER DISCONNECT	A2MPD	A negative pulse used to pulse the "off" coil of the latching relay which controls the 28 Vdc regulated and 28 Vdc pulsed power. Immediately removes all 28 Vdc excitation from the instrument. Antenna position is unknown. State of power control relays unchanged. Highest priority command.
MODULE POWER CONNECT	A2MPC	A negative pulse used to pulse the "on" coil of the latching relay which controls the 28 Vdc regulated and 28 Vdc pulsed power.
SURVIVAL HEATER POWER OFF	A2HPF	A negative pulse used to pulse the "off" coil of the latching relay which controls the survival heaters. (Controlled solely by spacecraft).
SURVIVAL POWER HEATER ON	A2HPN	A negative pulse used to pulse the "on" coil of the latching relay which controls the survival heaters. (Controlled solely by spacecraft).
Microprocessor Processed Commands - Level Discrete (0 = false = 10 Vdc, 1 = true = 0 Vdc)		
MODULE TOTALLY OFF	A2MTF/N	Position antennas to Warm Cal position. Turn both scanner and compensation motor power to off. Remove power to both the 28 Vdc regulated and pulsed busses. 0 = Not off, 1 = off. NOTE: If the MODULE POWER DISCONNECT command is commanded to the OFF state and then the MODULE TOTALLY OFF command is commanded to the OFF state, then the MODULE TOTALLY OFF command will be ignored.
SCANNER A-2 POWER (ON/OFF)	A2SPN/F	Commands the control of power to Scanner A-2. 0 = Off, 1 = On.
COMPENSATION MOTOR POWER (ON/OFF)	A2CPN/F	Commands the control of power compensator motor. 0 = Off, 1 = On.
WARM CAL*	A2WCN/F	0 = No action, 1 = Command antennas to Warm Cal position.
COLD CAL*	A2CCN/F	0 = No action, 1 = Command antennas to Cold Cal position.
NADIR*	A2NAN/F	0 = No action, 1 = Command antenna to nadir position.
FULL SCAN*	A2FSN/F	0 = No action, 1 = Full scan mode.
Cold Cal Position MSB	A2CMO/1	MSB LSB 0 0 Position 1 6.6670 From -Z Axis 0 1 Position 2 8.3330 From -Z Axis 1 0 Position 3 9.9990 From -Z Axis 1 1 Position 4 13.3320 From -Z Axis
Cold Cal Position LSB	A2CLO/1	

*Order of execution priority: Full Scan Mode, Warm Cal Mode, Cold Cal Mode, and Nadir Mode

Figure 18.4-12. AMSU-A2 Operational Commands.

All commands are individually verified through Digital "B" telemetry, except for the MODULE TOTAL OFF and Module Power Disconnect commands which have a common Digital B indicator.

18.4.6.1 Safe State

Safe state is defined as having a known spacecraft condition, and having the instrument at minimum power and a predetermined configuration. The command sequence to take the instrument to safe state is:

1. Send A2MTF command to OFF (logic 1)

2. Send A2HPN command.

18.4.6.2 Power Down Mnemonic Sequence

Two power down conditions exist: emergency and normal sequences. Emergency off is defined as the instrument at zero power and an undetermined instrument configuration. The command sequence for an emergency off condition is:

1. Send A2MPD command.

Normal turn-off is defined as the instrument at zero power and a predetermined instrument configuration. The command sequence for a normal turn-off is:

1. Send A2MTF command to OFF (logic 1)

2. Send A2HPF command.

18.4.6.3 Power Up Mnemonic Sequence

Two power up conditions exist: routine and from an emergency off. The routine power up sequence also covers powering up from a safe state condition. The command sequence for a routine power up is:

1. Send A2HPN command (per spacecraft launch stored command table within 15 minutes of handover)

2. If RF shelf temperature is >+8°C, then proceed

3. Send A2HPF command

4. Send A2MTF command to NOT OFF (logic 0)

5. Send A2MPC command. Read local oscillator temperatures (Digital A)

6. Send A2CMO command to 0 (logic 0)

7. Send A2CLO command to 0 (logic 0)

8. Send A2FSN command to ON (logic 1).

9. Send A2SPN command to ON (logic 1)

10. Send A2CPN command to ON (logic 1)

11. Delay 2 minutes

12. If local oscillator temperatures at A2MPC (step 5) are <+5°C, wait until local oscillator temperatures are ≥+5°C, then go to step 14

13. If local oscillator temperatures at A2MPC are ≥+5°C, skip steps 14-18 (turn-on is complete)

14. Send A2MTF command to OFF (logic 1)

15. Delay 20 seconds

16. Send A2MTF command to NOT OFF (logic 0)

17. Send A2MPC command

18. Repeat steps 5 through 10, as appropriate.

To turn on the AMSU-A2 modules after an emergency power down, the following command sequence is used:

1. Send A2MTF command to OFF (logic 1)

2. Send A2MPC command

3. Perform normal turn-on as above.

18.4.7 MIRP PROCESSING

MIRP Processing is not applicable to the AMSU-A2 instrument.

18.4.8 POWER INPUT AND PROFILE

The power requirements for the AMSU-A2 module for all modes are shown in Figure 18.4-13.

OPERATIONAL MODE	INPUT POWER, WATTS
OFF	0
SAFE STATE/STANDBY	15
NORMAL	28.6
WARM CAL	28.6
COLD CAL	28.6
NADIR	28.6

Figure 18.4-13. AMSU-A2 Power Inputs Profile.

18.4.9 ACTIVATION AND EVALUATION (A&E) PROCEDURE AND TIMELINE

To activate the AMSU-A2 instrument, the normal power-up command sequence (Section 18.4.6.3) is completed while monitoring critical temperature telemetry. The first step is to turn on the survival heater power and maintain heater power until the RF shelf temperatures exceed +8°C. The heater power is then turned off and normal turn-on proceeds.

Power-up steps 3 through 13, as applicable, are completed to power up the AMSU-A2 instrument. This is followed by a two minute delay. The local oscillator temperature data is monitored during this process to determine if the local oscillator temperature was ≥+5°C at the time the A2MPC command was sent. If the local oscillator temperature is ≥+5°C at this step, the Digital "B" telemetry is checked to verify instrument status. With successful verification of instrument status, the instrument is in the normal operating mode.

If the local oscillator temperature is <+5°C at the time the A2MPC command was sent, the module is turned off. The operator waits 20 seconds, then repowers and reconnects the instrument to repeat the power-up cycle. Steps 3 through 11 are completed again, followed by another two minute delay and a rechecking of the module telemetry. This cycle is repeated until

the local oscillator temperature is ≥5°C. At that time, the instrument Digital "B" telemetry is checked to verify instrument status, thus completing the activation process.

18.4.10 OPERATIONAL MODES

The AMSU-A2 operational modes are: safe state/standby, normal/in-orbit, warm calibration, cold calibration, nadir, emergency off, and normal turn off. The instrument status for each operation mode is shown in Figure 18.4-14.

18.4.11 CALIBRATION REQUIREMENTS

There are no specific calibration procedures for AMSU-A2. The instrument is automatically calibrated each data cycle by measuring both warm and cold calibration targets.

18.4.12 ROUTINE COMMAND REQUIREMENTS

During normal mode, there are no specific command requirements. However, there are adjustments that can be commanded to select a cold calibration position different from that selected during turn-on. In addition, three unique operating modes can be commanded: warm calibration mode, cold calibration mode and nadir mode.

18.4.12.1 Selection of Cold Calibration Position

To select a cold calibration position different from the primary position used during power-up, the following command sequence is employed:

1. Send A2FSF command to NO ACTION (logic 0)
2. Send A2WCF command to NO ACTION (logic 0)
3. Send A2CCN command to ON (logic 0)
4. Wait at least 18 seconds
5. Send A2CMO/1 and A2CLO/1 command (see Figure 18.4-12 for specific cold calibration position combinations for AMSU-A2)
6. Wait at least 18 seconds
7. Send A2CCF command to NO ACTION (logic 0)
8. Send A2FSN command to ON (logic 1).

Operation Modes	AMSU-A2 INSTRUMENT STATUS									Scanner Position
	INPUT POWER						OUTPUT SIGNALS			
	Mainload Bus	Pulse Load Bus		Analog Temp TLM Data Bus	=10 Volt Interface B Bus	Analog Temp TLM Data Bus	Digital A Data	Digital B Data	Analog TLM Data	
		Heater	Ant. Drive							
Prior to Launch Delivery	OFF	OFF	OFF	OFF	OFF	NO	NO	NO	NO	Warm Cal Position
Safe State/ Standby Mode	OFF	ON	OFF	ON	ON	YES	NO	Limited Refer to UIIS	NO	Warm Cal Position
Normal/In-Orbit Mode	ON	ON	ON	ON	ON	YES	YES. Refer to Figure 18.4-7	YES	YES	Full Scan/In-Orbit
Unique Operation Mode										
a. Warm Cal Mode	ON	ON	ON	ON	ON	YES	YES. Refer to Figure 18.4-8	YES	YES	Scanner at Warm Cal
b. Cold Cal Mode	ON	ON	ON	ON	ON	YES	YES. Refer to Figure 18.4-9	YES	YES	Scanner at Cold Cal
c. Nadir Mode	ON	ON	ON	ON	ON	YES	YES. Refer to Figure 18.4-10	YES	YES	Scanner at Nadir Position
Emergency Off	OFF		OFF				NO	NO	NO	Unknown
Normal Turn Off	OFF	OFF	OFF	ON	ON	YES	NO	NO	NO	Warm Cal Position

Figure 18.4-14. Instrument Status vs. Operation Modes.

18.4.12.2 Warm Calibration Mode

To enter the warm calibration mode from normal mode, enter the following command sequence:

1. Send A2FSF command to NO ACTION (logic 0)
2. Send A2WCN command to ON (logic 1)

18.4.12.3 Cold Calibration Mode

To send the AMSU-A2 module to cold calibration mode from normal mode, enter the following command sequence:

1. Send A2FSF command to NO ACTION (logic 0)
2. Send A2WCF command to NO ACTION (logic 0)
3. Send A2CCN command to ON (logic 1)

18.4.12.4 Nadir Position Mode

To send the AMSU-A2 module to the nadir position mode from normal mode, enter the following command sequence:

1. Send A2FSF command to NO ACTION (logic 0)
2. Send A2WCF command to NO ACTION (logic 0)
3. Send A2CCF command to NO ACTION (logic 0)
4. Send A2NAN command to ON (logic 1)

18.4.13 EVALUATION OF NOMINAL PERFORMANCE AND TREND REQUIREMENTS

Nominal performance of the AMSU-A2 modules is determined by the Analog and Digital "A" voltage, current and temperature telemetry falling within the acceptable limits. The AMSU-A2 Analog and applicable Digital "A" telemetry limits are shown in Figures 18.4-5 and 18.4-15, respectively.

18.4.14 CONSTRAINTS

18.4.14.1 Pre-Launch and Launch Constraints

The AMSU-A2 module will be in the MODULE TOTALLY OFF state prior to delivery and during launch. That means that all antennas will be at the warm calibration position, power to all scanners and to the AMSU-A2 compensation motor will be in the OFF state, and power to the +28Vdc MLB and PLB will be in the OFF state.

18.4.14.2 Initial Turn-On Constraints

The constraints prior to initial turn-on are:

1. The temperature of the receiver shelf must be within -20°C to +40°C
2. Survival Heater Power must be OFF.

18.4.14.3 Operational Constraints

The only operational constraints are those defined by the Analog and applicable Digital "A" telemetry, as described in Section 18.4.12.

Temperature Sensor #	Description	Indicator Limit Deg. C	Instrument Within Spec (low) C	Instrument Within Spec (high) C	Indicator Limit Deg. C
1	Scan Motor A-2	-10.0	-7.0	30.0	48.0
2	Feed Horn	-10.0	-7.0	30.0	48.0
3	RF Multiplexer	-10.0	-7.0	30.0	48.0
4	Mixer IF Amplifier Channel 1	-10.0	-7.0	30.0	48.0
5	Mixer IF Amplifier Channel 2	-10.0	-7.0	30.0	48.0
6	Local Oscillator Channel 1	-10.0	-7.0	30.0	48.0
7	Local Oscillator Channel 2	-10.0	-7.0	30.0	48.0
8	Compensator Motor	-10.0	-7.0	30.0	48.0
9	Sub Reflector	-10.0	-7.0	30.0	48.0
10	DC/DC Converter	-10.0	-7.0	30.0	48.0
11	RF Shelf	-10.0	-7.0	30.0	48.0
12	Detector/Pre-amp Assembly	-10.0	-6.0	30.0	48.0
13	Warm Load Center	-20.0	-7.0	30.0	40.0
14	Warm Load 1	-20.0	-7.0	30.0	40.0
15	Warm Load 2	-20.0	-7.0	30.0	40.0
16	Warm Load 3	-20.0	-7.0	30.0	40.0
17	Warm Load 4	-20.0	-7.0	30.0	40.0
18	Warm Load 5	-20.0	-7.0	30.0	40.0
19	Warm Load 6	-20.0	-7.0	30.0	40.0

Figure 18.4-15. AMSU-A2 Nominal Temperature Ranges.

18.5 ADVANCED MICROWAVE SOUNDING UNIT - B (AMSU-B)

18.5 ADVANCED MICROWAVE SOUNDING UNIT - B (AMSU-B)

18.5.1 FUNCTIONAL DESCRIPTION

The Advanced Microwave Sounding Unit-B (AMSU-B) is a 5 channel microwave radiometer. The purpose of the instrument is to receive and measure radiation from a number of different layers of the atmosphere in order to obtain global data on humidity profiles. It works in conjunction with the AMSU-A instruments to provide a 20 channel microwave radiometer.

The microwave characteristics of the atmosphere are provided in Figure 18.5-1. AMSU-B covers channels 16 through 20. The highest channels 18, 19 and 20 span the strongly opaque water vapor absorption line at 183 GHz and provide data on the atmosphere's humidity level. Channels 16 and 17, at 89 GHz and 150 GHz respectively, enable deeper penetration through the atmosphere to the Earth's surface.

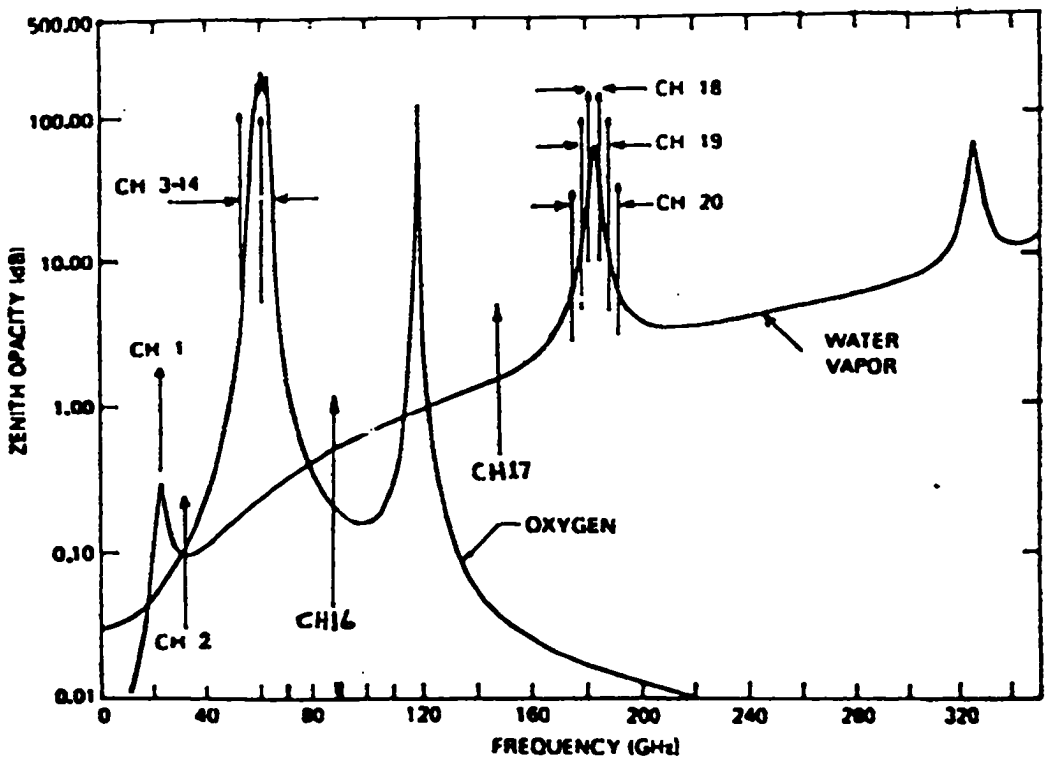

Figure 18.5-1. Microwave Characteristics of the Atmosphere.

AMSU-B is a cross-tract, line scanned instrument designed to measure scene radiances in 5 channels. At each channel frequency, the antenna beamwidth is a constant 1.1° (at the half power point). Ninety contiguous scene resolution cells are sampled in a stepped-scan fashion as shown in Figure 18.5-2, each scan covering 50° on each side of the subsatellite path. These scan patterns and geometric resolution translate to a 17 km diameter cell at nadir.

The AMSU-B instrument consists of a scanning parabolic reflector antenna which is rotated once every 8/3 seconds and focuses incoming radiation into a quasi-optic system which then separates the frequencies of interest into three separate feed horns of the receiver assembly. The receiver subsystem provides further demultiplexing of the 183 GHz signal in order to selectively acquire three defined double sided bands around the 183 GHz signal. The passbands for all five channels are shown in Figure 18.5-3. The center frequencies for channels 18, 19, and 20 are 183.31 ± 1.00 GHz, 183.31 ± 3.00 GHz, and 183.31 ± 7.00 GHz respectively.

The reflector is rotated in a profiled scan span, as shown in Figures 18.5-4 and 18.5-5, in order to provide a constant velocity Earth scan, a low speed scan across an internal calibration source, a low speed scan towards deep space and a scan repeat cycle time that does not allow for constant velocity rotation. The direction of the scan motion is from the sunside (+Z) to Nadir (+X) to the antisunside (-Z). During earthscan, motion is continuous with an angular velocity constant to within ±2%. The deep space and internal blackbody reference views permit a two-point, in-flight calibration. The entire scan profile is achieved through microprocessor control.

Three different data streams are processed and delivered by the instrument to either the spacecraft's AMSU Instrument Processor (AIP) or the TIROS Information Processor (TIP). Digital data, which consists of earth view pixel data, housekeeping data, and space and blackbody view data, is clocked into the AIP. The TIP samples both digital "B" and analog telemetry. The digital "B" telemetry contains instrument status monitors used to verify commands, and the analog telemetry provides health and safety monitoring of AMSU-B.

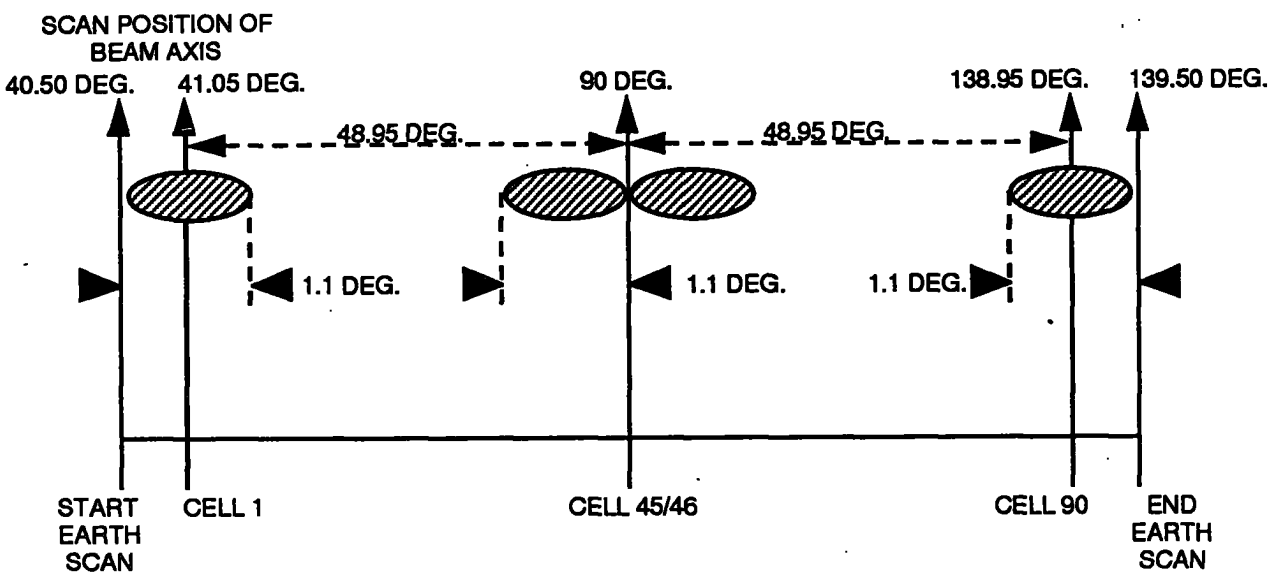

Figure 18.5-2. AMSU-B Scanning.

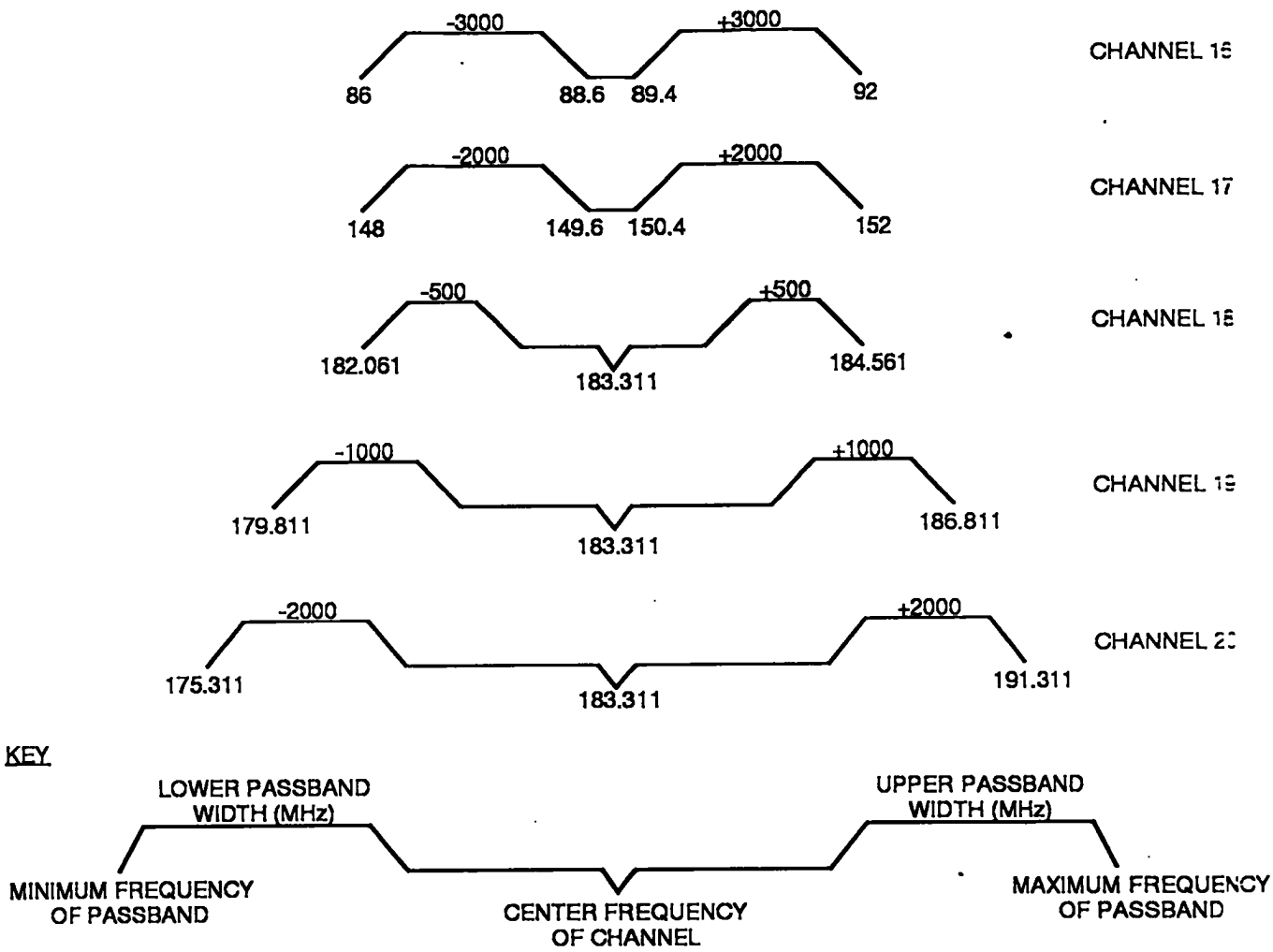

Channel Number	Center Frequency (GHz)	Bandwidth (MHz)			
		Double Sided Maximum	Pass Band	IF Band	Stop Band
16	89.0	6000	3000	≥ 1000	± 400
17	150.0	4000	2000	≥ 1000	± 400
18	183.31 ± 1.00	1000	2 x 500	500	-
19	183.31 ± 3.00	2000	2 x 1000	1000	-
20	183.31 ± 7.00	4000	2 x 2000	2000	-

Figure 18.5-3. AMSU-B Center Frequencies and Bandwidths

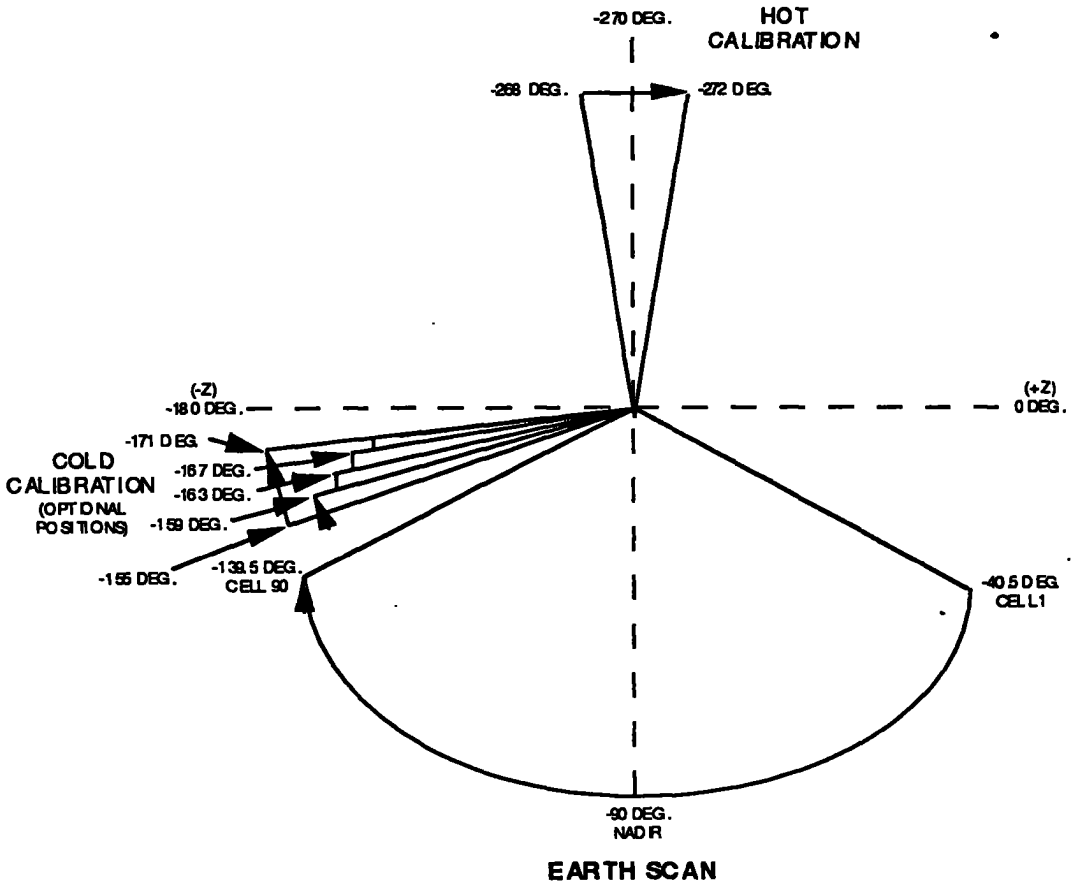

Figure 18.5-4. Definition of AMSU-B Scan Plan and Motion.

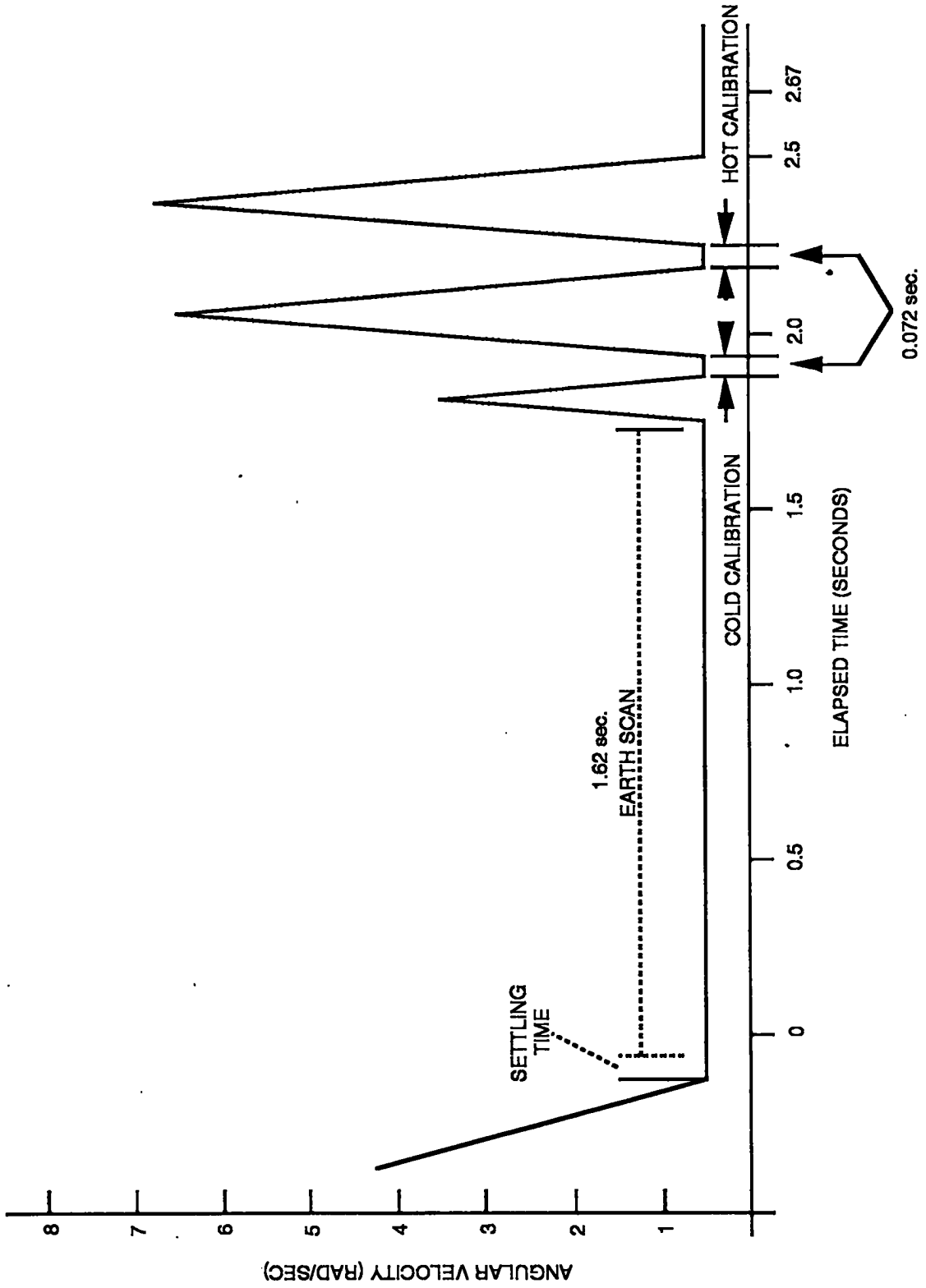

Figure 18.5-5. AMSU-B Scan Profile.

18.5.2 SYSTEM DESCRIPTION

18.5.2.1 General

The overall purpose of AMSU-B is to receive and measure radiation from a number of different layers within the atmosphere in order to obtain global data on humidity profiles for synoptic weather forecasting.

The radiation from the atmosphere is viewed by an offset parabolic reflector inclined to the axis of rotation. The antenna is rotated by means of a scanning mechanism which is capable of slewing the antenna between hot and cold calibration references and scanning the antenna to view a swath across the atmosphere. Radiation from the antenna is propagated via a fixed subreflector to a quasi-optic feed where it is divided into 89, 150 and 183.3 GHz bands and then to a Microwave Receiver where it is downconverted, amplified and detected. The detected signals are amplified, sampled and averaged under processor control to provide an integration time of 18 msec in each channel. The digital signals are then buffered before being relayed to the Satellite bus.

The AMSU-B consists of the following:

- Microwave and Antenna Subsystem (MASS) comprising:
  - Main Reflector/Shroud
  - Subreflector
  - Quasi-Optic Feed
  - Microwave Receiver
  - Calibration Target
- Scanning Mechanism
- Electrical Subsystem comprising:
  - Processing Electronics Unit (PEU)
  - Motor Drive Electronics (MDE) and Inductosyn Control Electronics (ICE)
  - Power Supply Unit (PSU)
  - Electrical Harness
- Structure Subsystem
- Thermal Control Subsystem
- Software

Block diagrams of the AMSU-B are shown in Figures 18.5-6 (a) and (b). A general configuration view of AMSU-B is shown in Figure 18.5-7.

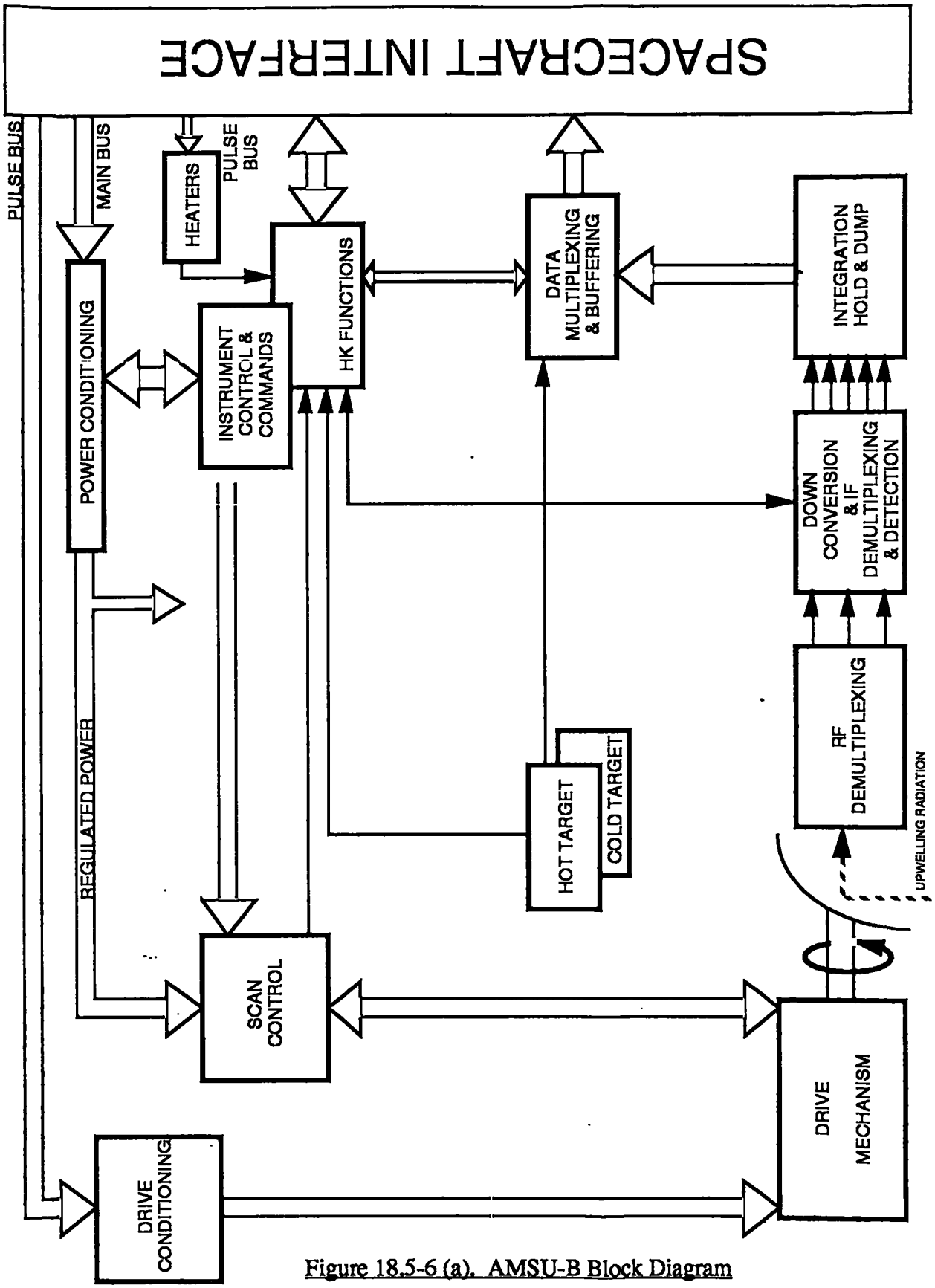

Figure 18.5-6 (a). AMSU-B Block Diagram

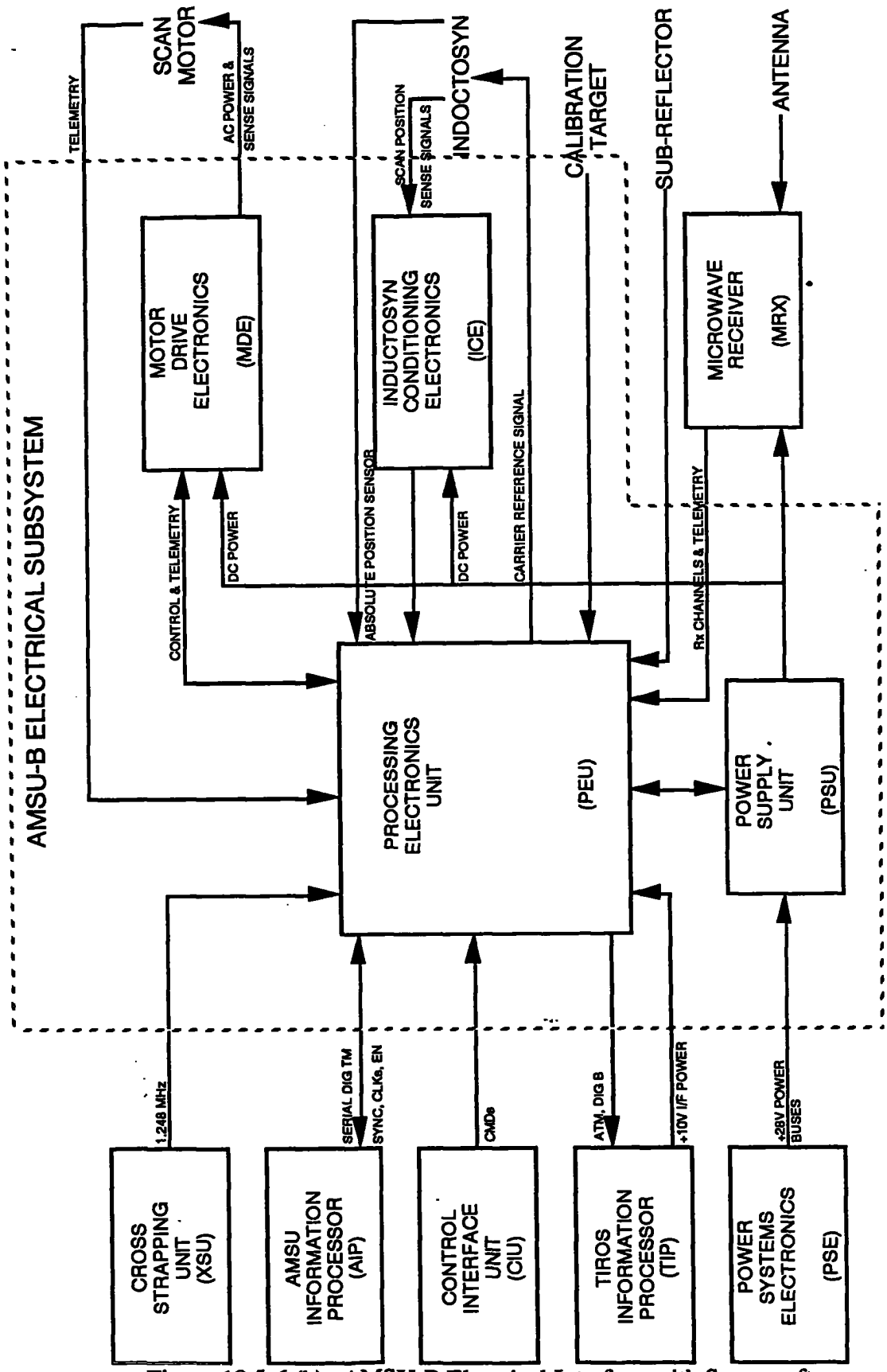

Figure 18.5-6 (b). AMSU-B Electrical Interface with Spacecraft

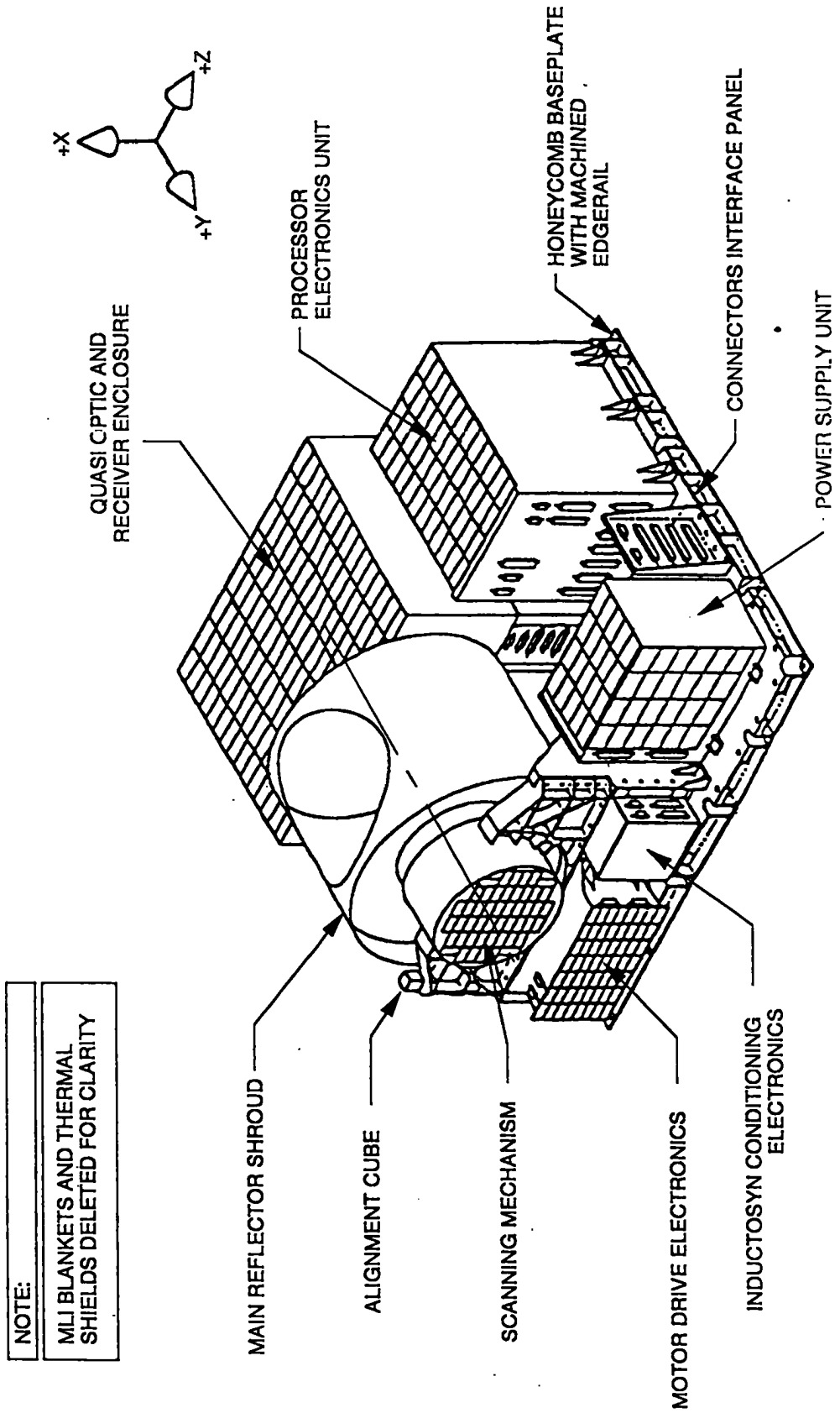

Figure 18.5-7. AMSU-B General Configuration

18.5.2.2 Main Reflector and Shroud

The Beryllium Main Reflector and Shroud form a simple integrated assembly. The shroud is fabricated from hot-formed Beryllium sheet and its sections are epoxy bonded together. The main reflector is of brazed egg crate construction with a machined and polished front skin. The thermal balance of the ambient temperature calibration target and the stringent calibration accuracy requirements necessitate a shroud enclosing the antenna main reflector to eliminate extraneous radiation from the calibration target region. This shroud incorporates suitable cut-outs such that the shroud does not obscure the field-of-view of the radiometer. The main reflector/shroud assembly includes mounting fixtures to enable support from the scanning mechanism interface.

18.5.2.3 Subreflector

The Subreflector consists of a fixed mirror which relays radiation from the rotating Main Reflector into the Quasi-Optic Feed.

18.5.2.4 Quasi Optic Feed

The Quasi Optic Feed takes the radiation reflected from the Main Reflector and separates this into the three radiometric frequency bands of the instrument at 89, 150 and 183.31 GHz through the use of dichroic plate filters (DCP's). It then passes these frequency bands to the Microwave Receiver via microwave feed horns. The Quasi-Optical System, together with the Main and Subreflectors, is shown in Figure 18.5-8, and a system functional diagram is given in Figure 18.5-9.

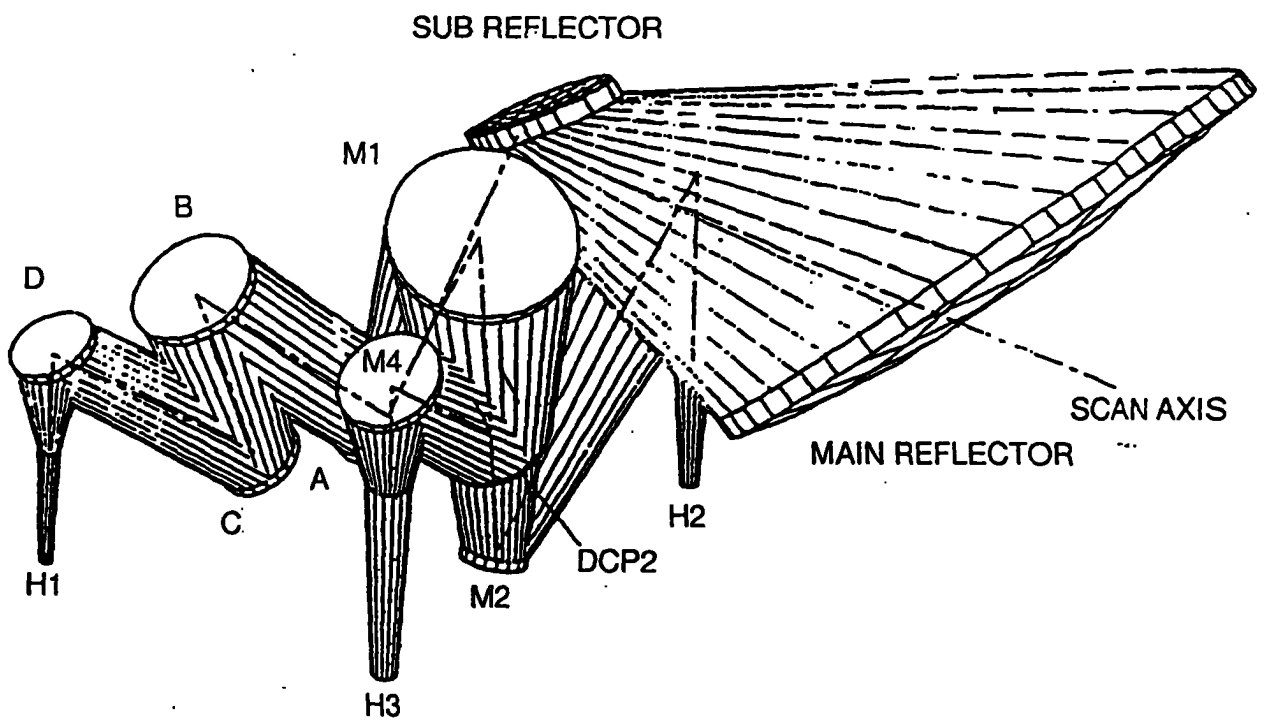

Figure 18.5-8. Quasi-Optical System

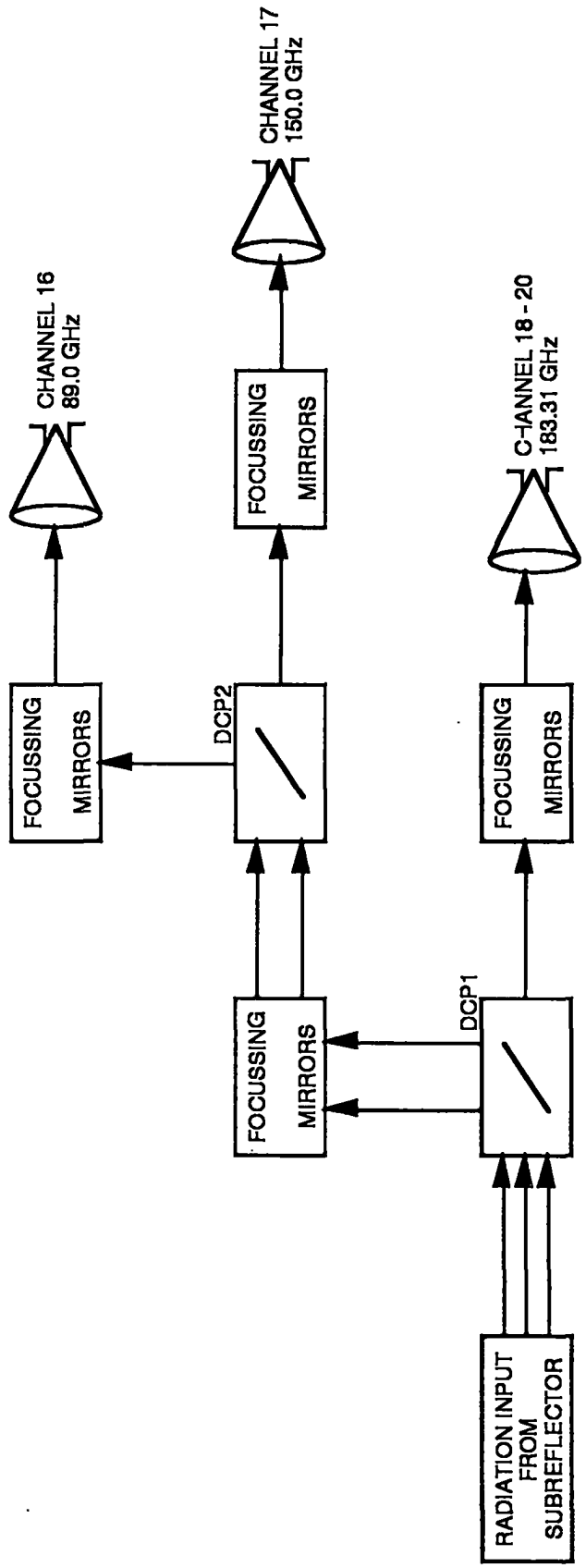

Figure 18.5-9. System Functional Diagram of Quasi-Optic System

18.5.2.5 Microwave Receiver

The function of the Receiver Subsystem is to down-convert and detect the radiation from the Quasi-optics to produce output voltages proportional to the detected RF power. The Receiver has three input channels and five output channels. Channel 16 uses a fundamental mixer with a center frequency of 89 GHz. Channel 17 uses a sub-harmonic mixer with a center frequency of 150 GHz. Channels 18, 19 and 20 are down-converted in one sub-harmonic mixer with a center frequency of 183.3 GHz. The IF output of the mixer is split and detected to produce the three channel outputs. The center frequency and stability are shown in Figure 18.5-10 and a block diagram of the receiver is provided in Figure 18.5-11. The receiver utilizes Gunn diode oscillators which are cavity stabilized and are of the reflection type. The diodes are Germanium mesa construction especially developed for AMSU frequencies. A typical oscillator is diagrammed in Figure 18.5-12.

The temperatures of certain critical components of the Receiver Sub-system are sensed by AD590 temperature/current transducers for Analogue Telemetry or by Platinum Resistance Thermometers (PRTs) for Digital Housekeeping Data.

	Center Frequency (GHz)	Stability (MHz)
CH 16	89.0	±100
CH 17	150.0	±100
CH 18	183.31 ± 1.00	±50
CH 19	183.31 ± 3.00	±70
CH 20	183.31 ± 7.00	±70

Figure 18.5-10. Center Frequency and Stability of the Microwave Receiver

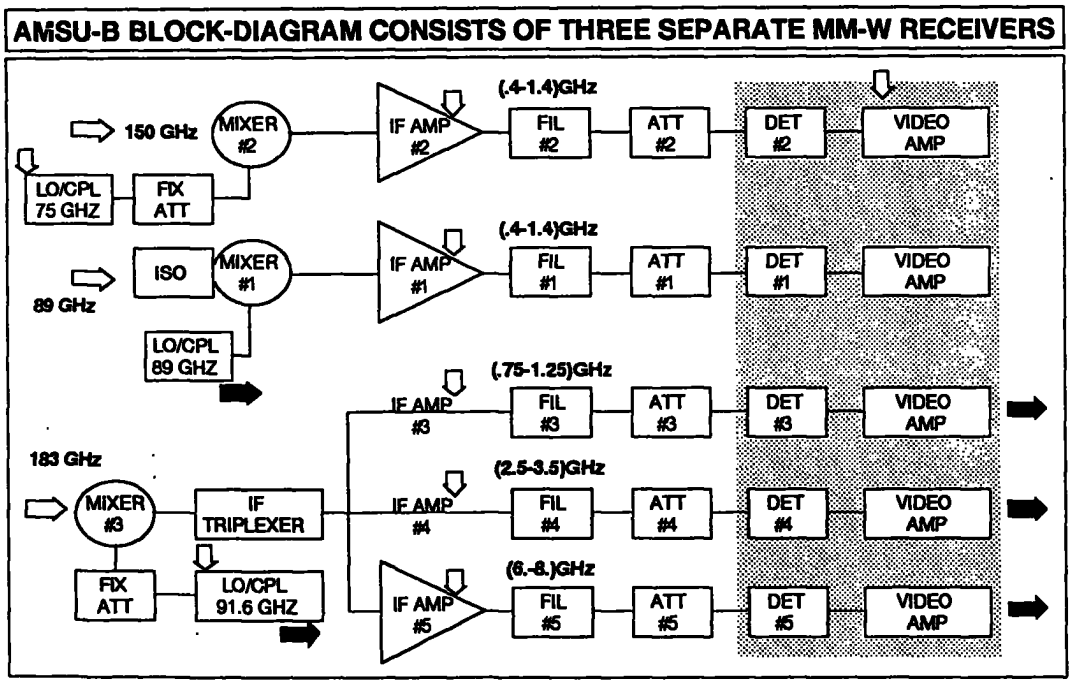

Figure 18.5-11. AMSU-B Receiver Block Diagram

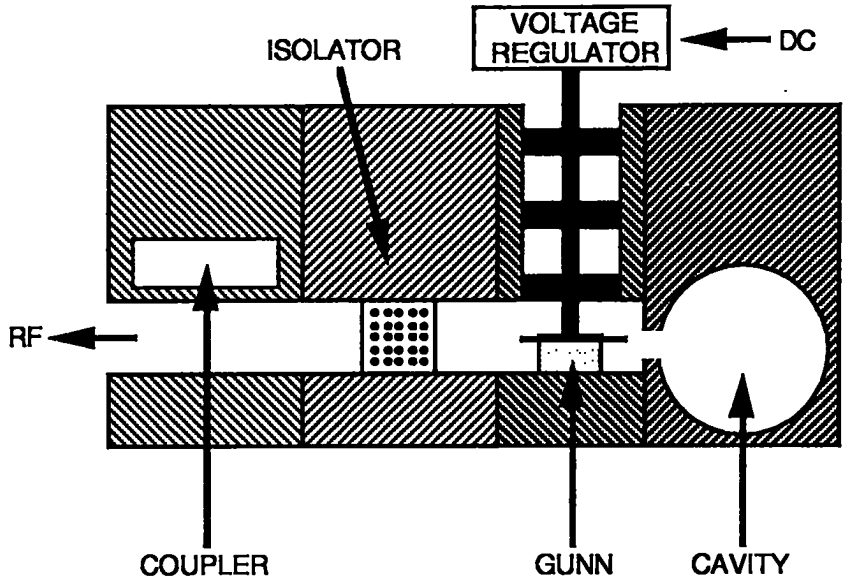

OSC FREQ [GHZ]	75.000 89.000 91.655	FUNDAMENTAL 2ND HARMONIC 2ND HARMONIC	FREQ TESTEDF IN VACUUM

Figure 18.5-12. Cross-Section of AMSU-B Gunn Diode Local Oscillator

18.5.2.6 Calibration Target

The radiometer is continually calibrated in flight with the aid of a cold reference view to space and a "warm" reference consisting of an ambient temperature Calibration Target. The "warm" reference is internal to the instrument. It consists of the following:

- microwave absorber providing quasi - black body radiation at microwave frequencies,
- a magnesium structured core,
- platinum resistance sensors to measure the temperature of the magnesium core accurately,
- an outer containment shroud of aluminum.

The Calibration Target presents a stable, high absorptivity, or quasi-black-body load at approximately 310K into the instrument Main Reflector and is sized to fill the aperture in the Main Reflector/Shroud. The Calibration Target is viewed once during each scan of the instrument to provide a warm calibration reference.

An integral shroud is fitted to match the main reflector/shroud, so that, as the Main Reflector is rotated, extraneous radiation impinging on the target is minimized.

Temperature control of the Calibration Target is passive and is designed to minimize temperature gradients within the target. Target temperature is sensed by seven Platimum Resistance Thermometers (PRTs) whose outputs are conditioned and digitized by the PEU and form part of the digital data telemetry.

18.5.2.7 Scanning Mechanism

The Scanning Mechanism scans the main reflector in a plane perpendicular to the orbit plane in order to enable earth observation. It slews the main reflector to view the earth, cold space and the Calibration Target cyclically. The scanning mechanism consists of:

- motor
- housing
- bearings and lubrication
- scan position resolver (Inductosyn)

Drive and monitoring electronics are provided in the Motor Drive Electronics (MDE) unit and ICE with the scan profile being controlled by the microprocessor in the PEU. The scan subsystem block diagram is illustrated in Figure 18.5-13, and the velocity profile of the motor, which is shown as LUT (look-up table) in 18.5-13, is given in Figure 18.5-14.

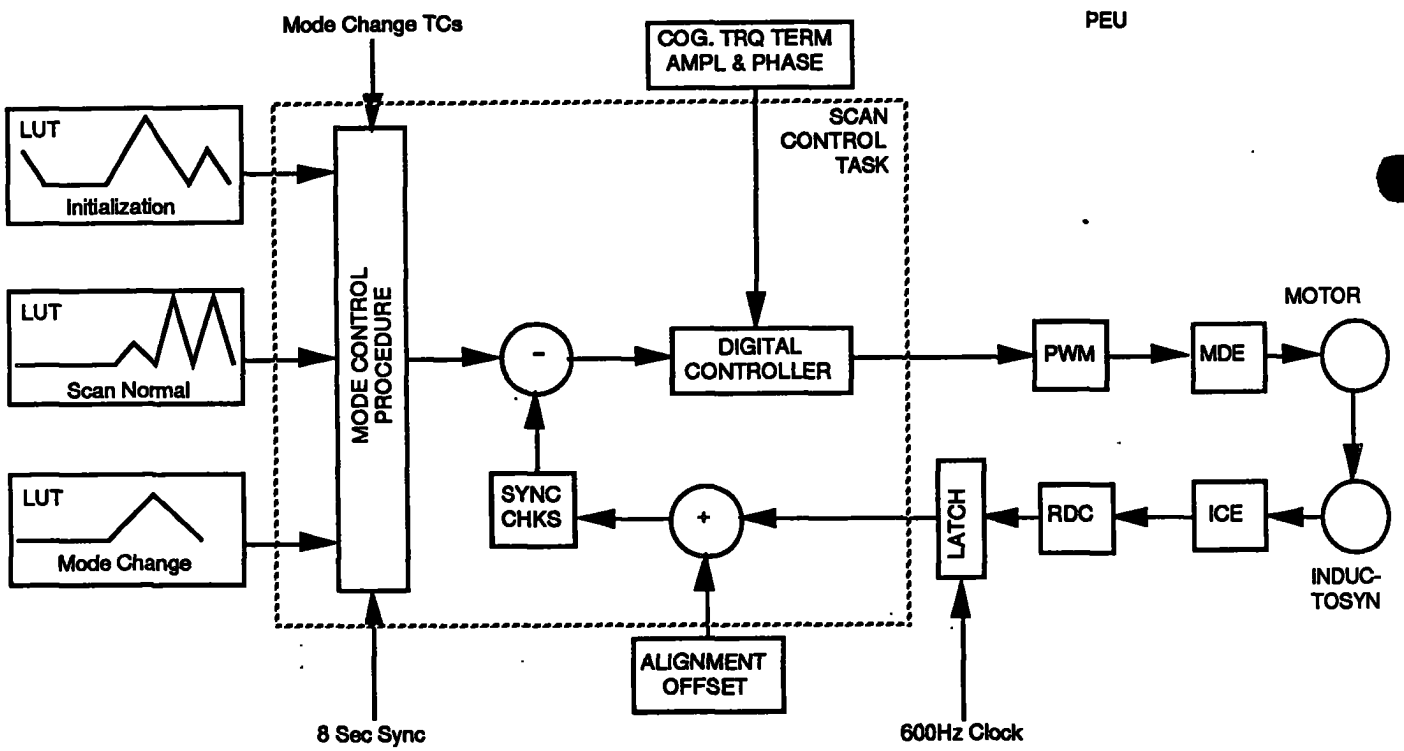

Figure 18.5-13. Scan Subsystem Block Diagram

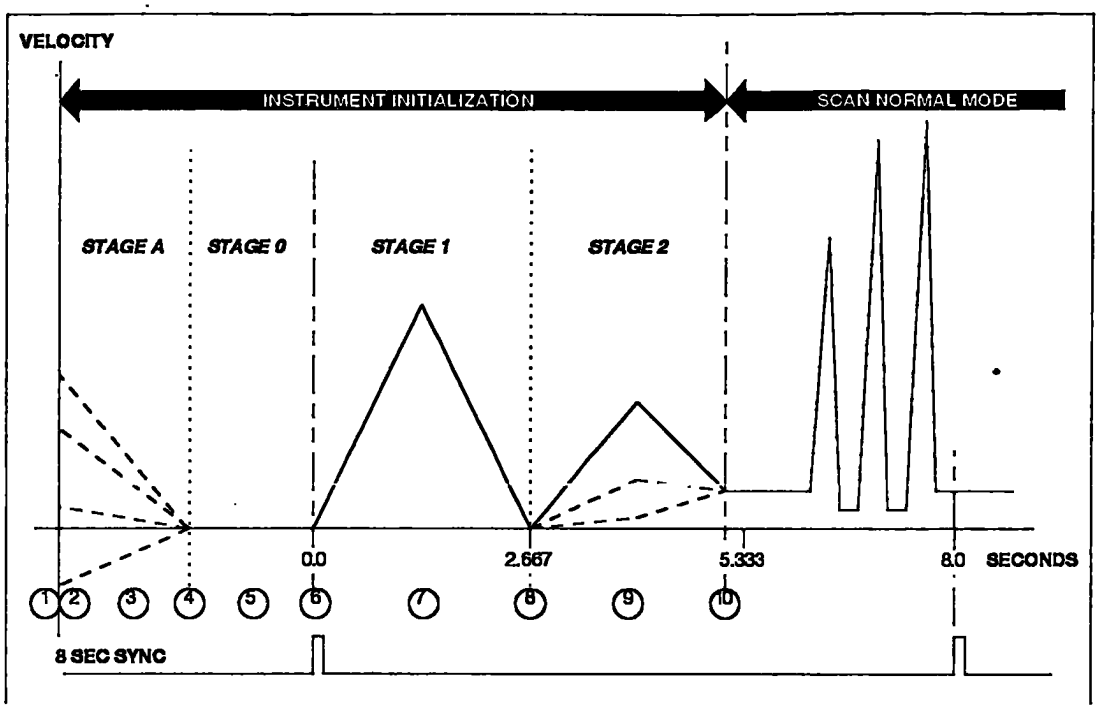

Figure 18.5-14. Instrument Initialization Velocity Profile

18.5.2.8 Processing Electronics Unit

The Processing Electronics Unit (PEU) adopts a MIL-STD-1750 microprocessor solution to meet the requirements of mechanism control, radiometric channel signal conditioning and data interface management with the TIROS bus.

The PEU enables the following primary functions to be performed:

a) Receive and process five (5) video channel output signals from the receiver, integrating each over an 18 ms period prior to conversion within a 1 ms period into five (5) 16-bit digital words. The five digital words from each of the 98 pixels viewed per scan are formatted as part of the serial digital science telemetry data.

b) Condition eleven (11) Platinum Resistance Thermometer (PRT) temperature sensors within the Microwave and Antenna Subsystem and 1 PRT within the Subreflector. Convert the PRT sensor signals into twelve (12) 16-bit digital words and format them as part of the serial digital housekeeping telemetry data.

c) Condition seven (7) PRT temperature sensors within the calibration target. Convert the PRT sensor signals into seven (7) 16-bit serial digital housekeeping telemetry data.

d) Transmit digital control signals to the Motor Drive Electronics (MDE). The signals control the position, speed and direction of the brushless DC motor driving the AMSU-B antenna.

e) Resolve the absolute shaft position over 360° in the form of a 16-bit digital word. This data forms the basis of the motor control loop and is formatted as part of the serial digital telemetry data as a record of the mid-pixel position. The absolute shaft

position is derived from the incremental data from the inductosyn sine and cosine signals and cycle counter, in conjunction with the absolute position reference provided by a Hall-effect device mounted in the inductosyn.

f) Receive 16 command signals from the TIROS Information Processor (TIP). These signals are used to control the status and modes of the AMSU-B instrument.

g) Provided 16 digital-B telemetry channels, which supply AMSU-B mode and status data to the TIP.

h) Condition a temperature sensor within the PEU. Convert the signal into a 16-bit digital word and format it as part of the serial digital housekeeping telemetry data.

i) Receive and process three (3) receiver supply current analog monitor signals from the PSU. Convert the signals into three digital words and format them as part of the serial digital housekeeping telemetry data.

j) Receive and process a pre-conditioned motor current analog signal from the MDE and condition it as part of the analog telemetry data.

k) Condition 8 temperature sensors within the PEU, PSU, MDE, ICE, MASS and brushless DC motor as analog telemetry data.

l) Transmit serial digital telemetry data to the AMSU Information Processor (AIP) in response to clock and enable signals.

18.5.2.9 Motor Drive Electronics Unit and Inductosyn Control Electronics

The function of the MDE is to produce motor drive waveforms in response to control signals from the PEU. The MDE receives the following signals:

- a pulse-width modulated drive signal (PWM SIGNAL) and a bi-level direction control signal (MDE DIRECTION) from the PEU
- three Hall Effect sensor signals (HSA, HSB, HSC) from the motor.

The MDE DIRECTION and Hall Effect sensor signals are decoded to produce motor commutation control signals, sequenced as appropriate to either forward or reverse rotation of the motor. The commutation control signals are combined with PWM SIGNAL to produce isolated drive signals for the Three Phase Bridge, which applies power derived from the 28V Pulse bus to the motor windings.

A thermistor provides an MDE temperature signal, which forms part of the AMSU-B Analog Telemetry output by the PEU.

The ICE conditions the sine and cosine position signals from the Inductosyn to provide feedback signals with the characteristics required by the PEU interface. The conditioning consists of transformer isolation, amplification and automatic gain control.

Automatic gain control is required to compensate for the variations in signal amplitude caused by thermal effects on the Inductosyn. Without gain control, these variations would not meet the input signal amplitude stability requirements of the Resolver-to-Digital Converter in the PEU.

A thermistor provides an ICE temperature signal, which forms part of the AMSU-B Analog Telemetry output by the PEU.

18.5.2.10 Power Supply Unit

The PSU (Figure 18.5-15) performs the following functions:

- converts 28 Volt Main Bus power to provide secondary DC supplies
- provides switching of the 28 Volt Pulse Bus to the Scan Motor and Survival Heaters
- routes the 28 Volt Analog TM Bus power and return to the PEU
- provides switching of the 28 Volt supplies to the receiver and monitoring of the currents drawn

A thermistor provides a PSU temperature signal, which forms part of the AMSU-B Analog Telemetry output by the PEU.

18.5.2.11 Structure

The structure includes the instrument baseplate and local structure for the antenna assembly and receiver/processor. It provides for the mounting of individual units of AMSU-B, provides strength and stiffness to meet the launch requirements and maintains critical alignments. It includes the mounting interface used to attach AMSU-B to the spacecraft, and the EMC screen between the Receiver and Quasi-Optics.

18.5.2.12 Thermal Control

Thermal control of AMSU-B is independent of the spacecraft. Thermal control is achieved by the following:

- thermal finishes and coatings to achieve satisfactory temperature ranges and stability.
- thermistors at various parts of the instrument to monitor critical temperatures
- sunshields and baffles
- "passive plus heaters" to provide adequate instrument temperatures in the non-operating condition (i.e. survival heaters) and safety heaters for ground tests at spacecraft level.
- secondary surface mirrors (SSM) and multilayer insulation (MLI)

The thermal control subsystem maintains instrument subsystem and component temperatures within the limits shown in Figure 18.5.16 during all mission phases.

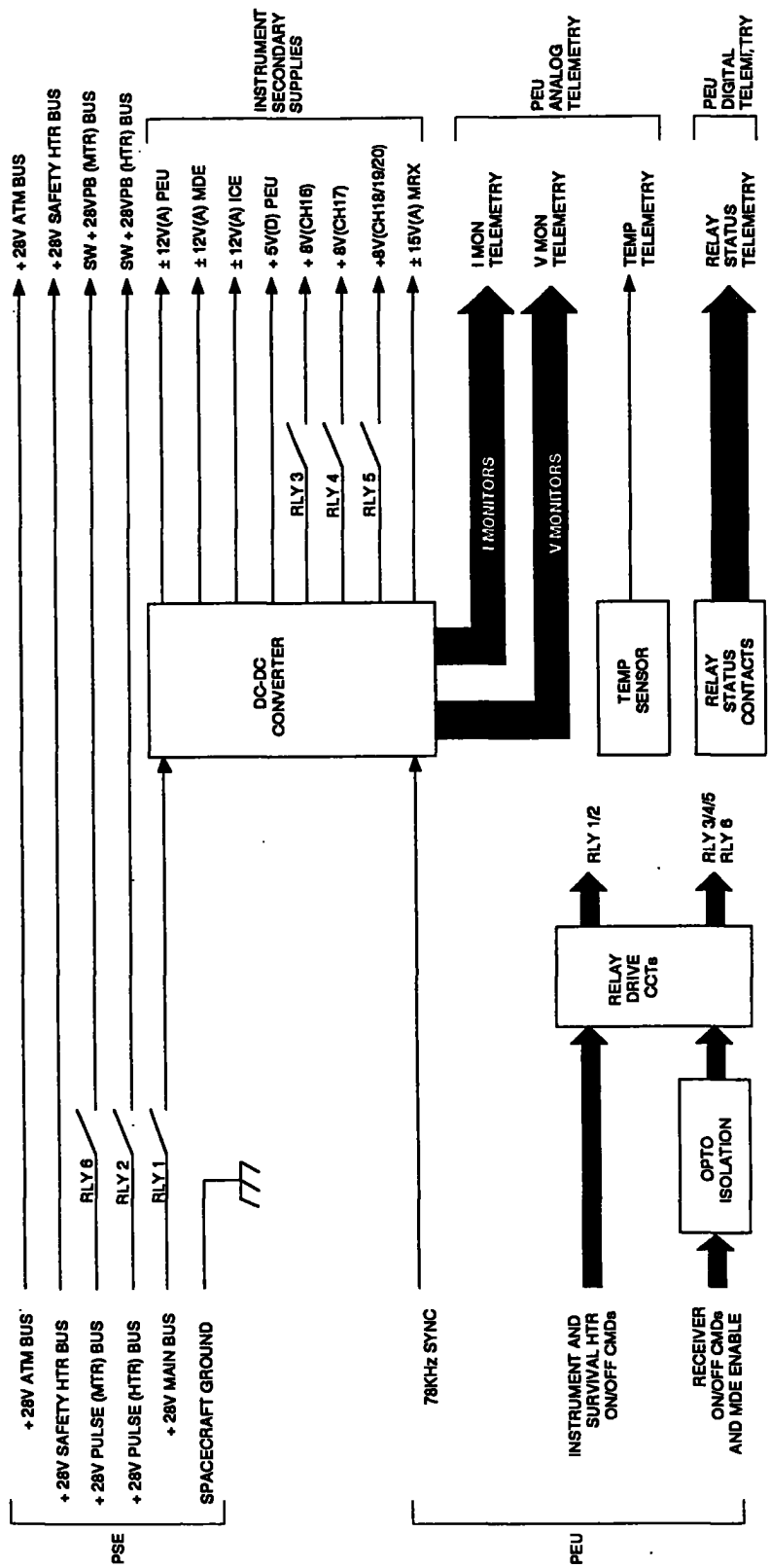

Figure 18.5-15. PSU Block Diagram

Subsystem/Component	Operating Range (°C)	Qualification Range (°C)	Non - Operating Range (°C)
Receiver Subsystem Interfaces	+16 to +36	+6 to +46	-30 to +50
Power Supply Unit	-5 to +60	-15 to +70	-40 to +70
Processing Electronics Unit	-15 to +50	-25 to +60	-55 to +70
Scanning Mechanism	-15 to +50	-25 to +60	-40 to +60
Motor Drive Electronics	-15 to +50	-25 to +60	-55 to +70
Inductosyn Conditioning Electronics	-15 to +63	-25 to +73	-55 to +73
Calibration Source	+12 to +37	+2 to +47	-50 to +50
Antenna	-15 to +50	-25 to +60	-50 to +70
Quasi-Optics Assembly	-15 to +50	-25 to +60	-50 to +60

Figure 18.5-16. Instrument Temperature Ranges.

18.5.2.13 Systems Requirements

A summary of the AMSU-B systems requirements is given in Figure 18.5-17.

Channel	16	17	18	19	20
Frequency (GHz)	89	150	183.3 +/- 1	183.3 +/- 3	183.3 +/- 7
RF Bandwidth (GHz)	<2.8	<2.8	2X1	2X2	2X4
ΔT Temperature Sensitivity	1.0°K	1.0°K	1.1 °K	1.0°K	1.2°K
Calibration Accuracy	1.0°K (+/-0.2°K Random)				
Linearity	0.3°K	0.3°K	<0.33°K	0.3°K	0.36°K
Interchannel Calibration Accuracy	0.5°K				
Beam Efficiency	95%				
Beamwidth	1.1°K +/- 10%				
Beam Pointing Accuracy	+/- 0.10°				
Cross Polarization	2%	2%	N/S	N/S	10%
Passband Sensitivity	<1.5dB over 75% of passband				
Item	**Requirement**				
Mass	60 kg				
Power	90 Watts				
Accommodation	526 mm x 700 mm x 650 mm				
Life & Storage	3 Yrs & 4 Yrs				
Scan Motion	See Figure 18.5-4				
Scan Profile	See Figure 18.5-5				
Scan Angle	+/-48.95°				
Scan Period	8/3 seconds				
Calibration Views	≤4°				
Scan Modes	Normal, Park, Step, Investigation				

Figure 18.5-17. Systems Requirements Summary.

18.5.3 ELECTRICAL AND MECHANICAL BLOCK DIAGRAMS

Figures 18.5-6 (a) and (b) shows the functional block diagram of AMSU-B. The mechanical block diagram is shown in Figure 18.5-7.

18.5.4 INTERFACE TIMING

The spacecraft provides input timing and control signals to the instrument as seen in Figures 18.5-18(a) and 18.5-18(b) and as described below.

18.5.4.1 Clocks

The spacecraft clock used by the AMSU-B is shown in Figure 18.5-19. The characteristics of the clock lines are detailed in Section 3.1.4.3 of the General Instrument Interface Specification, IS-3267415.

The function of this clock with relation to the instrument is to synchronize timing of instrument functions to the spacecraft clock.

18.5.4.2 Synchronization Signals

The spacecraft synchronization signals used by AMSU-B are those listed in Figure 18.5-20 and Figures 18.5-18(a) and (b).

Sync signals in the instrument are as follows:

(1) Major Frame - Not Used

(2) 8 Second Sync - to synchronize the instrument output data format with the start of each AIP frame.

(3) 128-Second Sync - Not Used

(4) 256-Second Sync - Not Used

(5) Data Enable Pulse - enables readout of the AIP minor frame words.

(6) Data Clock - clocks the instrument output data into the AIP.

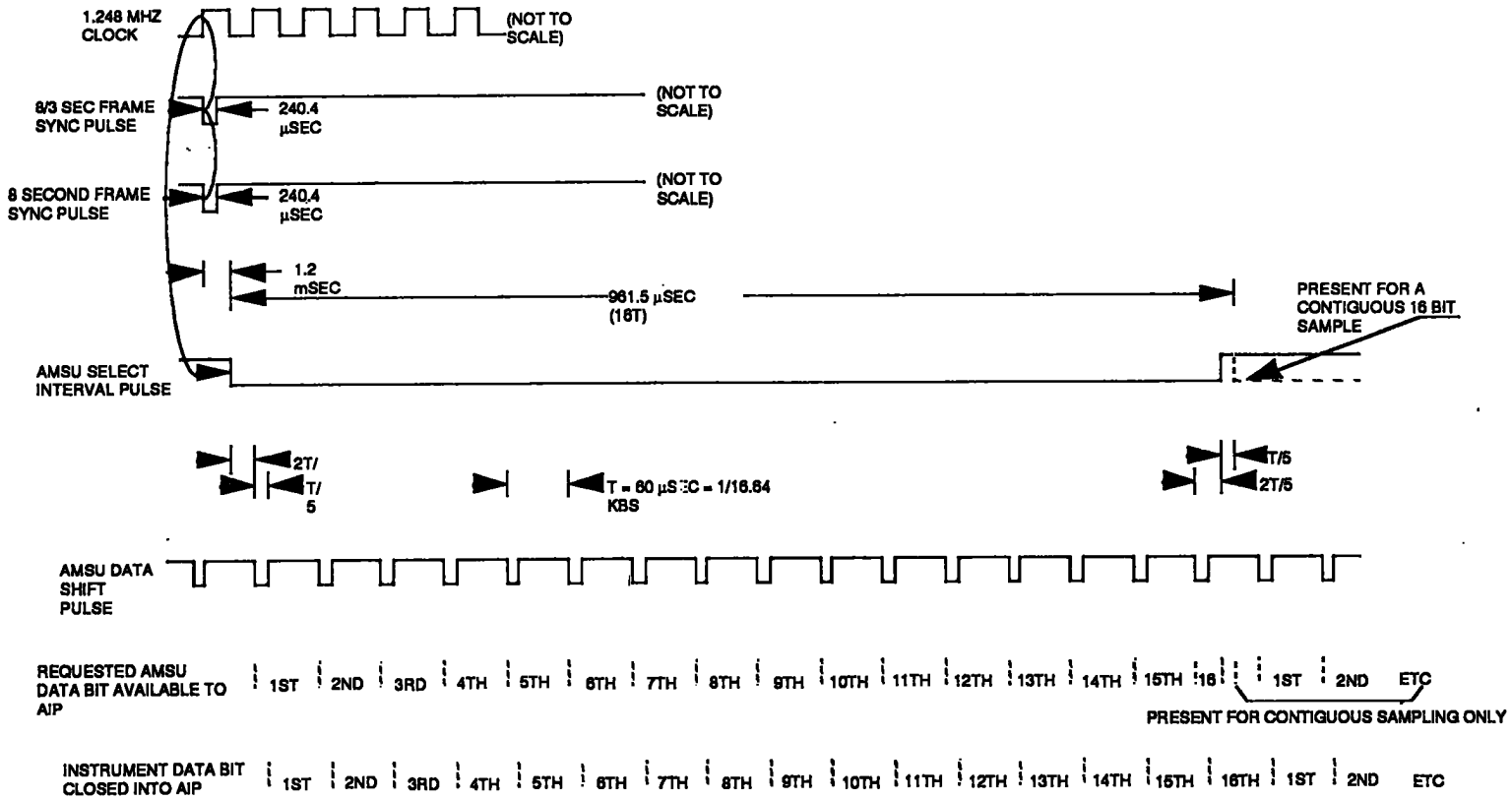

Figure 18.5-18(a). AIP Digital Interface (16.64 KBS)

Notes:
(1) LOGIC 1 (ACTIVE LEVEL) = GROUND.
(2) INSTRUMENT DATA OUTPUT INTERFACE TO BE ACTIVE ONLY DURING SELECT INTERVAL PERIOD.
(3) TIROS-K STANDARD FAST INTERFACE WILL BE USED FOR TRANSFER OF ALL DATA AND CONTROL SIGNALS.
(4) GROUND REFERENCED TO INTERFACE GROUND.
(5) AMSU SELECT AND SHIFT PULSES ARE CLOCKED BY LOW TO HIGH TRANSITION OF THE 1.248MHz CLOCK AND BY THE HIGH TO LOW TRANSITION OF THE 8 SECOND SYNC PULSE.
(6) DELAY FROM THE 8 SEC SYNC PULSE TO THE AMSU SELECT INTERVAL PULSE IS 1.23MSEC +/- 30µSEC FOR A1, 13.73MSEC +/- 30µSEC FOR A2, AND 20.43MSEC +/- 30µSEC FOR B.

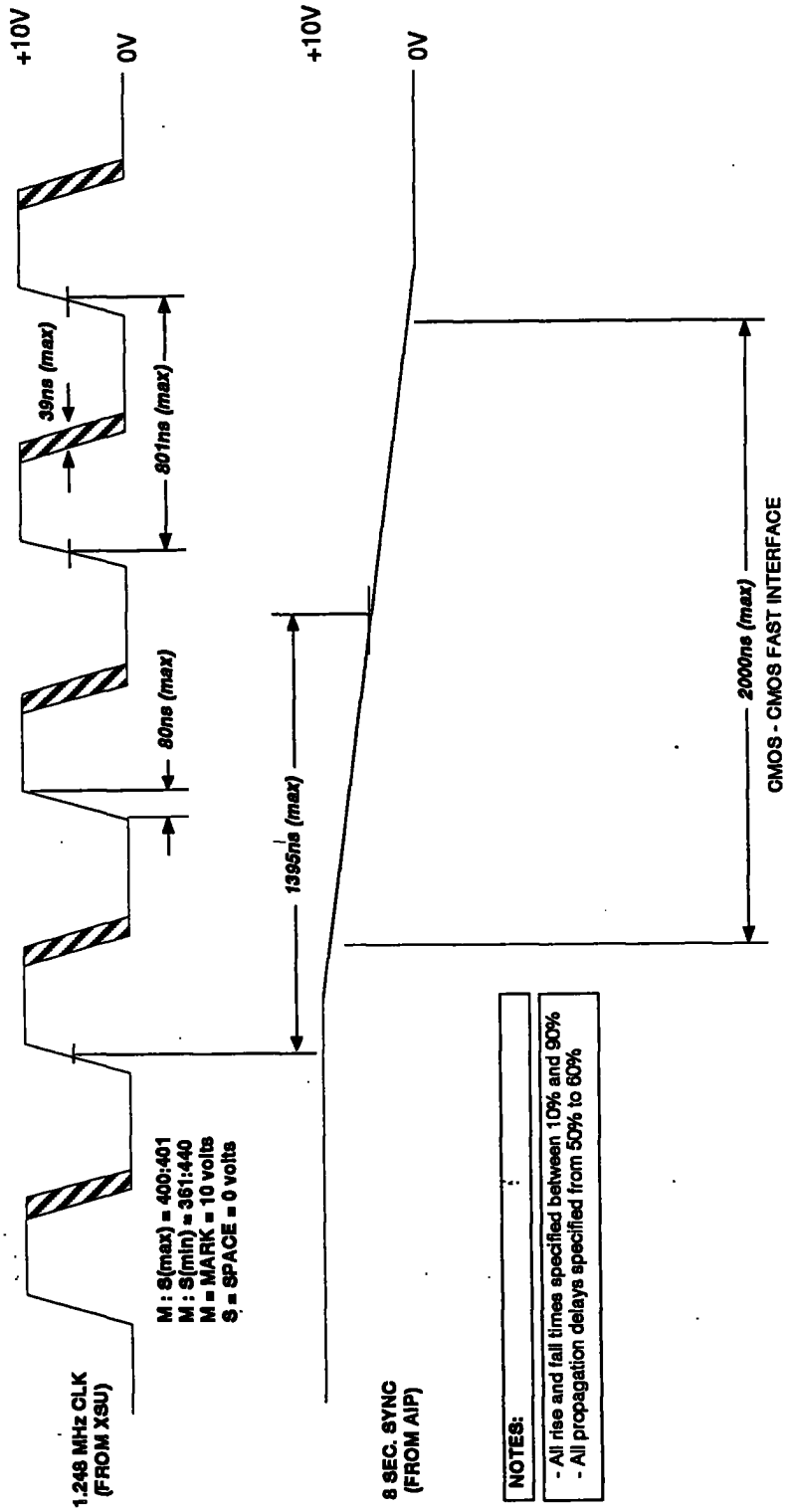

Figure 18.5-18(b). Spacecraft Clock to 8 Second Sync Skew

Clock	Signal Characteristics	Standard Interface	Interface Logic Element	Source	Function
1.248 MHz	Section 3.1.4.2.3*	High Speed	CD 4000B Series	XSU	See Section 18.5.4.1
*See Referenced Paragraph in IS-3267415					

Figure 18.5-19. Spacecraft/AMSU-B Clock Interfaces.

Sync	Repetition Rate	Pulse Width	Standard Interface**	Source
Data Enable	25/100 sec	961.5 µsec	B	AIP
Data Clock	16.64 KHz	60 µsec	B	AIP
8 sec sync	8 sec	240.4 µsec	B	AIP
** Interface circuits are A = slow, B = fast				
NOTE: AMSU-B shall not be enabled during the first and last AIP minor frames (1 and 80)				

Figure 18.5-20. Spacecraft/AMSU-B Synchronization Signal Interfaces.

18.5.4.3 AIP Switchover

The AMSU-B will continue to operate to specification if one side of the AIP fails; however, if the redundant side starts-up with a random phase 8 second sync with respect to the original sync, the scan will be out of sync. The AMSU-B software will detect the error and set a flag in the digital telemetry A01 word indicating an error.

18.5.5 INSTRUMENT TELEMETRY

18.5.5.1 Introduction

The telemetry supplied by the instrument to the spacecraft are divided into three categories - Analog Telemetry, Digital "B" Telemetry and Digital "A" Data. The specific signals supplied by the AMSU-B are detailed in the following paragraphs.

18.5.5.2 Analog Telemetry

A 16 second subcom generated by the TIROS Information Processor is used to sample all AMSU-B analog telemetry. The Analog Telemetry Points used by the AMSU-B are shown in Figure 18.5-21. The AMSU-B is provided with 18 Analog Telemetry channels to monitor health and safety.

No.	Telemetry Point Name	Channel No.	Range**	(subcom)
1	+12V (A) Secondary	16AN160	12 ± 0.72V	279(16-1)
2	-12V (A) Secondary	A16A109	-12 ± 0.72V	493(16-2)
3	+15V (A) Secondary	A16A112	15 ± 0.15V	496(16-2)
4	-15V (A) Secondary	A16A116	-15 ± 0.15V	500(16-2)
5	+8V (A) Secondary	A16A117	8.0 ± 0.1V	501(16-2)
6	+5V (D) Secondary	A16A120	5.0 ± 0.3V	504(16-2)
7	+5 (A) Secondary	A16A123	5.0 ± 0.3V	507(16-2)
8	-5V (A) Secondary	A16A124	-5.0 ± 0.3V	508(16-2)
9	+5V Reference Secondary	A16A125	5.0 ± 0.05V	509(16-2)
10	ICE Temperature	16AN16	23.3 ± 3.5°C	317(16-1)
11	MDE Temperature	16AN17	23.1 ± 3.5°C	333(16-1)
12	PEU Temperature	16AN80	25.2 ± 3.5°C	365(16-1)
13	PSU Temperature	16AN81	32.5 ± 3.5°C	373(16-1)
14	Scan Motor Temperature	16AN8	22.3 ± 3.4°C	381(16-1)
15	Scan Motor Current	A16A63	0.1 to 2.9A	447(16-2)
16	Local Oscillator Temperature Ch 16*	A16A99	33.0 ± 5.0°C	483(16-2)
17	Local Oscillator Temperature Ch 17*	A16A100	33.0 ± 5.0°C	484(16-2)
18	Local Oscillator Temperature Ch 18/19/20*	A16A101	33.0 ± 5.0°C	485(16-2)

*Powered by the +28V Analog TLM Bus.
**Unique to each flight model. Above is for FM-1.

Figure 18.5-21. AMSU-B Analog Telemetry.

18.5.5.3 Digital "B" Telemetry

The Digital B one-bit status telemetry is available at the instrument interface at all times. The 3.2 second subcoms generated by the TIROS Information Processor will sample each Digital B telemetry point once every 3.2 seconds. The AMSU-B instrument is provided with 16 Digital B telemetry points. The Digital B Telemetry Points provided are shown in Figure 18.5-22.

No.	Telemetry Point Name	State		Channel No.
		Logic "1"	Logic "0"	
1	Power ON/OFF	ON	OFF	119
2	Survival Heater ON/OFF	ON	OFF	126
3	Scan Normal Mode	YES	NO	127
4	Park in Target View	YES	NO	134
5	Park in Nadir View	YES	NO	151
6	Park in Space View	YES	NO	158
7	Investigation Mode	YES	NO	166
8	Stepped Mode	YES	NO	182
9	Channel 16 ON/OFF	ON	OFF	187
10	Channel 17 ON/OFF	ON	OFF	190
11	Channel 18/19/20 ON/OFF	ON	OFF	191
12	Space View Select (MSB)	Logic 1	Logic 0	197
13	Space View Select (LSB)	Logic 1	Logic 0	213
14	Memory Checks Status	Enabled	Disabled	246
15	ROM Check Flag	Failed	Passed	249
16	RAM Check Flag	Failed	Passed	255

Figure 18.5-22. Digital "B" Telemetry.

18.5.5.4 Digital "A" Telemetry

Digital "A" Data is clocked into the spacecraft AIP at a 16.64 kbps rate by the shift pulse whenever the Data Enable Pulse is presented to the instrument. The AMSU-B data is in the AIP minor frame words 48 through 97. The AIP reads the digital data output from the AMSU-B in 16 bit words.

The AMSU-B telemetry format consists of 78 minor frames of data. Minor frames 1 and 80 in each 8 second cycle are blank: i.e. no data is available in the PEU digital data FIFO during the first and last minor frames of each 8 second format. The 78 minor frames are organized as three blocks of 650 words as follows (representing one scan of the instrument):

36 spare words

540 words of Earth view pixel data
(90 x (5 channels + shaft position at mid-pixel))

26 words of housekeeping data

48 words of space view and target view data
(2 x 4 x (5 channels + shaft position))

This structure is maintained for all modes. In static modes, all pixel data locations contain the pixel data for the current antenna position.

The AMSU-B digital format is synchronized to the 8 second synchronization pulse. During each minor frame, 25 words of data are available in the PEU O/P FIFO within 16.7 ms of the start of the minor frame (except in frames 1 and 80). Figure 18.5-23 shows the AMSU-B digital A data format. Descriptions of the digital A data words are provided in Figure 18.5-24.

Word Length: 16 bits

Serial Output: 25 - 16 bit words per 100 sec (MSB first)

MINOR FRAME	1	2	3	4	5	6	7	8	9	10
WORD 01		SP1	SP26	17/03	18/07	19/11	20/15	P/20	16/24	17/28
WORD 02		SP2	SP27	18/03	19/07	20/11	P/16	16/20	17/24	18/28
WORD 03		SP3	SP28	19/03	20/07	P/12	16/16	17/20	18/24	19/28
WORD 04		SP4	SP29	20/03	P/08	16/12	17/16	18/20	19/24	20/28
WORD 05		SP5	SP30	P/04	16/08	17/12	18/16	19/20	20/24	P/29
WORD 06		SP6	SP31	16/04	17/08	18/12	19/16	20/20	P/25	16/29
WORD 07		SP7	SP32	17/04	18/08	19/12	20/16	P/21	16/25	17/29
WORD 08		SP8	SP33	18/04	19/08	20/12	P/17	16/21	17/25	18/29
WORD 09		SP9	SP34	19/04	20/08	P/13	16/17	17/21	18/25	19/29
WORD 10		SP10	SP35	20/04	P/09	16/13	17/17	18/21	19/25	20/29
WORD 11		SP11	SP36	P/05	16/09	17/13	18/17	19/21	20/25	P/30
WORD 12		SP12	P/01	16/05	17/09	18/13	19/17	20/21	P/26	16/30
WORD 13	BLANK	SP13	16/01	17/05	18/09	19/13	20/17	P/22	16/26	17/30
WORD 14		SP14	17/01	18/05	19/09	20/13	P/18	16/22	17/26	18/30
WORD 15		SP15	18/01	19/05	20/09	P/14	16/18	17/22	18/26	19/30
WORD 16		SP16	19/01	20/05	P/10	16/14	17/18	18/22	19/26	20/30
WORD 17		SP17	20/01	P/06	16/10	17/14	18/18	19/22	20/26	P/31
WORD 18		SP18	P/02	16/06	17/10	18/14	19/18	20/22	P/27	16/31
WORD 19		SP19	16/02	17/06	18/10	19/14	20/18	P/23	16/27	17/31
WORD 20		SP20	17/02	18/06	19/10	20/14	P/19	16/23	17/27	18/31
WORD 21		SP21	18/02	19/06	20/10	P/15	16/19	17/23	18/27	19/31
WORD 22		SP22	19/02	20/06	P/11	16/15	17/19	18/23	19/27	20/31
WORD 23		SP23	20/02	P/07	16/11	17/15	18/19	19/23	20/27	P/32
WORD 24		SP24	P/03	16/07	17/11	18/15	19/19	20/23	P/28	16/32
WORD 25		SP25	16/03	17/07	18/11	19/15	20/19	P/24	16/28	17/32

MINOR FRAME	11	12	13	14	15	16	17	18	19	20
WORD 01	18/32	19/36	20/40	P/45	16/49	17/53	18/57	19/61	20/65	P/70
WORD 02	19/32	20/36	P/41	16/45	17/49	18/53	19/57	20/61	P/66	16/70
WORD 03	20/32	P/37	16/41	17/45	18/49	19/53	20/57	P/62	16/66	17/70
WORD 04	P/33	16/37	17/41	18/45	19/49	20/53	P/58	16/62	17/66	18/70
WORD 05	16/33	17/37	18/41	19/45	20/49	P/54	16/58	17/62	18/66	19/70
WORD 06	17/33	18/37	19/41	20/45	P/50	16/54	17/58	18/62	19/66	20/70
WORD 07	18/33	19/37	20/41	P/46	16/50	17/54	18/58	19/62	20/66	P/71
WORD 08	19/33	20/37	P/42	16/46	17/50	18/54	19/58	20/62	P/67	16/71
WORD 09	20/33	P/38	16/42	17/46	18/50	19/54	20/58	P/63	16/67	17/71
WORD 10	P/34	16/38	17/42	18/46	19/50	20/54	P/59	16/63	17/67	18/71
WORD 11	16/34	17/38	18/42	19/46	20/50	P/55	16/59	17/63	18/67	19/71
WORD 12	17/34	18/38	19/42	20/46	P/51	16/55	17/59	18/63	19/67	20/71
WORD 13	18/34	19/38	20/42	P/47	16/51	17/55	18/59	19/63	20/67	P/72
WORD 14	19/34	20/38	P/43	16/47	17/51	18/55	19/59	20/63	P/68	16/72
WORD 15	20/34	P/39	16/43	17/47	18/51	19/55	20/59	P/64	16/68	17/72
WORD 16	P/35	16/39	17/43	18/47	19/51	20/55	P/60	16/64	17/68	18/72
WORD 17	16/35	17/39	18/43	19/47	20/51	P/56	16/60	17/64	18/68	19/72
WORD 18	17/35	18/39	19/43	20/47	P/52	16/56	17/60	18/64	19/68	20/72
WORD 19	18/35	19/39	20/43	P/48	16/52	17/56	18/60	19/64	20/68	P/73
WORD 20	19/35	20/39	P/44	16/48	17/52	18/56	19/60	20/64	P/69	16/73
WORD 21	20/35	P/40	16/44	17/48	18/52	19/56	20/60	P/65	16/69	17/73
WORD 22	P/36	16/40	17/44	18/48	19/52	20/56	P/61	16/65	17/69	18/73
WORD 23	16/36	17/40	18/44	19/48	20/52	P/57	16/61	17/65	18/69	19/73
WORD 24	17/36	18/40	19/44	20/48	P/53	16/57	17/61	18/65	19/69	20/73
WORD 25	18/36	19/40	20/44	P/49	16/53	17/57	18/61	19/65	20/69	P/74

Figure 18.5-23. AMSU-B Data Format.

MINOR FRAME	21	22	23	24	25	26	27	28	29	30
WORD 01	16/74	17/78	18/82	19/86	20/90	A25	20/S4	SP1	TST09	17/03
WORD 02	17/74	18/78	19/82	20/86	A01	A26	P/T1	SP2	TST10	18/03
WORD 03	18/74	19/78	20/82	P/87	A02	P/S1	16/T1	SP3	TST11	19/03
WORD 04	19/74	20/78	P/83	16/87	A03	16/S1	17/T1	SP4	TST12	20/03
WORD 05	20/74	P/79	16/83	17/87	A04	17/S1	18/T1	SP5	TST13	P/04
WORD 06	P/75	16/79	17/83	18/87	A05	18/S1	19/T1	SP6	TST14	16/04
WORD 07	16/75	17/79	18/83	19/87	A06	19/S1	20/T1	SP7	TST15	17/04
WORD 08	17/75	18/79	19/83	20/87	A07	20/S1	P/T2	SP8	TST16	18/04
WORD 09	18/75	19/79	20/83	P/88	A08	P/S2	16/T2	SP9	TST17	19/04
WORD 10	19/75	20/79	P/84	16/88	A09	16/S2	17/T2	SP10	TST18	20/04
WORD 11	20/75	P/80	16/84	17/88	A10	17/S2	18/T2	SP11	TST19	P/05
WORD 12	P/76	16/80	17/84	18/88	A11	18/S2	19/T2	SP12	P/01	16/05
WORD 13	16/76	17/80	18/84	19/88	A12	19/S2	20/T2	SP13	16/01	17/05
WORD 14	17/76	18/80	19/84	20/88	A13	20/S2	P/T3	SP14	17/01	18/05
WORD 15	18/76	19/80	20/84	P/89	A14	P/S3	16/T3	SP15	18/01	19/05
WORD 16	19/76	20/80	P/85	16/89	A15	16/S3	17/T3	SP16	19/01	20/05
WORD 17	20/76	P/81	16/85	17/89	A16	17/S3	18/T3	SP17	20/01	P/06
WORD 18	P/77	16/81	17/85	18/89	A17	18/S3	19/T3	TST01	P/02	16/06
WORD 19	16/77	17/81	18/85	19/89	A18	19/S3	20/T3	TST02	16/02	17/06
WORD 20	17/77	18/81	19/85	20/89	A19	20/S3	P/T4	TST03	17/02	18/06
WORD 21	18/77	19/81	20/85	P/90	A20	P/S4	16/T4	TST04	18/02	19/06
WORD 22	19/77	20/81	P/86	16/90	A21	16/S4	17/T4	TST05	19/02	20/06
WORD 23	20/77	P/82	16/86	17/90	A22	17/S4	18/T4	TST06	20/02	P/07
WORD 24	P/78	16/82	17/86	18/90	A23	18/S4	19/T4	TST07	P/03	16/07
WORD 25	16/78	17/82	18/86	19/90	A24	19/S4	20/T4	TST08	16/03	17/07

MINOR FRAME	31	32	33	34	35	36	37	38	39	40
WORD 01	18/07	19/11	20/15	P/20	16/24	17/28	18/32	19/36	20/40	P/45
WORD 02	19/07	20/11	P/16	16/20	17/24	18/28	19/32	20/36	P/41	16/45
WORD 03	20/07	P/12	16/16	17/20	18/24	19/28	20/32	P/37	16/41	17/45
WORD 04	P/08	16/12	17/16	18/20	19/24	20/28	P/33	16/37	17/41	18/45
WORD 05	16/08	17/12	18/16	19/20	20/24	P/29	16/33	17/37	18/41	19/45
WORD 06	17/08	18/12	19/16	20/20	P/25	16/29	17/33	18/37	19/41	20/45
WORD 07	18/08	19/12	20/16	P/21	16/25	17/29	18/33	19/37	20/41	P/46
WORD 08	19/08	20/12	P/17	16/21	17/25	18/29	19/33	20/37	P/42	16/46
WORD 09	20/08	P/13	16/17	17/21	18/25	19/29	20/33	P/38	16/42	17/46
WORD 10	P/09	16/13	17/17	18/21	19/25	20/29	P/34	16/38	17/42	18/46
WORD 11	16/09	17/13	18/17	19/21	20/25	P/30	16/34	17/38	18/42	19/46
WORD 12	17/09	18/13	19/17	20/21	P/26	16/30	17/34	18/38	19/42	20/46
WORD 13	18/09	19/13	20/17	P/22	16/26	17/30	18/34	19/38	20/42	P/47
WORD 14	19/09	20/13	P/18	16/22	17/26	18/30	19/34	20/38	P/43	16/47
WORD 15	20/09	P/14	16/18	17/22	18/26	19/30	20/34	P/39	16/43	17/47
WORD 16	P/10	16/14	17/18	18/22	19/26	20/30	P/35	16/39	17/43	18/47
WORD 17	16/10	17/14	18/18	19/22	20/26	P/31	16/35	17/39	18/43	19/47
WORD 18	17/10	18/14	19/18	20/22	P/27	16/31	17/35	18/39	19/43	20/47
WORD 19	18/10	19/14	20/18	P/23	16/27	17/31	18/35	19/39	20/43	P/48
WORD 20	19/10	20/14	P/19	16/23	17/27	18/31	19/35	20/39	P/44	16/48
WORD 21	20/10	P/15	16/19	17/23	18/27	19/31	20/35	P/40	16/44	17/48
WORD 22	P/11	16/15	17/19	18/23	19/27	20/31	P/36	16/40	17/44	18/48
WORD 23	16/11	17/15	18/19	19/23	20/27	P/32	16/36	17/40	18/44	19/48
WORD 24	17/11	18/15	19/19	20/23	P/28	16/32	17/36	18/40	19/44	20/48
WORD 25	18/11	19/15	20/19	P/24	16/28	17/32	18/36	19/40	20/44	P/49

Figure 18.5-23. AMSU-B Data Format (Continued).

MINOR FRAME	41	42	43	44	45	46	47	48	49	50
WORD 01	16/49	17/53	18/57	19/61	20/65	P/70	16/74	17/78	18/82	19/86
WORD 02	17/49	18/53	19/57	20/61	P/66	16/70	17/74	18/78	19/82	20/86
WORD 03	18/49	19/53	20/57	P/62	16/66	17/70	18/74	19/78	20/82	P/87
WORD 04	19/49	20/53	P/58	16/62	17/66	18/70	19/74	20/78	P/83	16/87
WORD 05	20/49	P/54	16/58	17/62	18/66	19/70	20/74	P/79	16/83	17/87
WORD 06	P/50	16/54	17/58	18/62	19/66	20/70	P/75	16/79	17/83	18/87
WORD 07	16/50	17/54	18/58	19/62	20/66	P/71	16/75	17/79	18/83	19/87
WORD 08	17/50	18/54	19/58	20/62	P/67	16/71	17/75	18/79	19/83	20/87
WORD 09	18/50	19/54	20/58	P/63	16/67	17/71	18/75	19/79	20/83	P/88
WORD 10	19/50	20/54	P/59	16/63	17/67	18/71	19/75	20/79	P/84	16/88
WORD 11	20/50	P/55	16/59	17/63	18/67	19/71	20/75	P/80	16/84	17/88
WORD 12	P/51	16/55	17/59	18/63	19/67	20/71	P/76	16/80	17/84	18/88
WORD 13	16/51	17/55	18/59	19/63	20/67	P/72	16/76	17/80	18/84	19/88
WORD 14	17/51	18/55	19/59	20/63	P/68	16/72	17/76	18/80	19/84	20/88
WORD 15	18/51	19/55	20/59	P/64	16/68	17/72	18/76	19/80	20/84	P/89
WORD 16	19/51	20/55	P/60	16/64	17/68	18/72	19/76	20/80	P/85	16/89
WORD 17	20/51	P/56	16/60	17/64	18/68	19/72	20/76	P/81	16/85	17/89
WORD 18	P/52	16/56	17/60	18/64	19/68	20/72	P/77	16/81	17/85	18/89
WORD 19	16/52	17/56	18/60	19/64	20/68	P/73	16/77	17/81	18/85	19/89
WORD 20	17/52	18/56	19/60	20/64	P/69	16/73	17/77	18/81	19/85	20/89
WORD 21	18/52	19/56	20/60	P/65	16/69	17/73	18/77	19/81	20/85	P/90
WORD 22	19/52	20/56	P/61	16/65	17/69	18/73	19/77	20/81	P/86	16/90
WORD 23	20/52	P/57	16/61	17/65	18/69	19/73	20/77	P/82	16/86	17/90
WORD 24	P/53	16/57	17/61	18/65	19/69	20/73	P/78	16/82	17/86	18/90
WORD 25	16/53	17/57	18/61	19/65	20/69	P/74	16/78	17/82	18/86	19/90

MINOR FRAME	51	52	53	54	55	56	57	58	59	60
WORD 01	20/90	A25	20/S4	SP1	TST09	17/03	18/07	19/11	20/15	P/20
WORD 02	A01	A26	P/T1	SP2	TST10	18/03	19/07	20/11	P/16	16/20
WORD 03	A02	P/S1	16/T1	SP3	TST11	19/03	20/07	P/12	16/16	17/20
WORD 04	A03	16/S1	17/T1	SP4	TST12	20/03	P/08	16/12	17/16	18/20
WORD 05	A04	17/S1	18/T1	SP5	TST13	P/04	16/08	17/12	18/16	19/20
WORD 06	A05	18/S1	19/T1	SP6	TST14	16/04	17/08	18/12	19/16	20/20
WORD 07	A06	19/S1	20/T1	SP7	TST15	17/04	18/08	19/12	20/16	P/21
WORD 08	A07	20/S1	P/T2	SP8	TST16	18/04	19/08	20/12	P/17	16/21
WORD 09	A08	P/S2	16/T2	SP9	TST17	19/04	20/08	P/13	16/17	17/21
WORD 10	A09	16/S2	17/T2	SP10	TST18	20/04	P/09	16/13	17/17	18/21
WORD 11	A10	17/S2	18/T2	SP11	TST19	P/05	16/09	17/13	18/17	19/21
WORD 12	A11	18/S2	19/T2	SP12	P/01	16/05	17/09	18/13	19/17	20/21
WORD 13	A12	19/S2	20/T2	SP13	16/01	17/05	18/09	19/13	20/17	P/22
WORD 14	A13	20/S2	P/T3	SP14	17/01	18/05	19/09	20/13	P/18	16/22
WORD 15	A14	P/S3	16/T3	SP15	18/01	19/05	20/09	P/14	16/18	17/22
WORD 16	A15	16/S3	17/T3	SP16	19/01	20/05	P/10	16/14	17/18	18/22
WORD 17	A16	17/S3	18/T3	SP17	20/01	P/06	16/10	17/14	18/18	19/22
WORD 18	A17	18/S3	19/T3	TST01	P/02	16/06	17/10	18/14	19/18	20/22
WORD 19	A18	19/S3	20/T3	TST02	16/02	17/06	18/10	19/14	20/18	P/23
WORD 20	A19	20/S3	P/T4	TST03	17/02	18/06	19/10	20/14	P/19	16/23
WORD 21	A20	P/S4	16/T4	TST04	18/02	19/06	20/10	P/15	16/19	17/23
WORD 22	A21	16/S4	17/T4	TST05	19/02	20/06	P/11	16/15	17/19	18/23
WORD 23	A22	17/S4	18/T4	TST06	20/02	P/07	16/11	17/15	18/19	19/23
WORD 24	A23	18/S4	19/T4	TST07	P/03	16/07	17/11	18/15	19/19	20/23
WORD 25	A24	19/S4	20/T4	TST08	16/03	17/07	18/11	19/15	20/19	P/24

Figure 18.5-23. AMSU-B Data Format (Continued).

MINOR FRAME	61	62	63	64	65	66	67	68	69	70
WORD 01	16/24	17/28	18/32	19/36	20/40	P/45	16/49	17/53	18/57	19/61
WORD 02	17/24	18/28	19/32	20/36	P/41	16/45	17/49	18/53	19/57	20/61
WORD 03	18/24	19/28	20/32	P/37	16/41	17/45	18/49	19/53	20/57	P/62
WORD 04	19/24	20/28	P/33	16/37	17/41	18/45	19/49	20/53	P/58	16/62
WORD 05	20/24	P/29	16/33	17/37	18/41	19/45	20/49	P/54	16/58	17/62
WORD 06	P/25	16/29	17/33	18/37	19/41	20/45	P/50	16/54	17/58	18/62
WORD 07	16/25	17/29	18/33	19/37	20/41	P/46	16/50	17/54	18/58	19/62
WORD 08	17/25	18/29	19/33	20/37	P/42	16/46	17/50	18/54	19/58	20/62
WORD 09	18/25	19/29	20/33	P/38	16/42	17/46	18/50	19/54	20/58	P/63
WORD 10	19/25	20/29	P/34	16/38	17/42	18/46	19/50	20/54	P/59	16/63
WORD 11	20/25	P/30	16/34	17/38	18/42	19/46	20/50	P/55	16/59	17/63
WORD 12	P/26	16/30	17/34	18/38	19/42	20/46	P/51	16/55	17/59	18/63
WORD 13	16/26	17/30	18/34	19/38	20/42	P/47	16/51	17/55	18/59	19/63
WORD 14	17/26	18/30	19/34	20/38	P/43	16/47	17/51	18/55	19/59	20/63
WORD 15	18/26	19/30	20/34	P/39	16/43	17/47	18/51	19/55	20/59	P/64
WORD 16	19/26	20/30	P/35	16/39	17/43	18/47	19/51	20/55	P/60	16/64
WORD 17	20/26	P/31	16/35	17/39	18/43	19/47	20/51	P/56	16/60	17/64
WORD 18	P/27	16/31	17/35	18/39	19/43	20/47	P/52	16/56	17/60	18/64
WORD 19	16/27	17/31	18/35	19/39	20/43	P/48	16/52	17/56	18/60	19/64
WORD 20	17/27	18/31	19/35	20/39	P/44	16/48	17/52	18/56	19/60	20/64
WORD 21	18/27	19/31	20/35	P/40	16/44	17/48	18/52	19/56	20/60	P/65
WORD 22	19/27	20/31	P/36	16/40	17/44	18/48	19/52	20/56	P/61	16/65
WORD 23	20/27	P/32	16/36	17/40	18/44	19/48	20/52	P/57	16/61	17/65
WORD 24	P/28	16/32	17/36	18/40	19/44	20/48	P/53	16/57	17/61	18/65
WORD 25	16/28	17/32	18/36	19/40	20/44	P/49	16/53	17/57	18/61	19/65

MINOR FRAME	71	72	73	74	75	76	77	78	79	80
WORD 01	20/65	P/70	16/74	17/78	18/82	19/86	20/90	A25	20/S4	
WORD 02	P/66	16/70	17/74	18/78	19/82	20/86	A01	A26	P/T1	
WORD 03	16/66	17/70	18/74	19/78	20/82	P/87	A02	P/S1	16/T1	
WORD 04	17/66	18/70	19/74	20/78	P/83	16/87	A03	16/S1	17/T1	
WORD 05	18/66	19/70	20/74	P/79	16/83	17/87	A04	17/S1	18/T1	
WORD 06	19/66	20/70	P/75	16/79	17/83	18/87	A05	18/S1	19/T1	
WORD 07	20/66	P/71	16/75	17/79	18/83	19/87	A06	19/S1	20/T1	
WORD 08	P/67	16/71	17/75	18/79	19/83	20/87	A07	20/S1	P/T2	
WORD 09	16/67	17/71	18/75	19/79	20/83	P/88	A08	P/S2	16/T2	
WORD 10	17/67	18/71	19/75	20/79	P/84	16/88	A09	16/S2	17/T2	
WORD 11	18/67	19/71	20/75	P/80	16/84	17/88	A10	17/S2	18/T2	
WORD 12	19/67	20/71	P/76	16/80	17/84	18/88	A11	18/S2	19/T2	
WORD 13	20/67	P/72	16/76	17/80	18/84	19/88	A12	19/S2	20/T2	BLANK
WORD 14	P/68	16/72	17/76	18/80	19/84	20/88	A13	20/S2	P/T3	
WORD 15	16/68	17/72	18/76	19/80	20/84	P/89	A14	P/S3	16/T3	
WORD 16	17/68	18/72	19/76	20/80	P/85	16/89	A15	16/S3	17/T3	
WORD 17	18/68	19/72	20/76	P/81	16/85	17/89	A16	17/S3	18/T3	
WORD 18	19/68	20/72	P/77	16/81	17/85	18/89	A17	18/S3	19/T3	
WORD 19	20/68	P/73	16/77	17/81	18/85	19/89	A18	19/S3	20/T3	
WORD 20	P/69	16/73	17/77	18/81	19/85	20/89	A19	20/S3	P/T4	
WORD 21	16/69	17/73	18/77	19/81	20/85	P/90	A20	P/S4	16/T4	
WORD 22	17/69	18/73	19/77	20/81	P/86	16/90	A21	16/S4	17/T4	
WORD 23	18/69	19/73	20/77	P/82	16/86	17/90	A22	17/S4	18/T4	
WORD 24	19/69	20/73	P/78	16/82	17/86	18/90	A23	18/S4	19/T4	
WORD 25	20/69	P/74	16/78	17/82	18/86	19/90	A24	19/S4	20/T4	

Figure 18.5-23. AMSU-B Data Format (Continued).

NOTES:

1) The format consist of minor frames (1 to 80). Minor frames 1 and 80 are blank. This means that no data is available in the PEU output FIFO for reading by the AIP and therefore the AIP should not send any sample pulses to AMSU-B during these minor frame periods.

2) The following key applies:

SP	:	Spare word (Data is 5555H except for spare words 34 to 36)
TSTxx	:	Test Data
P/n	:	Shaft position at mid-integration time for FOV n.
16/n	:	Integrated output for channel 16 for FOV n.
17/n	:	Integrated output for channel 17 for FOV n.
18/n	:	Integrated output for channel 18 for FOV n.
19/n	:	Integrated output for channel 19 for FOV n.
20/n	:	Integrated output for channel 20 for FOV n.
/Sn	:	Space view FOV n.
/Tn	:	Internal Target view FOV n.
AXX	:	Multiplexed Housekeeping data.

3) The format structure and definition is identical for all modes. In scanning modes, n, Sn & Tn represent pixel identification. In static modes, n, Sn & Tn have no meaning; all data values relate to the IFOV.

Figure 18.5-23. AMSU-B Data Format (Continued).

Digital sub-multiplexed channels	
A01	Unit ID + Flags
A02	Digital B Telemetry
A03	Mixer 16 temperature
A04	Mixer 17 temperature
A05	Mixer 18/19/20 temperature
A06	FET amplifier 16 temperature
A07	FET amplifier 17 temperature
A08	FET amplifier 18 temperature
A09	FET amplifier 19 temperature
A10	FET amplifier 20 temperature
A11	Calibration target temperature 1
A12	Calibration target temperature 2
A13	Calibration target temperature 3
A14	Calibration target temperature 4
A15	Calibration target temperature 5
A16	Calibration target temperature 6
A17	Calibration target temperature 7
A18	Sub-reflector temperature 1
A19	Local Oscillator Monitor Current 16
A20	Local Oscillator Monitor Current 17
A21	Local Oscillator Monitor Current 18/19/20
A22	Local Oscillator 16 temperature
A23	Local Oscillator 17 temperature
A24	Local Oscillator 18/19/20 temperature
A25	PRT Bridge Voltage
A26	PRT Board Temperature
Bit	A01
00	Module ID (LSB)
01	Module ID
02	Module ID
03	Module ID
04	Module ID
05	Module ID
06	Module ID
07	Module ID (MSB)
08	Mode Transition Flag
09	Scan Synchronization
10	Pixel Data Invalid Flag
11	Scan Control Status
12	Processor Check Flag
13	Not Defined
14	Not Defined
15 (MSB)	MDE Power ON/OFF (Relay 6 Status)

Module Identification (Bits 00 to 07)		
Unit Number	Identification No.	
	(MSB)	(LSB)
EM	0000	0000
PFM	0000	0100
FM2	0000	1000
FM3	0000	1100

Figure 18.5-24. AMSU-B Data Word Description.

Mode Transition (Bit 08)	
0	Transition Complete
1	Transition in progress
Scan Synchronization (Bit 09)	
0	Error <0.1 degree at 8 sec. sync pulse
1	Error ≥ 0.1 degree at 8 sec. sync pulse
Pixel Data Invalid (Bit 10)	
0	Valid
1	Invalid
Scan Control Status (Bit 11)	
0	Running
1	Aborted
Processor Check (Bit 12)	
0	Built-In-Test passed
1	Built-In-Test failed

Bit		A02**
00	(LSB)	Power ON/OFF (Relay 1 status)
01		Survival Heater ON/OFF (Relay 2 status)
02		Scan Normal Mode
03		Park in Target View Mode
04		Park in Nadir View Mode
05		Park in Space View Mode
06		Investigation Mode
07		Stepped Mode
08		Channel 16 ON/OFF (Relay 3 status)
09		Channel 17 ON/OFF (Relay 4 status)
10		Channel 18/19/20 ON/OFF (Relay 5 status)
11		Space View Select (MSB)
12		Space View Select (LSB)
13		Memory Checks Status
14		ROM Check Flag
15	(MSB)	RAM Check Flag

**Note: A "1" status indicates "ON" and "0" status indicates "OFF".

Figure 18.5-24. AMSU-B Data Word Description (Continued).

18.5.6 COMMANDS

18.5.6.1 General

The spacecraft provides the command inputs listed below to the AMSU-B. The general characteristics of these commands are detailed in General Instrument Interface Specification (IS-3267415).

The AMSU-B is provided with 10 pulse discrete and 6 level discrete commands. The total number of commands required by the AMSU-B is 16. All commands are verified through telemetry; major commands are verified through Digital B telemetry. The spacecraft level command mnemonics are provided in Figure 18.5-25.

For "Level" commands, the "ON", "TRUE" or "LOW" level will be indicated by a logic "1" or zero-volt level. The "OFF", "FALSE" or "HIGH" level will be indicated by a logic "0" or +10 volt level for CMOS logic.

CMD#	Description	Command Mnemonic	Command Type	Description
1	Power ON	ABPON	Pulse	Commands power ON to all subsystems. Following a Software Initiation sequence within the AMSU-B Processing Electronics Unit, and upon receipt of a subsequent 8 sec sync pulse, the instrument will enter Scan Normal Mode within 8 seconds.
2	Power OFF	ABPOF	Pulse	Commands power OFF to all subsystems.
3	Survival Heater ON	ABSHN	Pulse	Commands the survival heater ON.
4	Survival Heater OFF	ABSHF	Pulse	Commands the survival heater OFF.
5	Scan Normal	ABSCN	Pulse	Returns the instrument to Scan Normal Mode from Park, Step or Investigation modes.
6	Park in Target View	ABPTV	Pulse	Parks the antenna in the calibration target view position.
7	Park in Nadir View	ABPNV	Pulse	Parks the antenna in the nadir view position.
8	Park in Space View	ABPSV	Pulse	Parks the antenna in the currently selected space view position.
9	Investigation Mode	ABINV	Pulse	Similar to the scan mode except that the antenna views each space view in turn in successive scans regardless of the currently selected space view.
10	Step 1 FOV	ABSTP	Pulse	Steps the antenna position forward to one pixel field-of-view (1.1°) from a previous parked position or stepped position. Step commands are processed only once per 8/3 seconds.
11	Channel 16 ON/OFF	AB16N/F	Level	Commands Channel 16 power ON or OFF.
12	Channel 17 ON/OFF	AB17N/F	Level	Commands Channel 17 power ON or OFF.
13	Channel 18/19/20 ON/OFF	AB18N/F	Level	Commands Channel 18, 19 and 20 power ON or OFF. (Note 1)
14	Space View Select (MSB) LO/HI	ABSML/H	Level	These two bits define the required space view during scan normal mode or park in space view mode (Note 2). Commands 14 and 15 must be strobed by subsequent scan normal, or park in space view commands in order to be achieved. Thus to change from park in space view 1 to park in space view 3, the code must be changed and then a further park in space view command sent.
15	Space View Select (LSB) LO/HI	ABSLL/H	Level	
16	Memory Checks Enable/Disable	ABMCE/D	Level	1. During PEU software initialization, the status of this level telecommand determines whether the PEU ROM and RAM checks are performed. 2. Following PEU Software initialization the telecommand determines whether the software will abort the scan control task in the event of prolonged restricted motor motion. In both cases: TRUE (LOW) - ENABLE FALSE (HIGH) - DISABLE (Note 3)

Note 1: All channels will be off following software initialization.

Note 2:

MSB	LSB	
High	High	View 0 (centered on -157° from +Z)
High	Low	View 1 (centered on -161° from +Z)
Low	High	View 2 (centered on -165° from +Z)
Low	Low	View 3 (centered on -169° from +Z)

Low - logic "1", zero volt level.
High - logic "0", +10 volt level

Figure 18.5-25. Spacecraft/AMSU-B Command Interfaces.

Note 3:	The instrument's electronics software telecommand processing only allows the instrument to be commanded into the Step Mode from a Parked Mode (Target View, Space View or Nadir View). If the instrument were commanded into the Step Mode from the Scan Normal Mode or Investigation Mode, then the instrument's electronics software would prevent it from being processed.

Figure 18.5-25. Spacecraft/AMSU-B Command Interfaces (Continued).

18.5.6.2 Command Sequences

Command sequences for AMSU-B operations are as follows (Mnemonics in parentheses):

18.5.6.2.1 Initial Turn-On Sequence (In-Orbit)

1) Configure level commands in accordance with the following:

Level Command	Status (Mnemonics)
ch 16 ON/OFF	OFF (AB16F)
ch 17 ON/OFF	OFF (AB17F)
ch 18/19/20 ON/OFF	OFF (AB18F)
Space view select (MSB) LO/HI	LO (ABSML)
Space view select (LSB) LO/HI	LO (ABSLL)
Memory checks EN/DIS	ENABLE (ABMCE)

2) Send Survival Heater OFF command if Survival Heater powered. (ABSHF)

3) Send Instrument ON command (Confirm TM-Dig-B). (ABPON)

4) Provided Instrument temperature is within operational constraints:

- Configure the ch 16 on/off level command to ON. Confirm configuration on Digital B Telemetry. (AB16N)
- Configure the ch 17 on/off level command to ON. Confirm configuration on Digital B Telemetry. (AB17N)
- Configure the ch 18/19/20 on/off level command to ON. Confirm configuration on Digital B Telemetry. (AB18N)

18.5.6.2.2 Normal Turn-On Sequence (Test)

1) Application of power lines: (Bench STE only)

a) 10 V Interface - ON
b) 28 V Main Bus - ON
c) 28 V Pulse Bus MTR and HTR - ON
d) 28 V ATM Bus - ON

2) Then configure per 18.5.6.2.1

18.5.6.2.3 Turn-Off Sequence (Normal)*

1) Configure the ch 18/19/20 on/off level command to OFF. Confirm configuration on Digital B Telemetry. (AB18F)

2) Configure the ch 17 on/off level command to OFF. Confirm configuration on Digital B Telemetry. (AB17F)

3) Configure the ch 16 on/off level command to OFF. Confirm configuration on Digital B Telemetry. (AB16F)

4) Send Park in Target command and confirm this state achieved. (ABPTV)

5) Send Instrument Power OFF command. (ABPOF)

6) Send Survival Heater ON command if necessary for low temperature survival. (ABSHN)

*No emergency turn-off exists; use normal sequence.

18.5.6.2.4 Safe State Sequence

1) Park antenna in internal target view position. (ABPTV)

2) Turn instrument power OFF. (ABPOF)

3) During the Launch and Early Orbit period, add the Survival Heater ON command to the flight load package AMSU-B safe state sequence. (ABSHN)

18.5.7 MIRP PROCESSING

The AMSU-B does not use the spacecraft MIRP.

18.5.8 POWER INPUT AND PROFILE

18.5.8.1 Power Sources

The main power required by the instrument is taken from the +28 Volt Main Bus. The motors and heaters are powered using the +28 Volt Pulse Load Bus. All command and science data interfaces are powered from the +10 Volt Interface Bus. The +28 Volt Analog Telemetry Bus is used for telemetry information which is needed when the instrument is not powered and which is not critical to the mission if the bus is lost.

18.5.8.2 Power Requirements

The power requirements are described in Figure 18.5-26.

+28 Volt Main Bus		+28 Volt Pulse Load Bus (Motor)		+28 Volt Pulse Load Bus (Heater)		+10 Volt Bus		+28 Volt Analog Telemetry Bus	
Avg. (Watts)	Peak Current (Amp)	Avg. (Watts)	Peak Current (Amp)	Avg. (Watts)*	Peak Current (Amp)	Avg. (Watts)	Peak Current (Amp)	Avg. (Watts)	Peak Current (Amp)
70	2.5	13	3.0	25	0.9	0.1	0.01	0.1	0.01

* The AMSU-B heater (25 Watt Avg.) is only used during survival conditions in which the AMSU-B and AMSU-B motor are not operating. Therefore, the orbit average power will not exceed 90 Watts.

Figure 18.5-26. AMSU-B Power

18.5.9 ACTIVATION AND EVALUATION PROCEDURES AND TIMELINE

Activation of AMSU-B is per the requirements of paragraph 18.5.6.2.1 and carried out through the command mnemonics of that sequence. There is no defined waiting period before activation begins; however, the instrument will be left in the launch mode for a period of two days to allow pre-activation outgassing.

18.5.10 OPERATIONAL MODES

The operational modes of the AMSU-B instrument are Power OFF, Scan Normal, Scan Park, Scan Step and Investigation Mode. The status of each subsystem during the individual modes is described in Figure 18.5-27.

MODE	STATUS/CONDITION				
	POWER-OFF (Non-Operational)	SCAN NORMAL (Operational)	SCAN PARK (Experimental)	SCAN STEP (Experimental)	INVESTIGATION (Experimental)
FUNCTION/SUBSYSTEM					
Analog Telemetry	Partly Valid (1)	Valid	Valid	Valid	Valid
Digital Telemetry	Invalid	Valid	Valid	Valid	Valid
Digital B Telemetry	Partly Valid (2)	Valid	Valid	Valid	Valid
Antenna & Microwave Subsystem	Unpowered	Powered & Fully Functional	Powered & Fully Functional	Powered & Fully Functional	Powered & Fully Functional
Scanning Subsystem	Unpowered	Powered & Rotational	Power On	Power On	Powered & Rotational
Electrical Subsystem	Unpowered	Powered & Fully Functional	Powered & Fully Functional	Powered & Fully Functional	Powered & Fully Functional
Survival Heaters	Powered (COMMANDED BY SPACECRAFT ONLY)	Unpowered	Unpowered	Unpowered	Unpowered

(1) Receiver temperature telemetry valid only if +28V analog TLM bus present.
(2) Power status and survival heaters status valid only if +10V interface bus present.

Figure 18.5-27. Instrument Operating Modes.

18.5.10.1 Scan Normal

This is the normal scan sequence of the instrument. There are four scan normal profiles stored in memory: one for each space view. A change in the required space view by level telecommands must be strobed by sending a scan normal pulse telecommand.

18.5.10.2 Scan Park

In this mode, the scanning subsystem is parked with the instrument viewing either the selected cold (space) calibration view, the internal calibration target or nadir as required.

18.5.10.3 Scan Step

The scanning subsystem increments the field-of-view (FOV) by 1.1°.

18.5.10.4 Investigation Mode

This mode is similar to Scan Normal mode except that the location of the cold calibration view is incremented sequentially over four consecutive scan cycles.

18.5.11 CALIBRATION REQUIREMENTS

The radiometer is continually calibrated in flight with the aid of a cold reference view to space and a "warm" reference consisting of an ambient temperature calibration target. Both space and the calibration target are viewed once during each scan. Gain is then computed from FOV counts taken at each of the two views and used to determine a radiance value for each channel. Apparent scene temperatures are finally calculated from the radiance values.

18.5.12 ROUTINE COMMAND REQUIREMENTS

There are no special commands during AMSU-B orbital operations. When necessary, the normal command sequences shown in Paragraph 18.5.6.2 are employed.

18.5.13 EVALUATION OF NOMINAL PERFORMANCE AND TREND REQUIREMENTS

18.5.13.1 Pre-activation and Post-activation Monitoring

Prior to instrument activation following launch, and just after turn-on, the Digital B status (as shown in Figure 18.5-22 plus the Analog telemetry of Figure 18.5-21) are monitored to assess general instrument status and health. The nominal range of analog values for each telemetry point is unique to each flight model and those applicable to FM-1 are given in Figure 18.5-21. The limits for each of the same telemetry points are shown in Figure 18.5-28.

18.5.13.2 Functional Evaluation

The combination of Digital A telemetry, selective scan position identification, and radiometric data associated with the applicable positions is employed to evaluate functional performance of AMSU-B when the instrument is operational. In particular, the shaft positions confirmed are:

(a) Space calibration view Pixel 1

(b) Blackbody calibration view Pixel 1

(c) Earth view Pixel 1

(d) Earth view Pixel 45

	ANALOG TELEMETRY	DESCRIPTION	LIMITS RED LO	YELLOW LO	YELLOW HI	RED HI
An	TM01	+12V (A) sec	10.56	11.28	12.72	13.44
An	TM02	-12V (A) sec	-13.44	-12.72	-11.28	-10.56
An	TM03	+15V (A) sec	14.70	14.85	15.15	15.3
An	TM04	-15V (A) sec	-15.3	-15.15	-14.85	-14.7
An	TM05	+8V (A) sec	7.8	7.9	8.1	8.2
An	TM06	+5V (A) sec	4.4	4.7	5.3	5.6
An	TM07	+5V (A) sec	4.4	4.7	5.3	5.6
An	TM08	-5V (A) sec	-5.6	-5.3	-4.7	-4.4
An	TM09	+5V (A) Ref sec	4.9	4.95	5.05	5.1
An	TM10	ICE temp (°C)	-13.0	19.8	26.8	58.0
An	TM11	MDE temp (°C)	-13.0	19.6	26.6	48.0
An	TM12	PEU temp (°C)	-13.0	21.7	28.7	48.0
An	TM13	PSU temp (°C)	-3.0	27.0	34.0	60.0
An	TM14	Scan motor temp (°C)	-13.0	18.9	25.7	50.0
An	TM15	Scan motor current (A)	0.0	0.1	2.9	3.0
An	TM16	LO 16 temp (°C)	12.0	28.0	38.0	46.0
An	TM17	LO 17 temp (°C)	12.0	28.0	38.0	46.0
An	TM18	LO 18/19/20 temp (°C)	12.0	28.0	38.0	46.0

Figure 18.5-28. FM-1 Analog Telemetry Warning Limits.

The raw radiometric counts data for views (a), (b) and (d) are evaluated for each of the five radiometric channels. Other raw radiometric counts examined for all channels are those taken during Space Calibration View Pixels 2, 3 and 4. The Digital A telemetry and limits are displayed in Figure 18.5-29, and shaft position values and limits for the selected views in Figure 18.5-30.

18.5.13.3 Trending

Long term performance assessment involves trending of key parameters found in both the Digital A and Analog Telemetry plus radiometric data. Trending is performed on the following telemetry:

(a) Local oscillator temperatures
(b) Local oscillator currents
(c) Amplifier temperatures
(d) Blackbody temperature
(e) Space (cold) calibration view (pixel 1) radiometric counts - all 5 channels
(f) Blackbody (warm) calibration view (pixel 1) radiometric counts - all 5 channels
(g) Earth pixel 1 position
(h) Space pixel 1 position
(i) Blackbody pixel 1 position
(j) Scan motor current

		DESCRIPTION	LIMITS(*) RED LO	YELLOW LO	YELLOW HI	RED HI
Dig	A03	Mixer 16 temp	13.0	24.0	30.0	39.0
Dig	A04	Mixer 17 temp	13.0	25.4	31.4	39.0
Dig	A05	Mixer 18/19/20 temp	13.0	22.5	28.5	39.0
Dig	A06	FET Amp 16 temp	14.0	36.0	42.0	45.0
Dig	A07	FET Amp 17 temp	14.0	28.8	34.8	45.0
Dig	A08	FET Amp 18 temp	14.0	26.8	32.8	45.0
Dig	A09	FET Amp 19 temp	14.0	25.8	31.8	45.0
Dig	A10	FET Amp 20 temp	14.0	28.7	34.7	45.0
Dig	A11	Cal target PRT1 temp	10.0	18.2	24.2	37.0
Dig	A12	Cal target PRT2 temp	10.0	18.2	24.2	37.0
Dig	A13	Cal target PRT3 temp	10.0	18.2	24.2	37.0
Dig	A14	Cal target PRT4 temp	10.0	18.2	24.2	37.0
Dig	A15	Cal target PRT5 temp	10.0	18.2	24.2	37.0
Dig	A16	Cal target PRT6 temp	10.0	18.2	24.2	37.0
Dig	A17	Cal target PRT7 temp	10.0	18.2	24.2	37.0
Dig	A18	Sub-reflector temp	0.0	17.6	23.6	50.0
Dig	A19	LO current 16 (mA)	550	650	850	950
Dig	A20	LO current 17 (mA)	600	700	900	1000
Dig	A21	LO current 18/19/20 (mA)	850	950	1150	1250
Dig	A22	LO 16 temp	28.0	30.0	33.0	35.0
Dig	A23	LO 17 temp	32.5	34.5	37.5	39.5
Dig	A24	LO 18/19/20 temp	27.3	29.3	32.3	34.3
Dig	A25	PRT bridge voltage (V)	3.22	3.25	3.31	3.34
Dig	A26	PRT board temp	-13.0	23.1	30.1	48.0

*Digital A Telemetry Temperatures in °C.

Figure 18.5-29. Digital A Telemetry Warning Limits.

	NOMINAL	RED LO	YELLOW LO	YELLOW HI	RED HI
SPACE CAL PIXEL 1	155.5° (16277)	154.5° (16134)	155.2° (16237)	155.8° (16327)	156.5° (16420)
BLACKBODY PIXEL 1	268.5° (32348)	267.5° (32206)	268.1° (32298)	268.8° (32398)	269.5° (32491)
EARTH PIXEL 1	41.05° (0)	39.99° (51044)	40.09° (51186)	41.15° (14)	42.15° (156)
EARTH PIXEL 45	89.45° (6884)	88.35° (6728)	89.35° (6870)	89.55° (6898)	90.55° (7040)
	Counts in Parentheses				

Figure 18.5-30. Shaft Positions and Warning Limits.

18.5.14 CONSTRAINTS

18.5.14.1 Pre-Launch

18.5.14.1.1 Pressure - When the instrument is not in vacuum, operation of the scan mechanism will degrade the bearing performance. Therefore, the following constraints apply:

- Nitrogen Purge - During all tests that involve the rotation of the scanning mechanism bearing assembly with the exception of operation under vacuum conditions (< 10-5 Torr), the scanning mechanism bearings shall be subjected to a Dry Nitrogen purge. The purge shall be for a minimum period of 15 minutes at a purge rate of 10 cubic feet/hour prior to the start of the test, followed by a constant purge rate of 5 cubic feet/hour during the operation of the mechanism. A nitrogen purge port is provided on the body of the drive mechanism.

- Mechanism Rotation - Even with a Nitrogen purge during ground operation of the scanning mechanism, the lead lubricated bearings will still wear at an increased rate (with respect to on orbit and/or vacuum operation). Hence, during all stages of ground testing (not performed under vacuum conditions), operation of the scanning mechanism shall be minimized to the fullest extent possible with a goal of maintaining, but not restricted to, a limit of 133 hours.

  During all stages of ground testing, the cumulative number of revolutions incurred by the scan mechanism shall be recorded.

- Nitrogen Purity - The nitrogen gas used to purge the AMSU-B scan motor assembly must meet the following specification:

  1. 99.998% pure
  2. Oil free
  3. Water ≤ 4 ppm
  4. Oxygen ≤ 4 ppm

18.5.14.1.2 EMI - Due to the EMI sensitivity of the mixer diode, flash photography and pulsed lasers are not permitted in the vicinity of AMSU-B.

18.5.14.1.3 Handling - Controls and procedures shall be per the following documents:

AMSU-B General Handling Procedure	HIR/AMS/J2346/BAe
Instrument Safety Requirements	N/A
AMSU-B ESD Control Plan	PLN/AMS/J2949/BAe

18.5.14.1.4 Temperature - Refer to Figure 18.5-16 for individual equipment temperature limitations.

The AMSU-B instrument shall not be operated such as to cause the A05 digital sub-multiplexed telemetry monitor of the receiver 183GHz mixer temperature to be outside the following limits:

AMSU-B STATUS	MIN (°C)	MAX (°C)
Operating extremes	-27	46
Operating within specification	+13.5	+35.1
Non-operating	-27	+49

If the non-operating lower limit of -27°C is approached, then the heaters shall be enabled. If the non-operating upper limit of +49°C is approached, then the applied environment must be halted. To achieve correct operation of the Gunn Diode Oscillators, these devices shall be switched on at temperatures ≥ + 6°C. If switch-on has occurred prior to achieving +6°C, the GDO's should be switched-off, and switched back on. This will ensure that the correct mode is generated.

As a simultaneous condition on the above constraint, during all ground operations/tests the instrument shall not be operated such that reference thermocouple TC010, attached to the AMSU-B baseplate, is outside the following limits:

AMSU-B STATUS	TEMPERATURE LIMITS °C	
	MIN	MAX
Operating (within specification)	11	32.5
Operating (survival)	1	43
Non-operating	-25	47

If the non-operating lower limit is approached, then the heaters shall be enabled. If the upper limit is approached, then the applied environment must be halted.

18.5.14.1.5 Cleanliness - All spacecraft tests shall be performed in a Class 100,000 cleanroom environment except for acoustics, pyrotechnic shock, thermal vacuum preparations and during transportation. For these operations/tests, the instrument shall utilize protective covers or film.

18.5.14.1.6 Other - Survival heaters shall not be ON when the instrument is powered.

18.5.14.2 Launch

Instrument power shall be off and the antenna in stow (internal) position.

18.5.14.3 Turn-On

18.5.14.3.1 Pressure - When the instrument is not in vacuum, Section 18.5.14.1.1 shall apply. Therefore, sufficient time must be allowed for instrument evacuation prior to initial turn-on.

18.5.14.3.2 Magnetic Fields - Magnetic fields no greater than those specified in the GIIS(IS-3267415) shall be applied. The AMSU shall not be subjected to de-gaussing.

18.5.14.3.3 Temperature - The limitations of Section 18.5.14.1.4 apply.

18.5.14.3.4 Other - Survival heaters shall not be ON when the instrument is powered.

18.6 SPACE ENVIRONMENT MONITOR (SEM-2)

18.6 SPACE ENVIRONMENT MONITOR (SEM-2)

18.6.1 FUNCTIONAL DESCRIPTION

The SEM-2 Space Environment Monitor is a multichannel charged-particle spectrometer which senses the flux of charged particles at the satellite altitude, and thus contributes to knowledge of solar-terrestrial phenomena. SEM-1 units have been in orbit on TIROS since 1978. SEM-2 is a new design produced by Panametrics, Inc. of Waltham, Massachusetts to specifications written by the Space Environment Laboratory of NOAA.

Solar particle emission travel to Earth in the form of the solar wind, which consists of streams of charged particles moving at hundreds of kilometers per second. It is a source of particles for the Earth's trapped radiation belts. The solar wind includes a flux of electrons and an intense flux of high-energy (1 to over 1,000 MeV) protons and alpha particles. The result is energy input to the magnetosphere, ionosphere and high atmosphere. Some particles precipitate into the ionosphere. One result is the visible aurora around both poles.

Large, abrupt changes occur in the solar wind. These changes produce changes in the magnetosphere and the ionosphere. This can result in hazards among which are:

1. Radiation hazard to people in space and people in high altitude flight;
2. Disruption of radio navigation;
3. Absorption, even blackout, of radio waves so that radio communication is disrupted;
4. Induced voltages and currents in electric power circuits leading to circuit breaker trip, damage to equipment, and burn-out of transformers;
5. Induced currents in oil pipe lines causing corrosion and damage to electric circuits;
6. Change in density of the high atmosphere causing change in drag on satellites;
7. Change in magnetic torque on satellites; and
8. Damage by electrons and protons to satellite circuits and solar panels.

For these reasons, SEM-2 is specified to sense particles over a broad range of energies. SEM-2 consists of two detectors: the total energy detector (TED) and the medium energy proton and electron detector (MEPED) along with a data processing unit (DPU).

18.6.1.1 Total Energy Detector

The Total Energy Detector (TED) measures electron and proton fluxes in the 0.05 to 20 keV energy range. Measurements are related to j (E, alpha), the differential directional energy flux, found from the number of protons and electrons in units of number per (m^2-s-sr-keV).

Two independent measurements of the particle flux are made at zero and 30° from the local vertical. The total energy is divided into two ranges: 0.05 to 1 keV and 1 to 20 keV. The TED also measures the maximum differential energy flux density and the energy at which it occurs for each direction and type (electron and proton).

TED operation is verified by an automatic In-Flight Calibration circuit to track changes in the TED electronics.

18.6.1.2 Medium Energy Proton Electron Detector

The Medium Energy Proton Electron Detector (MEPED) provides both directional and omni-direction measurements. The directional sensors, called telescopes, make independent measurements of the particle types in the energy intervals shown. LS is the level sensor (threshold) for the bottom of the range.

PARTICLE		ENERGY (keV)
Protons	LS1	30-80
	LS2	80-250
	LS3	250-800
	LS4	800-2500
	LS5	2500-7000
	LS6	> 6900 integral
Electrons	LS1	> 30 integral
	LS2	> 100 integral
	LS3	> 300 integral

Directional measurements are made near the vertical and near 90° to the local vertical.

The omni-directional sensors measure proton energy in the following ranges: >16 MeV, >35 MeV, >70 MeV and >140 MeV. Each sensor consists of a dome of moderating material which absorbs energy from the particle (and so sets the detection level), a silicon solid state detector (SSD), a preamplifier, and a level comparator which responds to particles with enough energy to go through the moderator and make a pulse big enough to exceed the level in the comparitor.

The MEPED has an In-Flight Calibration (IFC) circuit started by the command from the ground. Using pulses of increasing size, the calibration provides data for calculating the energy of each threshold and the noise (FWHM) of each directional channel.

18.6.1.3 Data Processing Unit

The Data Processing Unit (DPU) is the interface between the sensors and the spacecraft. It converts spacecraft power to the voltages required by the SEM. It counts pulses, scales them, combines some, and formats a data stream for Digital A. It digitizes analog monitors of TED, MEPED, and DPU circuits. Independent of whether SEM-2 power is on or off, some temperatures are monitors by the spacecraft.

The DPU provides bi-level monitors, via Digital B, of SEM-2 status. The DPU receives and processes commands from the ground through the spacecraft to run SEM-2.

18.6.2 SYSTEM DESCRIPTION

18.6.2.1 Total Energy Detector

The Total Energy Detector (TED) consists of eight Electrostatic Analyzers (ESA), pulse height discriminators (PHD), an in-flight calibrator (IFC), two high voltage (HV) supplies, a sweep voltage supply and housekeeping circuits. A block diagram is shown in Figure 18.6-1.

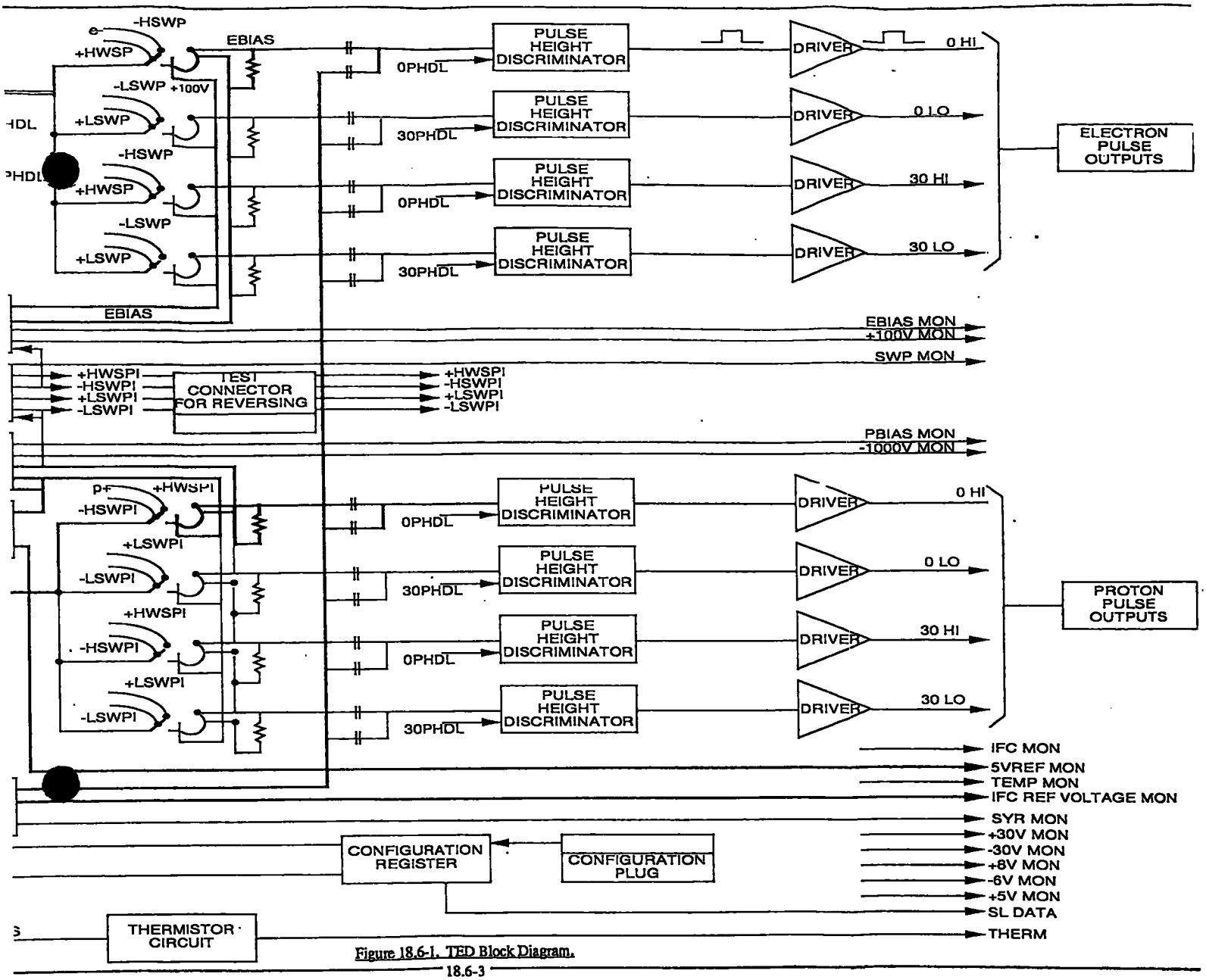

Figure 18.6-1. TED Block Diagram.

The ESA (Figures 18.6-2 and 18.6-3) selects particles by energy using curved plates which apply an electric field to the particles. Only particles of proper charge and energy pass through the analyzer. At the outlet of the ESA is a continuous dynode electron multiplier (CDEM). The CDEM makes a pulse for each particle passed by the ESA. Figure 18.6-4 is a sketch of the electron CDEM.

There is an HV supply (up to 3,700 V) for the electron CDEMs and an HV supply (up to 2,700 V) for the proton CDEMs, commanded from the ground.

The TED operates as follows:

A particle (proton, ion or electron) enters an entrance of an ESA. If the particle has the right change (+ or -) and energy, it passes through the ESA to the CDEM. For most particles the CDEM makes a pulse processed by a pulse height detector which sends a logic pulse to the DPU.

The sweep voltage steps up through a series of exponential values to allow particles of increasing energy to pass through. Timing by the DPU determines the energy counter in which the pulse is counted.

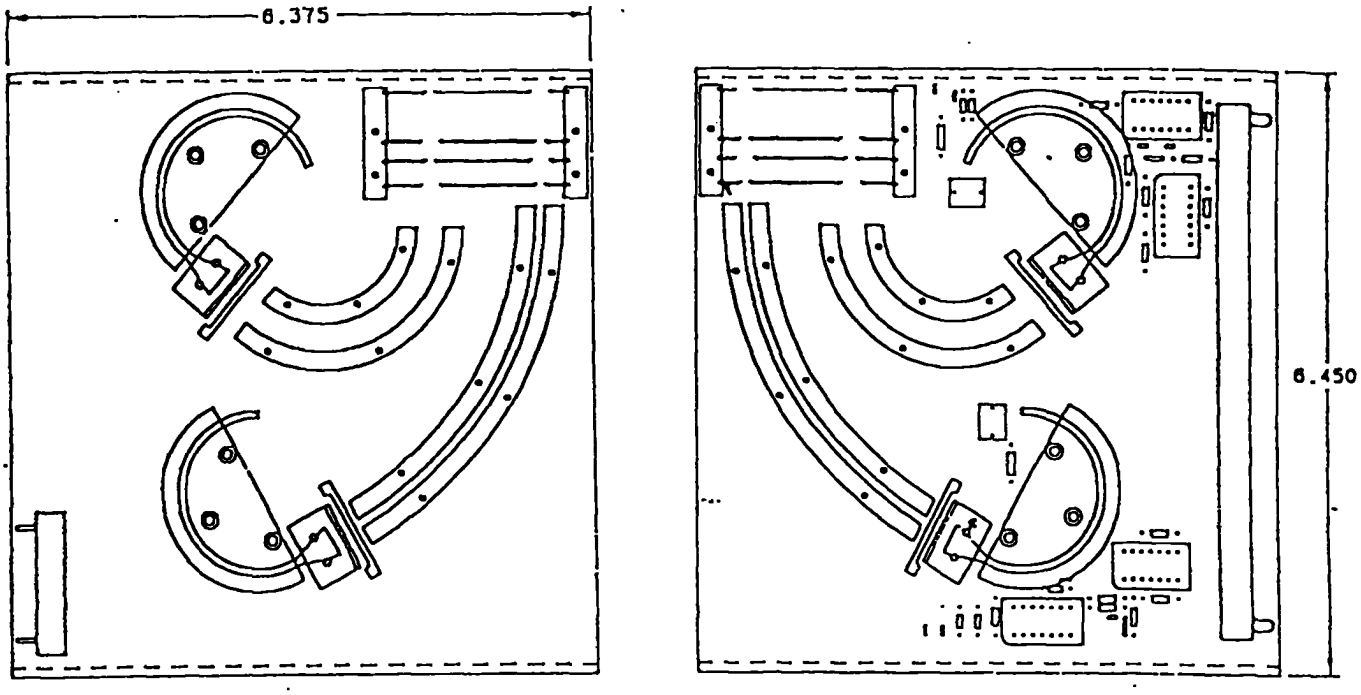

BOARD A

BOARD B

Figure 18.6-2. Electrostatic Analyzer Configuration (0°).

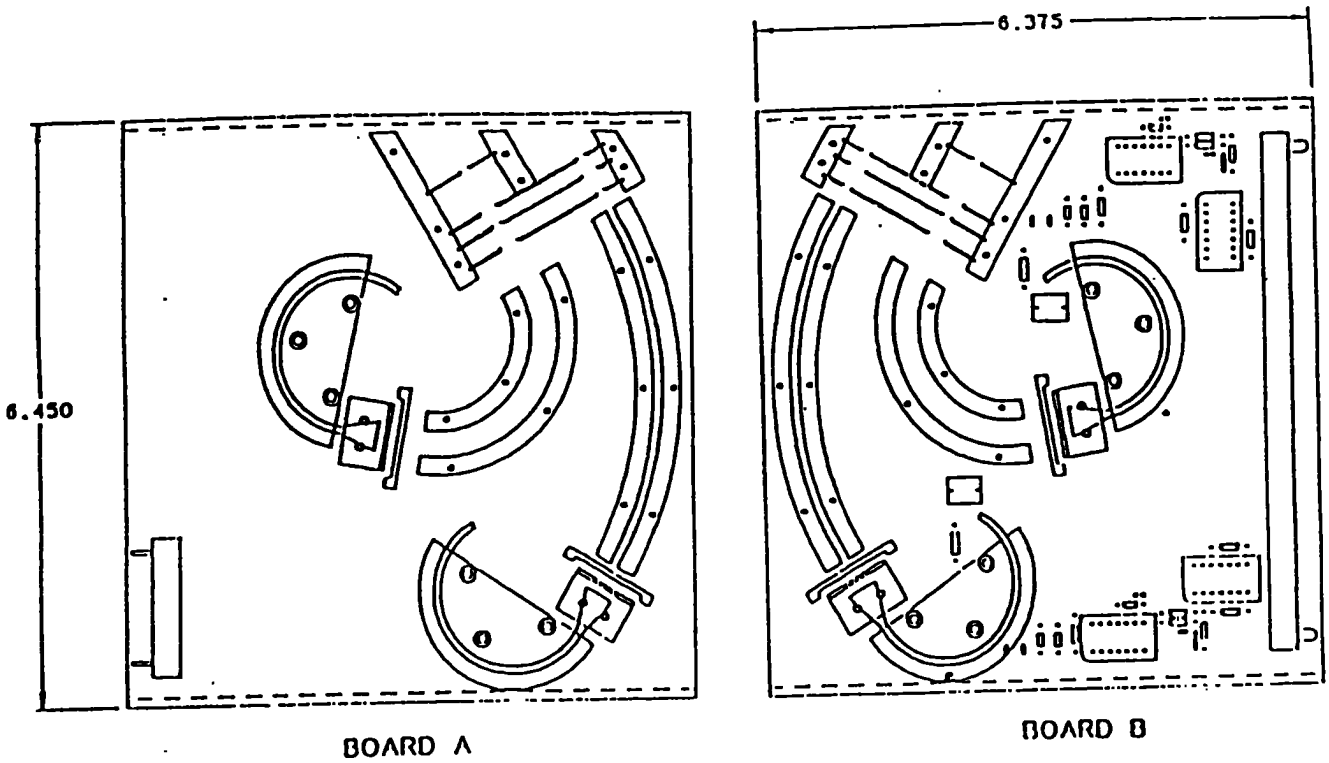

Figure 18.6-3. Electrostatic Analyzer Configuration (30°).

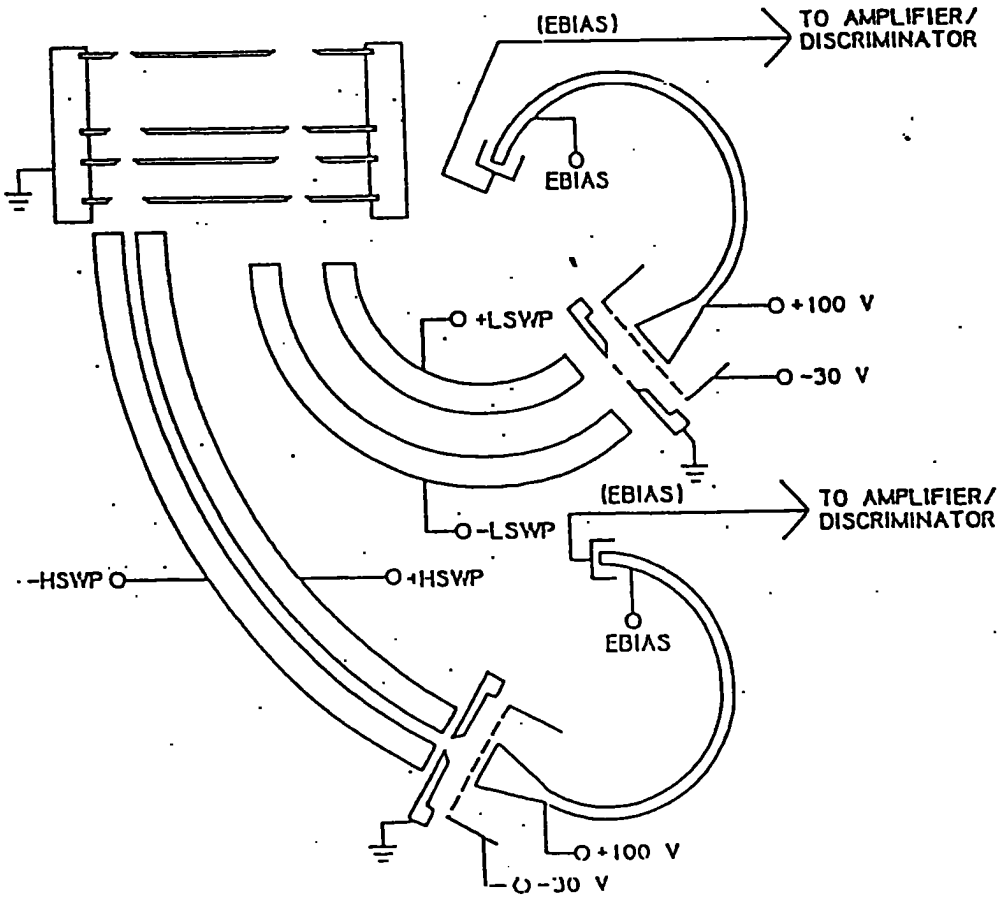

Figure 18.6-4. Continuous Dynode Electron Multipler (CDEM) Configuration.

18.6.2.2 Medium Energy Proton Electron Detector (MEPED)

The MEPED consists of two proton telescopes, (each containing two solid state detectors (SSDs)), two electron telescopes (each containing a single solid state detector) and four Omni-directional sensors (each containing a single solid state detector), Charge Sensitive Preamplifiers, Printed Circuit Boards for the Analog Signal Processor, Proton and Electron Coincidence Logic, In-Flight Calibrator, Low Voltage Regulators, SSD Bias Supply and Analog Housekeeping. A Block Diagram is shown in Figure 18.6-5.

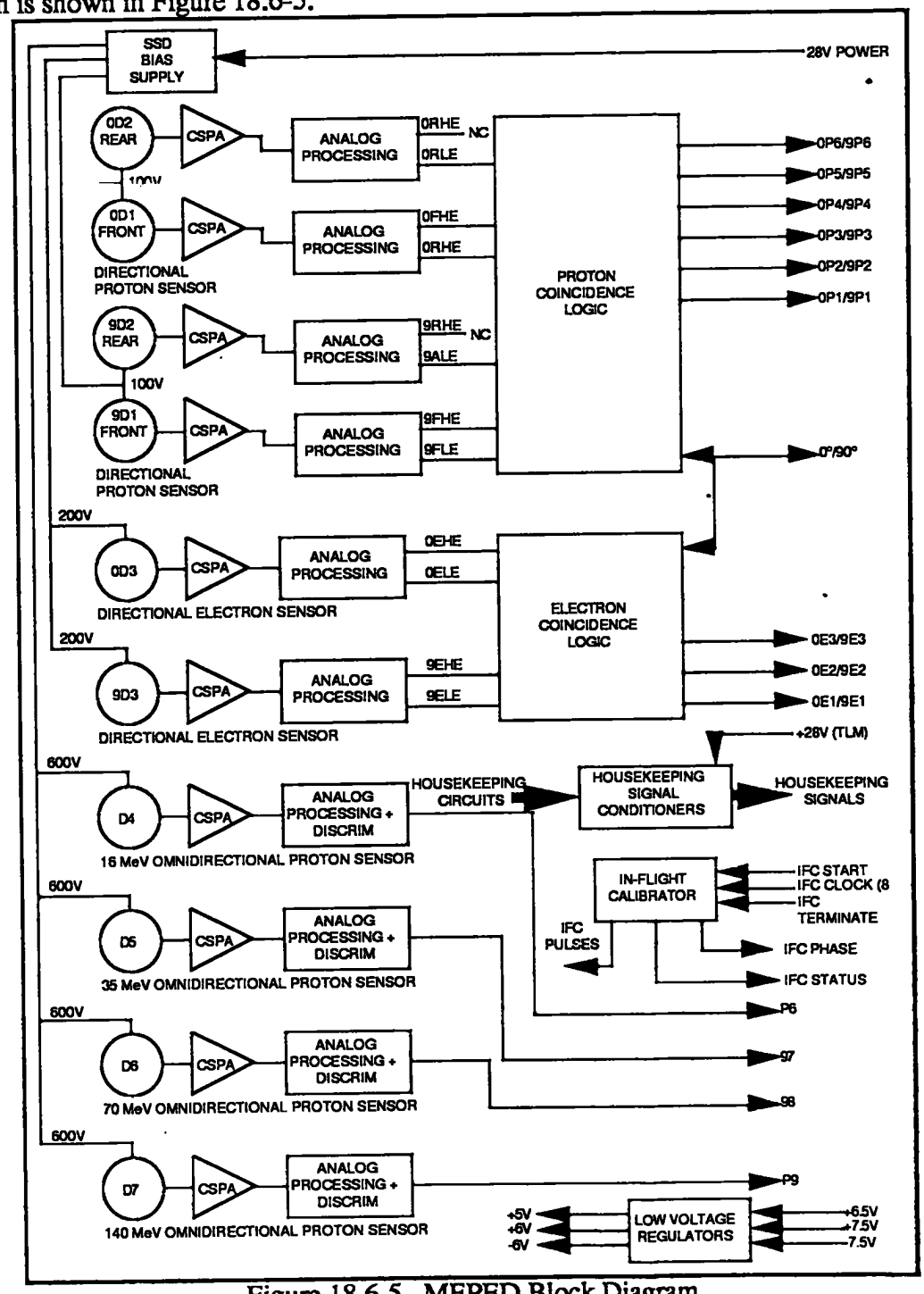

Figure 18.6-5. MEPED Block Diagram.

The two proton telescope sensors are located at 0 and 90 degrees to the local vertical. Each sensor has logic circuits which select six energy ranges from 30 keV to greater than 6900 keV. The proton telescope configuration is shown in Figure 18.6-6. The energy detection levels are divided as follows:

Level	Ep Range (keV)
LS1	30-80
LS2	80-250
LS3	250-800
LS4	800-2,500
LS5	2,500-6,900
LS6	> 6,900

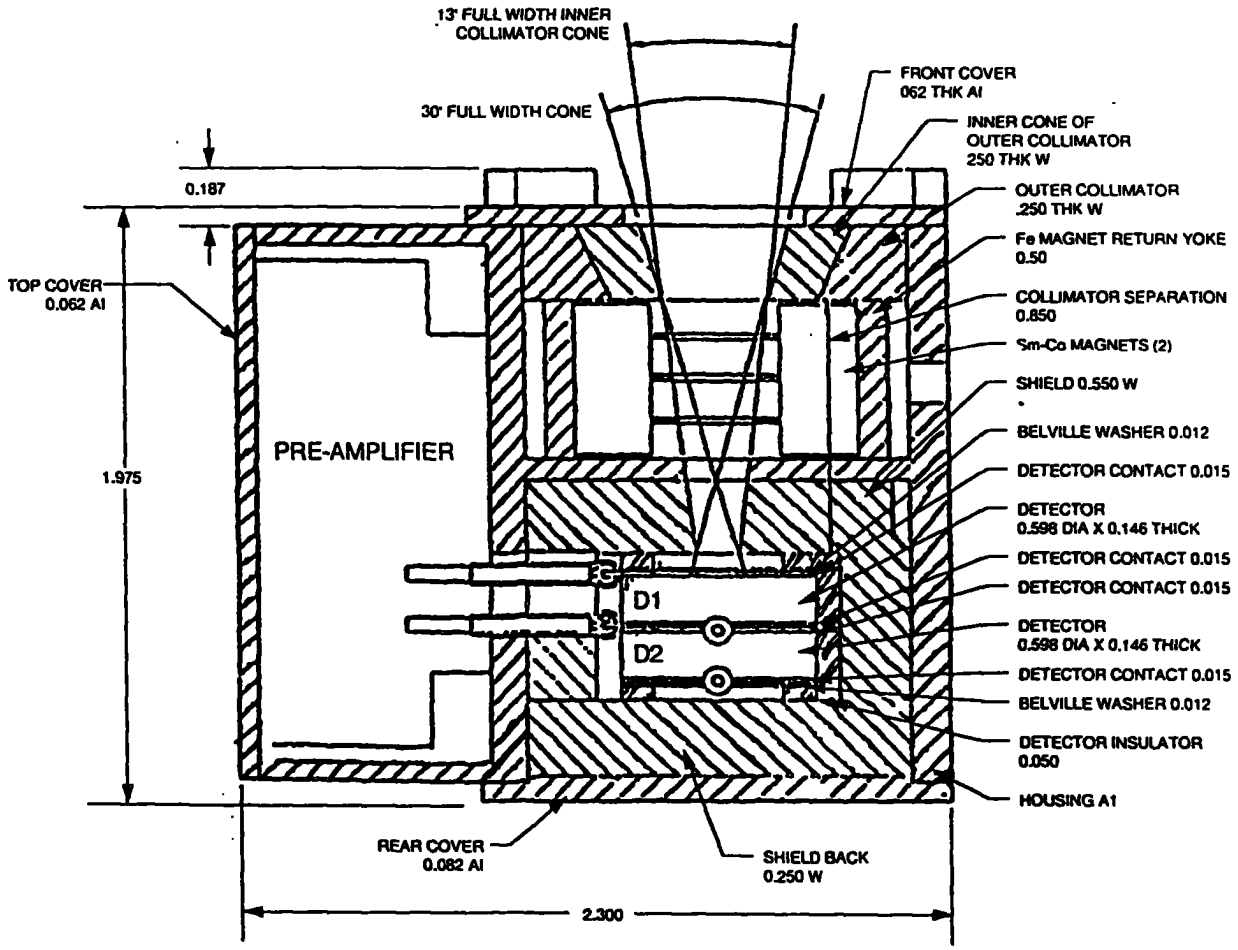

D1 and D2 are Totally Depleted Silicon Surface Barrier Detectors.
They are both 200 microns thick and have areas of 25 mm2 and 50 mm2 respectively.

Figure 18.6-6. Proton Telescope Configuration.

The two electron telescope sensors are located at 0 and 90 degrees to the local vertical. Each sensor has logic circuits which select three energy thresholds from 30 keV to 300 keV. The electron telescope configuration is shown in Figure 18.6-7. The energy threshold levels are divided as follows:

Level	Ep Range (keV)
LS1	> 30
LS2	> 100
LS3	> 300
LS4	> 2,500*

* LS4 is sensitive to stopping electrons above 2,500 keV, but has a low detection efficiency.

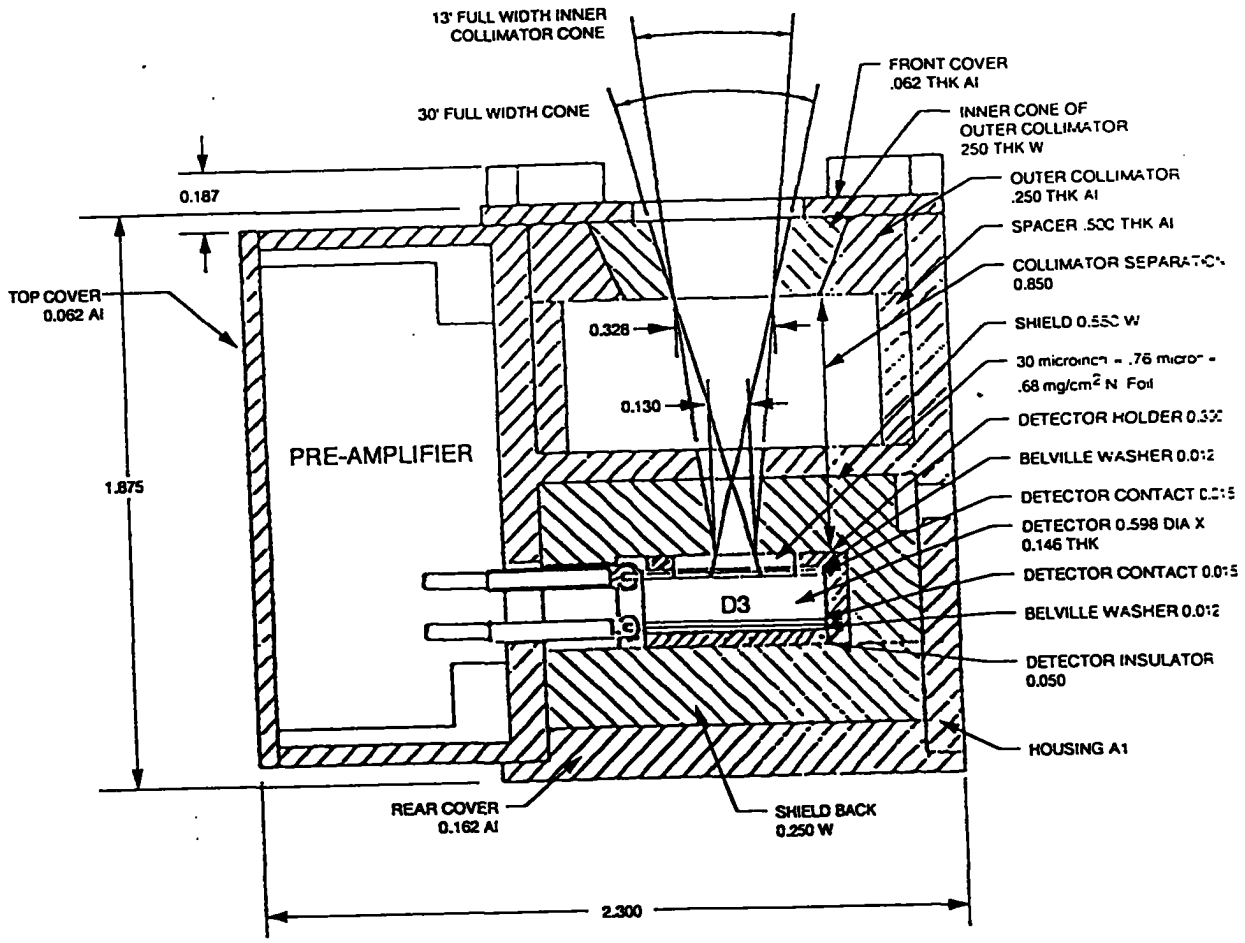

D3 is Totally Depleted Silicon Surface Barrier Detector with an area of 25 mm² and a thickness of 700 microns.

Figure 18.6-7. Electron Telescope Configuration.

The four Omni-directional Proton Sensors, D4, D5, D6 and D7 have energy thresholds at 16, 35, 70 and 140 MeV, respectively. The Omni sensor configurations are provided in Figures 18.6-8 (a), (b) and (c).

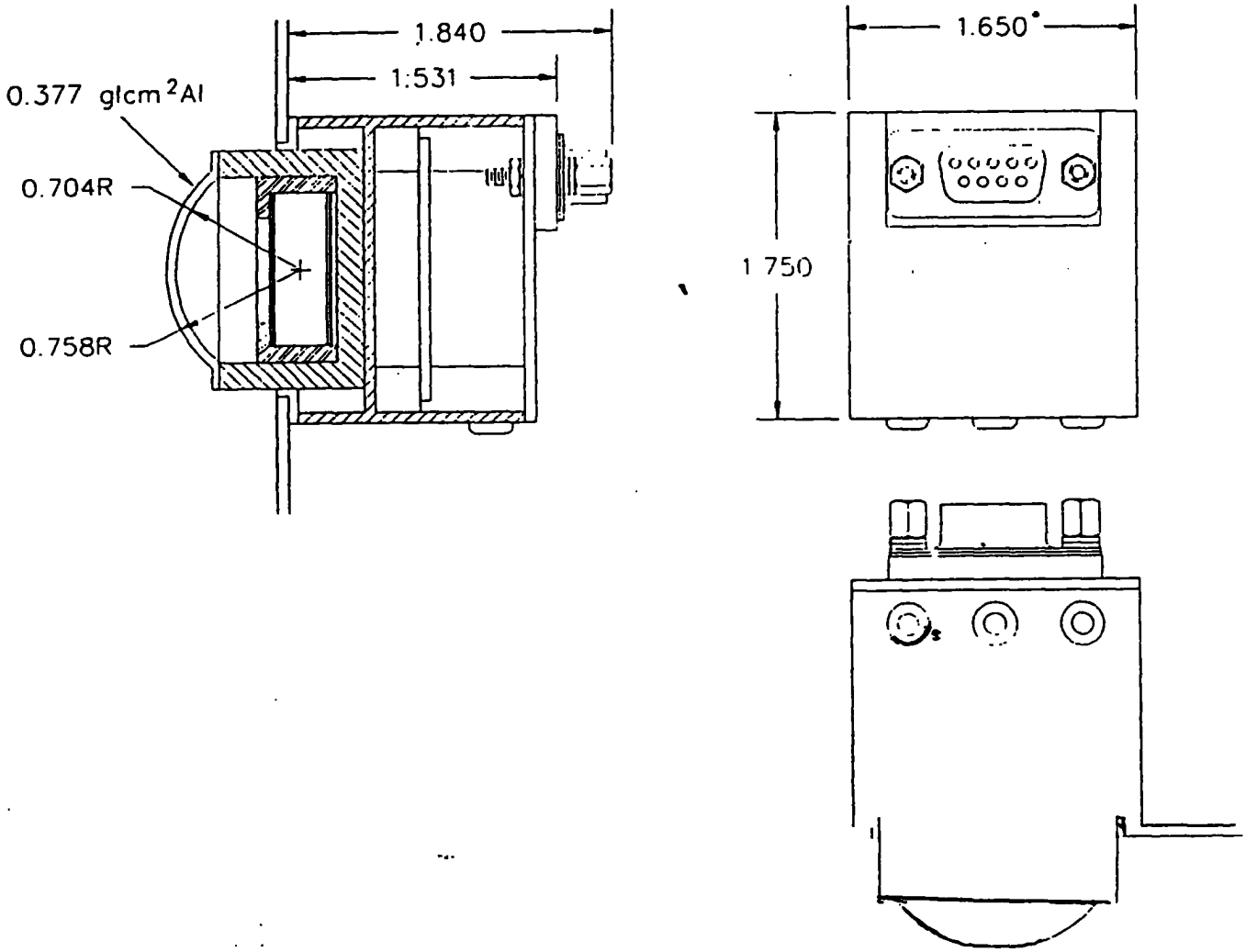

Figure 18.6-8 (a). OMNI Sensor D4 & D5 Configuration.

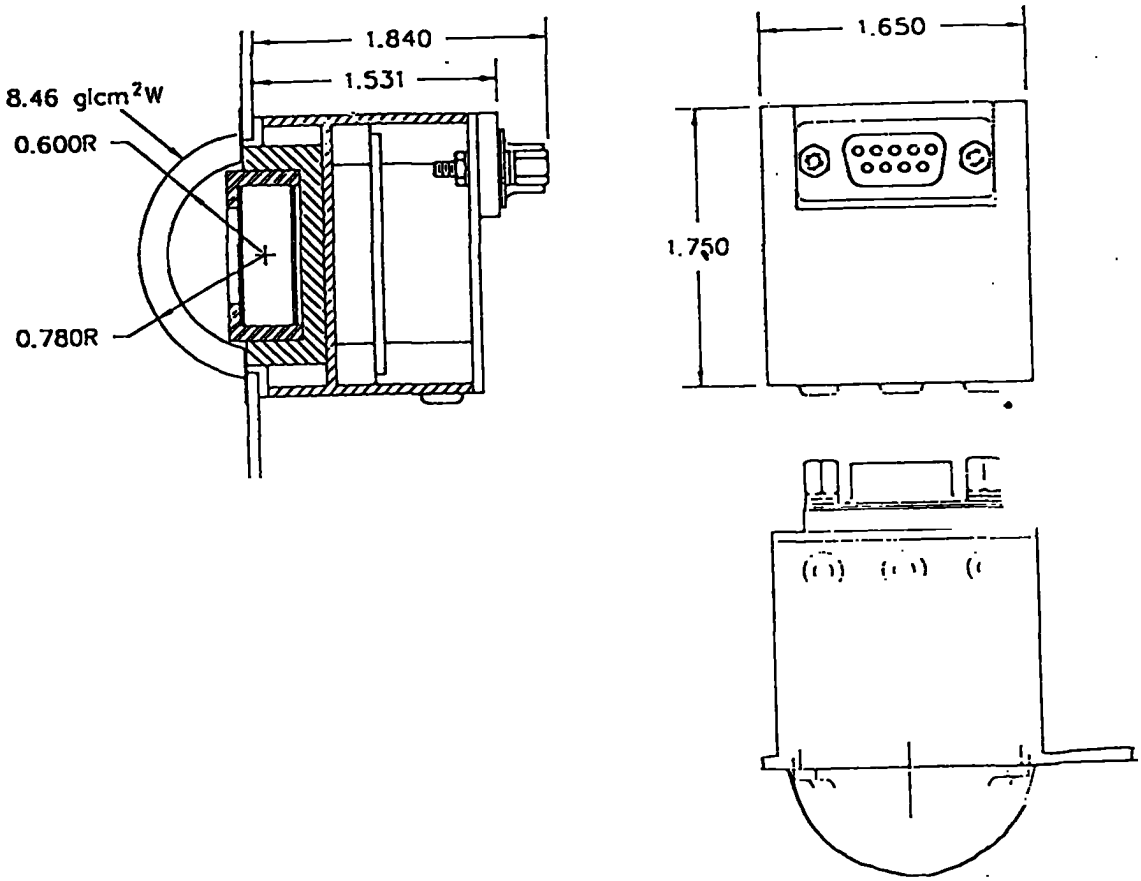

Figure 18.6-8 (b). Omni Sensor D6 Configuration.

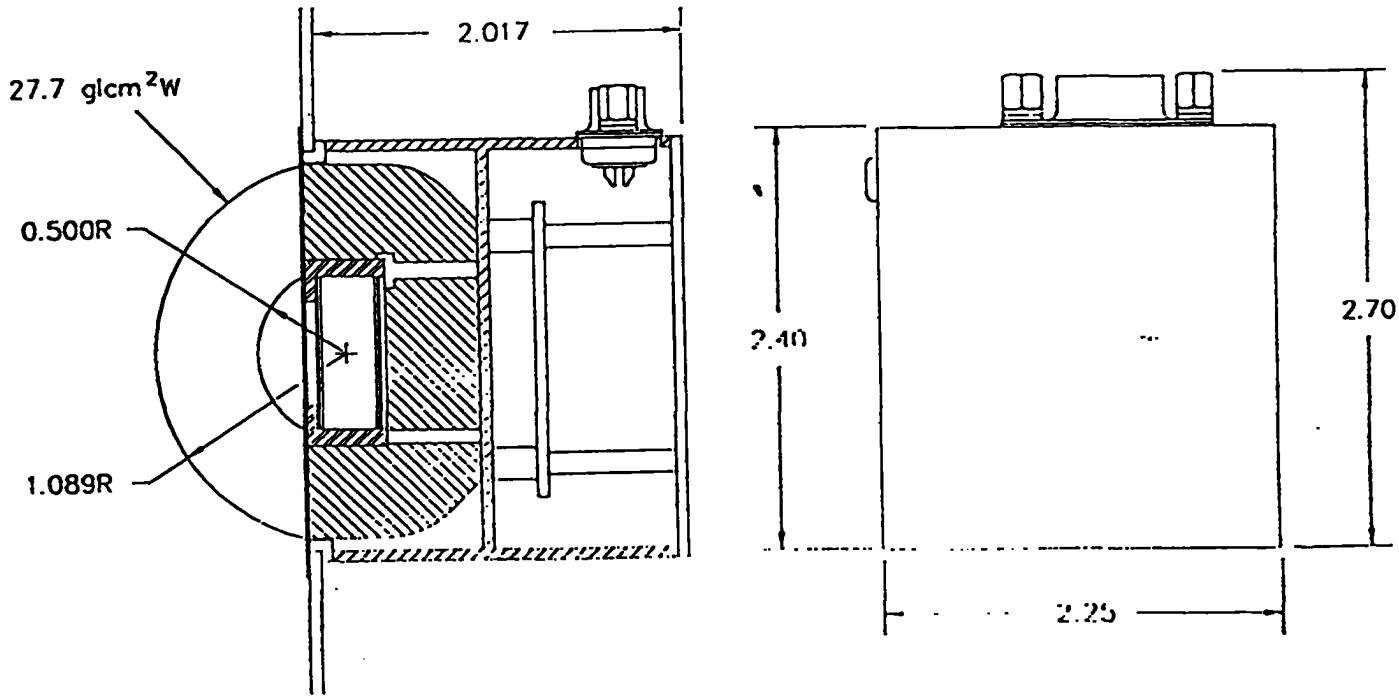

Figure 18.6-8 (c). Omni Sensor D7 Configuration.

A charged particle enters a SSD where it releases charges from the crystal until its energy is gone. The amount of charge released is generally proportional to the energy of the particle. The SSD collects the charge in a pulse and conducts it to a charge sensitive preamplifier. After passing through an analog signal processor circuit, which shapes the pulse by pole-zero cancellation, single differentiation, double integration and baseline restoration, coincidence logic separates the pulses into the various channels for counting by the DPU.

Regulated voltage for the SSDs is provided by an SSD bias supply. A block diagram of the bias supply is shown in Figure 18.6-9. An inflight calibrator (IFC) puts pulse into the circuit right at the SSD to check to complete circuit. The IFC given signals which are telemetered in the normal channels of the SEM-2 DIGA. Thresholds and noise values are calculated on the ground.

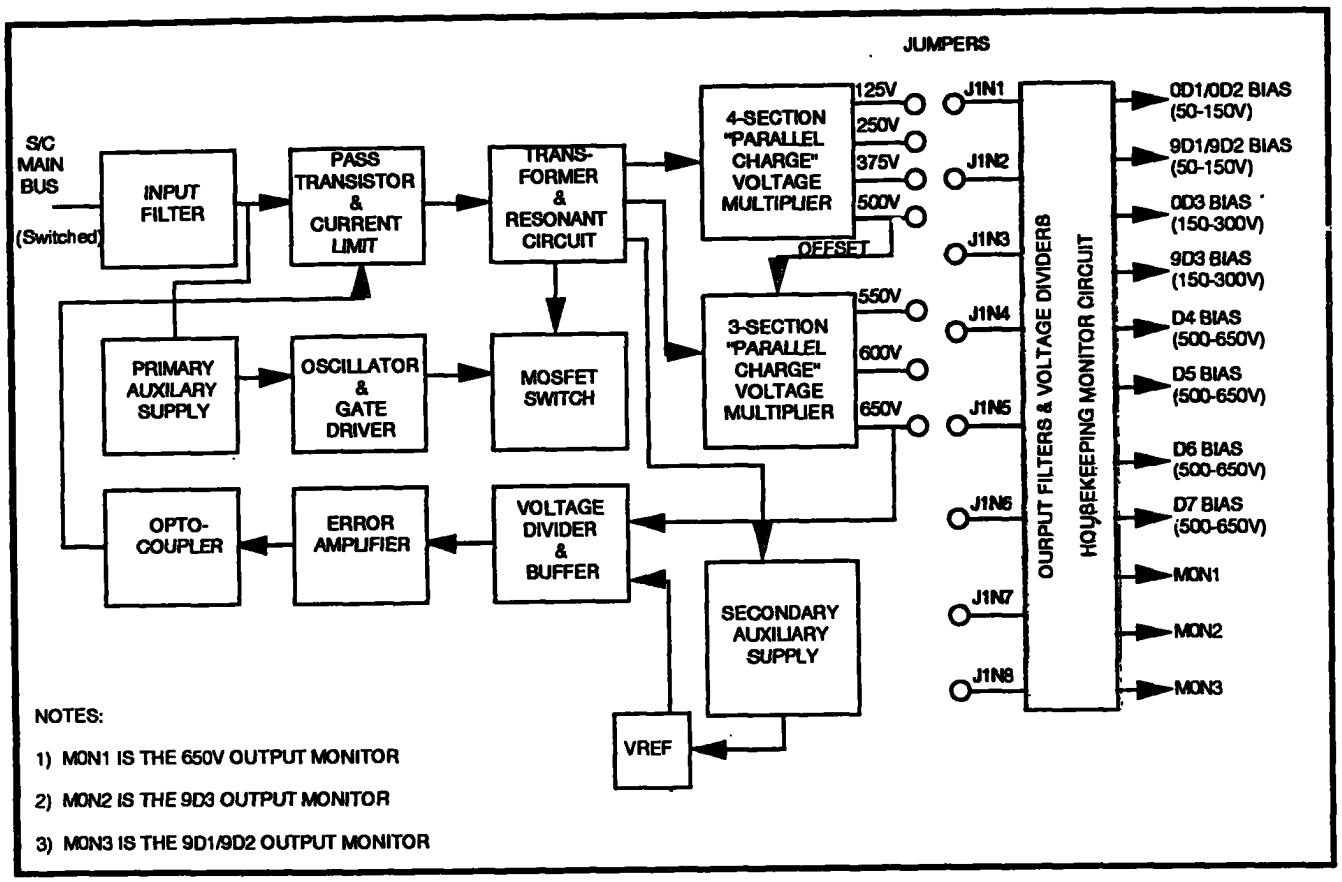

Figure 18.6-9. Bias Supply Block Diagram.

18.6.2.3 Data Processing Unit

The Data Processing Unit (DPU) is the sole electrical interface with the spacecraft except for the TED and MEPED heaters. Refer to Figure 18.6-10 for the DPU Block Diagram. It interfaces with, and controls, the TED and MEPED. The DPU performs the following tasks:

- Receives commands from the spacecraft and configures the TED and MEPED accordingly;
- Control the In-Flight Calibration of the sensors;
- Provides digital, bi-level and analog output to the spacecraft telemetry;

- Performs data accumulation from the sensors;
- Reads various SEM analog monitors

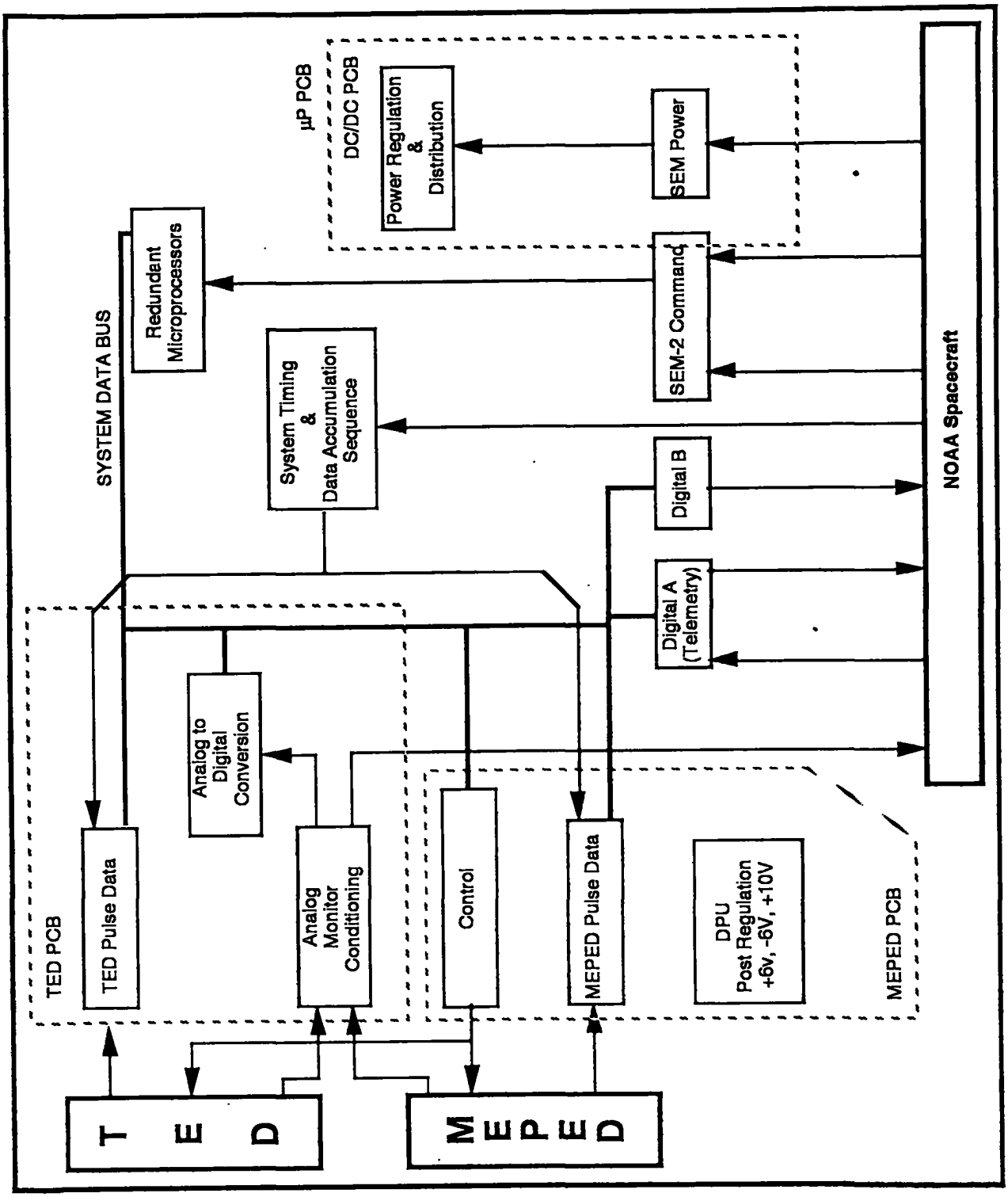

Figure 18.6-10. Data Processing Unit Block Diagram.

It is configured such that there are four "active" Printed Circuit Boards (daughter boards) and one "passive" PCB (mother board) mounted in the housing. The DC/DC converter PCB is contained in a Faraday Cage to reduce Radio Frequency Interference (RFI) caused by "high power" switching. Heat generated by the boards is guided to the chassis by the PCB ground plane. SEM operation is controlled by two redundant microprocessors, one of which is selected by ground command to be "active".

The Data Processing Unit has four functions:

1) SEM Power Conversion - DC/DC Converter. The DC/DC converter converts +28V Main Bus power to various regulated and unregulated levels for the DPU, TED and MEPED.

2) Data Processing and DPU Control - Microprocessor. The microprocessor controls most aspects of DPU operation including TED/MEPED pulse data accumulation and configuration. DPU timing functions are generated on the microprocessor board.

3) TED Data Interface - TED Printed Circuit Board. Eight channels of high speed TED pulses are input into the DPU. Analog monitors are conditioned and output.

4) MEPED Data Interface - MEPED Printed Circuit Board. Thirteen channels of high speed MEPED pulses are input to the DPU. TED HVPS and Ph.D. level control signals are output.

18.6.3 ELECTRICAL AND MECHANICAL BLOCK DIAGRAMS

Figures 18.6-1 through 18.6-10 show electrical and mechanical block diagrams of the major assemblies that make up the SEM.

18.6.4 INTERFACE TIMING

All timing, controlled by the microprocessor, is synchronous with the spacecraft 1.248 MHz clock. Various data acquisition timing signals are spawned from a single timing chain to ensure proper signal phase. A block diagram of the microprocessor and system timing is provided in Figure 18.6-11.

Data Processing Unit timing can be broken into the following categories:

- Data acquisition timing for the TED and the MEPED
- Digital A Timing
- Microprocessor and Data Bus Timing
- Watchdog Timing

18.6.5 INSTRUMENT TELEMETRY

The Data Processing Unit sends data to the spacecraft. Within the Data Processing Unit, telemetry is generated from three areas: Digital A, Digital B and Analog circuit boards.

18.6.5.1 Analog Telemetry

Thirteen analog monitors are provided, as delineated in Figure 18.6-12. Nine of these monitors verify proper command execution and indicate general state-of-health. These are also digitized and included in Digital A. The remaining four are +28 Volt Analog Telemetry Bus powered temperature monitors, which allow the MEPED, TED and the DPU housing temperatures, as well

as one MEPED proton telescope temperature, to be monitored regardless of whether the instrument is on or off. These temperature monitors are not digitized for inclusion in Digital A. Several additional temperature monitors, powered by SEM-generated voltages, are digitized and provided in Digital A. These monitors function only when the SEM is on.

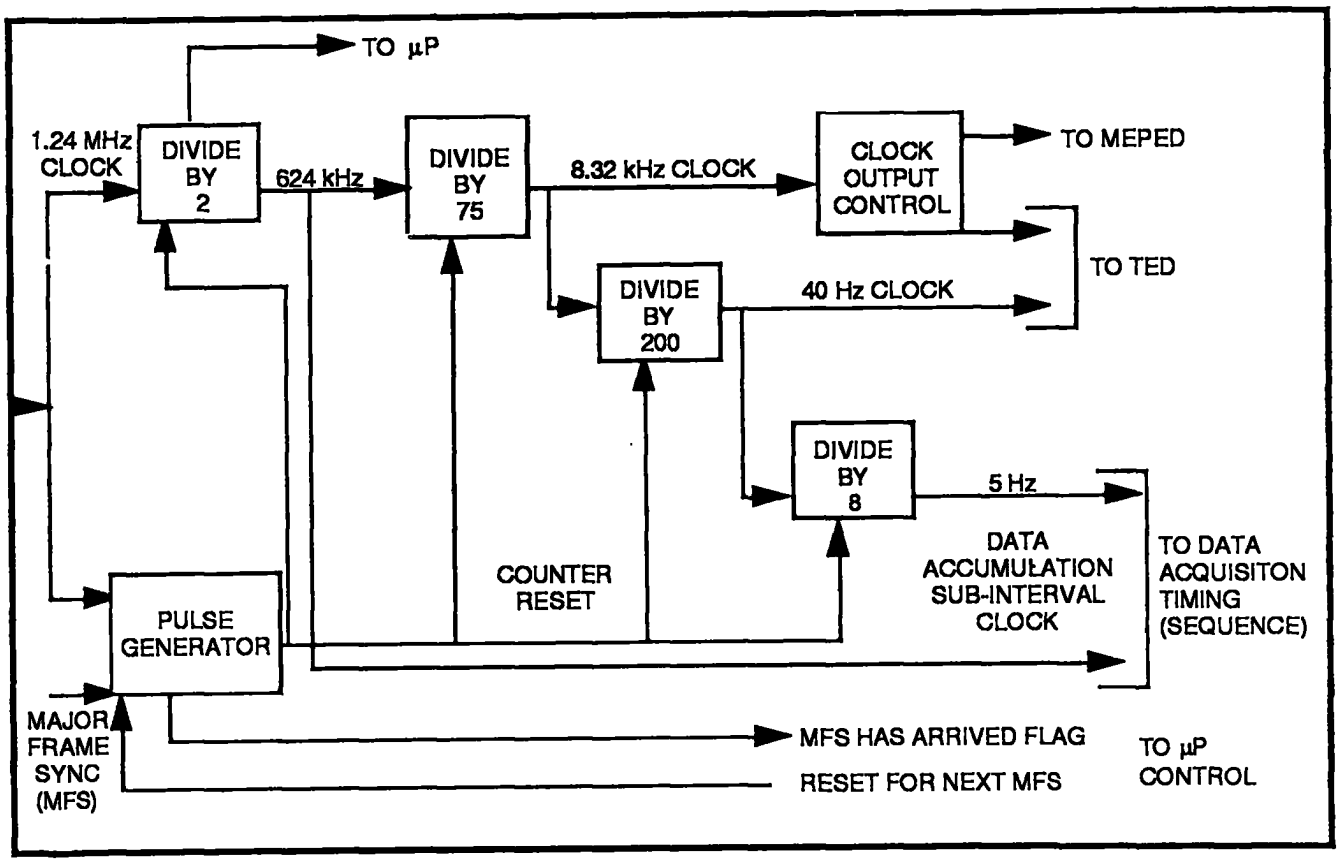

Figure 18.6-11. Microprocessor and System Timing.

No	Mnemonic	Data Assignment	Source	Sub-Com.	Minor Frame	Ch. #	Also Included In Digital A	Notes	Range
1	µP SYS A +5	µP SYS A +5 Volts Mon	DPU	16AN	4/164	294	•	Verifies µP on commands.	4.94V to 5.10V
2	µP SYS B +5	µP SYS B +5 Volts Mon	DPU	16AN	108/268	492	•	Verifies µP on commands.	4.93V to 5.09V
3	DPU +5V	DPU +5 Volts Monitor	DPU	16AN	2/162	326	•	Verifies DPU ON/OFF commands.	4.94V to 5.10V
4	MEP +5V	MEP +5 Volts Monitor	MEP	16AN	3/163	318	•	Verifies MEPED ON/OFF commands.	4.98V to 5.08V
5	TED +5V	TED +5 Volts Monitor	TED	16AN	96/256	302	•	Verifies TED ON/OFF commands.	4.83V to 5.03V
6	TED SWP V	TED Sweep Voltage Monitor	TED	16AN	97/257	310	•	Verifies TED Sweep Voltage Supply ON/OFF commands.	• IFC Pulse OFF 21.56V to 29.16V • IFC Pulse ON -0.02V to 0.25V
7	TED E CDEM HV	TED Electron CDEM HV Mon	TED	32AN	230	230	•	Verifies TED Electron CDEM HV ON/OFF and CONTROL commands.	• TED E OFF <100V • TED E ON 22.56V to 3200V
8	TED P CDEM HV	TED Proton CDEM HV Mon	TED	32AN	222	222	•	Verifies TED Proton CDEM HV ON/OFF and CONTROL commands.	• TED P OFF <100V • TED P ON 1672V to 2092V
9	MEP OMNI BV	MEP Omni Sens Bias V Mon	MEP	32AN	214	214	•	Verifies MEPED SSD Bias Supply ON/OFF commands.	644.11V to 670.40V
10	MEP CIR THERM	MEP Circuit Temp Mon (2)	MEP	32AN	143/303	143		Powered by +28 V Analog Telemetry Bus.	-20°C to35°C
11	MEP P TEL THERM	MEP P Telescope Temp Mon (2)	MEP	32AN	135/295	135		Powered by +28 V Analog Telemetry Bus.	-20°C to 28°C
12	TED THERM	TED Temperature Monitor (2)	TED	32AN	127/287	127		Powered by +28 V Analog Telemetry Bus.	-20°C to 35°C
13	DPU THERM	DPU Temperature Monitor (2)	DPU	32AN	119/279	119		Powered by +28 V Analog Telemetry Bus.	-20°C to 40°C

(1) 16AN, 32AN are 16 and 32 second sample periods, respectively.
(2) Powered by +28V Analog Telemetry bus.

Figure 18.6-12. SEM Analog Telemetry Outputs.

18.6.5.2 Digital B Status Indicators

Nine Digital B bi-level status indicators are provided, as delineated in Figure 18.6-13. Seven of these are also included in the Digital A output data.

Bit	Mnemonic	Data Assignment	Source	Minor Frame / Bit	Chan.	Also Included In Digital A	Notes
1	µP SYS ID	Active Microprocessor System ID	DPU	26/1	26	•	Verifies execution of µP configuration commands (0=µP Sys A Active, 1 = µP Sys B Active)
2	e PHD MSB	TED e Disc Control MSB	DPU	26/5	154	•	Verifies execution of TED e discriminator commands
3	e PHD LSB	TED e Disc Control LSB	DPU	26/4	122	•	Verifies execution of TED e discriminator commands MSB LSB PHD Level 0 0 0 0 1 1 1 0 2 1 1 3
4	p PHD MSB	TED p Disc Control MSB	DPU	27/3	91	•	Verifies execution of TED p discriminator commands
5	p PHD LSB	TED p Disc Control LSB	TED	27/4	123	•	Verifies execution of TED p discriminator commands MSB LSB PHD Level 0 0 0 0 1 1 1 0 2 1 1 3
6	TED IFC	TED IFC Status	TED	26/2	58	•	Verifies execution of TED IFC ON/OFF commands (0 = IFC Off, 1 = FC On)
7	MEP IFC	MEPED IFC Status	MEP	26/3	90	•	Verifies execution of MEPED IFC ON/OFF commands (0 = IFC Off, 1 = IFC On)
8	WDA STAT	µP Sys A Watchdog Status	DPU	27/1	27		Monitors µP System A watchdog (0 = not active [normal], 1 = active [fault])
9	WDB STAT	µP Sys B Watchdog Status	DPU	27/2'	59		Monitors µP System B watchdog (0 = not active [normal], 1 = active [fault])

Figure 18.6-13. SEM Digital B Telemetry.

Seven of these status indicators verify proper command execution and provide general state-of-health indication. The remaining two are microprocessor watchdog status indicators. These status bits are set to 0 at turn-on and will normally remain unchanged. Certain microprocessor malfunctions will cause the associated watchdog count to be incremented. The active microprocessor watchdog count is included in the Digital A data; however since the watchdog count is maintained by the microprocessor, it may not be incremented or readout properly for some failure conditions. To assure that a positive indication of these failures is provided, the watchdog generated microprocessor reset also sets the associated watchdog status bit. Thus, these status bits are normally 0 and toggle to 1 if an associated microprocessor watchdog reset occurs. These status bits can be reset to 0 only by issuing the appropriate microprocessor watchdog reset command, or by turning the SEM-2 power off and back on.

18.6.5.3 Digital "A" Telemetry

SEM-2 data accumulation and transfer are synchronized to the spacecraft's 32 second Major Frame. The Major Frame consists of 320 0.1 second Minor Frames, and SEM-2 is assigned two Digital A data words (20 and 21) per Minor Frame.

The Digital A telemetry format is shown in Figure 18.6-14 which identifies the data assignments for each of the two SEM data words in the 320 Minor Frames constituting one Major Frame.

MEPED Digital A data consists of six directional proton measurements and three directional electron measurements for each of two directions of incidence (0° and 90°), and four omni-directional proton measurements. All but the two highest energy omni-directional proton measurements are read out every two seconds. The two highest energy omnidirectional proton measurements are read out every four seconds. The MEPED Digital A data and readout rates are summarized in Figure 18.6-15.

TED Digital A data consists of a 0.05 to 1 keV partial energy flux measurement, a 1 to 20 keV partial energy flux measurement, maximum differential energy fluxes, four-point differential energy spectra and background measurements for electrons and protons, each at two angles of incidence (0° and 30°). The TED Digital A output data and readout rates are summarized in Figure 18.6-16. Note that the four differential energy flux maximum channel identifiers (OEM, OPM, 3EM and 3PM) are each four bits long (each identifies 1 of 16 channels) and are combined into two 8 bit words (OEM/OPM and 3EM/3PM). Note also that two (0° and 30°) proton four-point differential energy spectra are read out only three times every 32 seconds, while the two (0° and 30°) electron four-point differential energy spectra are read out four times every 32 seconds (every 8 seconds). Sensor background data and synchronization words are read out in place of the fourth proton four-point differential energy spectral data.

DASH INDICATES DATA IS THE SAME AS IN PREVIOUS COLUMN

MINOR FRAME NUMBER	0	20	40	60	80	100	120	140	160	180	200	220	240	260	280	300	
	CKSM	TED SWP V (AN SUB5)	TED E CEM HV	TED P CEM HV	MEP OMNI BV	AN SUB 1	AN SUB 2	AN SUB 3	AN SUB 4	TED IFC V	MEP IFC V	BL 1	BL 2	BL SUB	0EBKH	3EBKH	HOUSEKEEPING
DATA IN WORD 20 / DATA IN WORD 21	0P1	--	--	--	--	--	--	--	--	--	--	--	--	--	--	--	
.1 S	1	21	41	61	81	101	121	141	161	181	201	221	241	261	281	301	
	0P2	--	--	--	--	--	--	--	--	--	--	--	--	--	--	--	
	0P3	--	--	--	--	--	--	--	--	--	--	--	--	--	--	--	
	2	22	42	62	82	102	122	142	162	182	202	222	242	262	282	302	MEPED 0 DEGREE TELESCOPE
	0P4	--	--	--	--	--	--	--	--	--	--	--	--	--	--	--	
	0P5	--	--	--	--	--	--	--	--	--	--	--	--	--	--	--	
	3	23	43	63	83	103	123	143	163	183	203	223	243	263	283	303	
	0P6	--	--	--	--	--	--	--	--	--	--	--	--	--	--	--	
	0E1	--	--	--	--	--	--	--	--	--	--	--	--	--	--	--	
	4	24	44	64	84	104	124	144	164	184	204	224	244	264	284	304	
	0E2	--	--	--	--	--	--	--	--	--	--	--	--	--	--	--	
	0E3	--	--	--	--	--	--	--	--	--	--	--	--	--	--	--	
	5	25	45	65	85	105	125	145	165	185	205	225	245	265	285	305	
	9P1	--	--	--	--	--	--	--	--	--	--	--	--	--	--	--	
	9P2	--	--	--	--	--	--	--	--	--	--	--	--	--	--	--	
	6	26	46	66	86	106	126	146	166	186	206	226	246	266	286	306	
	9P3	--	--	--	--	--	--	--	--	--	--	--	--	--	--	--	
	9P4	--	--	--	--	--	--	--	--	--	--	--	--	--	--	--	
	7	27	47	67	87	107	127	147	167	187	207	227	247	267	287	307	MEPED 90 DEGREE TELESCOPE
	9P5	--	--	--	--	--	--	--	--	--	--	--	--	--	--	--	
	9P6	--	--	--	--	--	--	--	--	--	--	--	--	--	--	--	
	8	28	48	68	88	108	128	148	168	188	208	228	248	268	288	308	
	9E1	--	--	--	--	--	--	--	--	--	--	--	--	--	--	--	
	9E2	--	--	--	--	--	--	--	--	--	--	--	--	--	--	--	
	9	29	49	69	89	109	129	149	169	189	209	229	249	269	289	309	
	9E3	--	--	--	--	--	--	--	--	--	--	--	--	--	--	--	
	P6	--	--	--	--	--	--	--	--	--	--	--	--	--	--	--	
.1 S	10	30	50	70	90	110	130	150	170	190	210	230	250	270	290	310	MEPED OMNI
	P7	--	--	--	--	--	--	--	--	--	--	--	--	--	--	--	
	P8	P9	P6	P9	P6	P9	P6	P9	P6	P9	P6	P9	P6	P9	P6	P9	
	11	31	51	71	91	111	131	151	171	191	211	231	251	271	291	311	
	0DE1	3DE1	0DP1	3DP1	0DE1	3DE1	0DP1	3DP1	0DE1	3DE1	0DP1	3DP1	0DE1	3DE1	0EBKL	SYNC F3	TED DIFFERENTIAL ENERGY
	0DE2	3DE2	0DP2	3DP2	0DE2	3DE2	0DP2	3DP2	0DE2	3DE2	0DP2	3DP2	0DE2	3DE2	3EBKL	3PBKL	
	12	32	52	72	92	112	132	1523	172	192	212	232	252	272	292	312	
	0DE3	3DE3	0DP3	3DP3	0DE3	3E03	0DP3	DP3	0DE3	3DE3	0DP3	3DP3	0DE3	3DE3	0PBKL	SYNC 50	
	0DE4	3DE4	0DP4	3DP4	0DE4	3DE4	0DP4	3DP4	0DE4	3DE4	0DP4	3DP4	0DE4	3DE4	0PBKH	3PBKH	
	13	33	53	73	93	113	133	153	173	193	213	233	253	273	293	313	
	0EFL	--	--	--	--	--	--	--	--	--	--	--	--	--	--	--	TED LOW ENERGY FLUX
	3EFL	--	--	--	--	--	--	--	--	--	--	--	--	--	--	--	
	14	34	54	74	94	114	134	154	174	194	214	234	254	274	294	314	
	0PFL	--	--	--	--	--	--	--	--	--	--	--	--	--	--	--	
	3PFL	--	--	--	--	--	--	--	--	--	--	--	--	--	--	--	
	15	35	55	75	95	115	135	155	175	195	215	235	255	275	295	315	
	0EFH	--	--	--	--	--	--	--	--	--	--	--	--	--	--	--	TED HIGH ENERGY FLUX
	3EFH	--	--	--	--	--	--	--	--	--	--	--	--	--	--	--	
	16	36	56	76	96	116	136	156	176	196	216	236	256	276	296	316	
	0EFH	--	--	--	--	--	--	--	--	--	--	--	--	--	--	--	
	3PFH	--	--	--	--	--	--	--	--	--	--	--	--	--	--	--	
	17	37	57	77	97	117	137	157	177	197	217	237	257	277	297	317	
	0EM/0PM	--	--	--	--	--	--	--	--	--	--	--	--	--	--	--	
	0DEM	--	--	--	--	--	--	--	--	--	--	--	--	--	--	--	
	18	38	58	78	98	118	138	158	178	198	218	238	258	278	298	318	
	0DPM	--	--	--	--	--	--	--	--	--	--	--	--	--	--	--	TED PERK FLUX
	3EM/3PM	--	--	--	--	--	--	--	--	--	--	--	--	--	--	--	
	19	39	59	79	99	119	139	159	179	199	219	239	259	279	299	319	
	3DEM	--	--	--	--	--	--	--	--	--	--	--	--	--	--	--	
	3DPM	--	--	--	--	--	--	--	--	--	--	--	--	--	--	--	

2 S 4 S 8 S 16 S 24 S 32 S

Figure 18.6-14. SEM Digital A Telemetry Data Assignments.

Particle Type	Sensor	Detected Energy Range	Readout Time (s)	Mnemonics
Proton	Telescope 0/90 Degrees	30-80 keV	2	0P1, 9P1
		80-250 keV	2	0P2, 9P2
		250-800 keV	2	0P3, 9P3
		800-2500 keV	2	0P4, 9P4
		2500-7000 keV	2	0P5, 9P5
		>7000 keV	2	0P6, 9P6
Electron	Telescope 0/90 Degrees	≥ 30 keV	2	0E1, 9E1
		≥ 100 keV	2	0E2, 9E2
		≥ 300 keV	2	0E3, 9E3
Proton	Omnidirectional	≥ 16 MeV	2	P6
		≥ 35 MeV	2	P7
		≥ 70 MeV	4	P8
		≥ 140 MeV	4	P9

Figure 18.6-15. MEPED Digital A Data.

Definition (Note 1)	Readout Time (s)	Mnemonics	Notes
0.05-1 keV Partial Energy Flux	2	0EFL, 0PFL, 3EFL, 3PFL	
2-10 keV Partial Energy Flux	2	0EFH, 0PFH, 3EFH, 3PFH	
Maximum Differential Energy Flux	2	0DEM, 0EPM, 3DEM, 3DPM	
Energy of Maximum Diff Energy Flux	2	0EM, 0PM, 3EM, 3PM	2
Four Point Energy/Flux Spectrum	8	0DE1, 0DE2, 0DE3, 0DE4 3DE1, 3DE2, 3DE3, 3DE4 0DP1, 0DP2, 0DP3, 0DP4 3DP1, 3DP2, 3DP3, 3DP4	3, 4
Background	32	03BKH, 0EBKL, 0PBKH, 0PBKL 3EBKH, 3EBKL, 3PBKH, 3PBKL	

Notes: 1) Four sets of measurements are made:
electrons at 0 degrees,
protons at 0 degrees,
electrons at 30 degrees,
and protons at 30 degrees.
2) Four bits each, combined into two data words (0EM/0PM and 3EM/3PM).
3) Differential energy channels 4, 8, 11, and 14 (based on 1-16).
4) The four-point proton spectra are read three times every 32 seconds.

Figure 18.6-16. TED Digital A Data.

Ten Digital A data words are assigned to analog housekeeping signals, as delineated in Figure 18.6-17. Of these, five are subcommunicated, and their data assignments are delineated in Figure 18.6-18. Nine of the Digital A analog housekeeping signals, as identified in Figures 18.6-17 and 18.6-18, are also provided as direct Analog Monitor outputs. These are further discussed in section 18.6.5.1.

Minor Frame	Word	Mnemonic	Data Assignment	Source	Also Provided As Analog Monitor
20	20	TED SWP V	TED Sweep Voltage Monitor	TED See Figure 18.6-18	•
40	20	TED E CDEM HV	TED Electron CDEM High Voltage Monitor	TED	•
60	20	TED P CDEM HV	TED Proton CDEM High Voltage Monitor	TED	•
80	20	MEP MONI BV	MEP Omni Sensor Bias Voltage Monitor	MEP	•
100	20	AN SUB 1	Analog Subcommutator 1	See Figure 18.6-18	
120	20	AN SUB 2	Analog Subcommutator 2	See Figure 18.6-18	•
140	20	AN SUB 3	Analog Subcommutator 3	See Figure 18.6-18	
160	20	AN SUB 4	Analog Subcommutator 4	See Figure 18.6-18	
180	20	TED IFC V	TEC IFC Ramp Voltage Monitor	TED	
200	20	MEP IFC V	MEP IFC Ramp Voltage Monitor	MEP	

Readout time = 32 seconds

Figure 18.6-17. Analog Digital A Assignments

Minor Frame	Mnemonic	Data Assignment	Source	Also Provided As Analog Monitor
Digital A Analog Subcommutator Number 1 Data Assignments (Minor Frame 100, Word 20, Readout Time = S12 seconds)				
1, 9	µP SYS A +5V	Microprocessor System A +5 Volt Monitor	DPU	•
2, 10	µP SYS B +5V	Microprocessor System B +5 Volt Monitor	DPU	•
3, 11	DPU +5V	DPU +5 Volt Monitor	DPU	•
4, 12	DPU +10V	DPU +10 Volt Monitor	DPU	•
5, 13	DPU +6V	DPU +6 Volt Monitor	DPU	
6, 14	DPU -6V	DPU -6 Volt Monitor	DPU	
7, 15	DPU TEMP	DPU Temperature Monitor	DPU	•
8, 16	DPU REF	DPU DAC Reference Voltage Monitor	DPU	
Digital A Analog Subcommutator Number 2 Data Assignments (Minor Frame 120, Word 20, Readout Time = 512 seconds)				
1, 9	MEP +6.5V	MEP +6.5 Volt Monitor	MEP	
2, 10	MEP +7.5V	MEP +7.5 Volt Monitor	MEP	
3, 11	MPE -7.5V	MEP -7.5 Volt Monitor	MEP	
4, 12	MEP +5V	MEP +5 Volt Monitor	MEP	•
5, 13	MEP +6V	MEP +6 Volt Monitor	MEP	
6, 14	MEP -6V	MEP -6 Volt Monitor	MEP	
7, 15	MEP P TEL BV	MEP Protron Telescope Bias Voltage Monitor	MEP	
8, 16	MEP E TEL BV	MEP Electron Telescope Bias Voltage Monitor	MEP	
Digital A Subcommutator Number 3 Data Assignments (Minor Frame 140, Word 20, Readout Time = 512 seconds)				
1, 9	MEP IFC REF	MEP IFC Reference Voltage Monitor	MEP	
2, 10	MEP 0 DEG REF	MEP 0 Deg, D4, D5 Sensor Th Ref V Mon	MEP	
3, 11	MEP 90 DEG REF	MEP 90 Deg, D6, D7 Sensor Th Ref V Mon	MEP	
4, 12	MEP P TEL TEMP	MEP Proton Telescope Temp Mon	MEP	
5, 13	MEP E TEL TEMP	MEP Electron Telescope Temp Mon	MEP	
6, 14	MEP OMNI TEMP	MEP Omni Temp Monitor	MEP	
7, 15	MEP ELEC TEMP	MEP Electronics Temp Monitor	MEP	
8, 16	TED TEMP	TED Temperature Monitor	TED	
Digital A Analog Subcommutator Number 4 Data Assignment (Minor Fram 160, Word 20, Readout Time = 512 seconds)				
1, 9	TED +8V	TED +8 Volt Monitor	TED	
2, 10	TED +5V	TED +5 Volt Monitor	TED	•
3, 11	TED -6V	TED -6 Volt Monitor	TED	
4, 12	TED +30V	TED +30 Volt Monitor	TED	
5, 13	TED -30V	TED -30 Volt Monitor	TED	
6, 14	TED +100V	TED +100 Volt Monitor	TED	
7, 15	TED -1000V	TED -1000 Volt Monitor	TED	
8, 16	TED REF V	TED Reference Voltage Monitor	TED	

Figure 18.6-18. Analog Digital A Subcommutator Data Assignments.

Minor Frame	Mnemonic	Data Assignment	Source	Also Provided As Analog Monitor
Digital A Subcommutator Number 5 Data Assignments (Minor Frame 20, Word 20, Readout Time = 512 seconds)				
1, 9	TED SWP V 1	TED Sweep Voltage Monitor, Step 0 (based on 0-255)	TED	See Note
2, 10	TED SWP V 2	TED Sweep Voltage Monitor, Step 32 (based on 0-255)	TED	
3, 11	TED SWP V 3	TED Sweep Voltage Monitor, Step 64 (based on 0-255)	TED	
4, 12	TED SWP V 4	TED Sweep Voltage Monitor, Step 96 (based on 0-255)	TED	
5, 13	TED SWP V 5	TED Sweep Voltage Monitor, Step 128 (based on 0-255)	TED	
6, 14	TED SWP V 6	TED Sweep Voltage Monitor, Step 160 (based on 0-255)	TED	
7, 15	TED SWP V 7	TED Sweep Voltage Monitor, Step 192 (based on 0-255)	TED	
8, 16	TED SWP V 8	TED Sweep Voltage Monitor, Step 224 (based on 0-255)	TED	
Data points are read every 256 seconds since they are read twice per subcommutator main frame.				
Note:	The eight Digital A Ted Sweep Voltage Monitors (TED SWP V1 to TED SWP V8) are sweep correlated samples of the TED Sweep Voltage Analog Monitor Output (TED SWPV), which is a continuous monitor of the TED Sweep Voltage.			

Figure 18.6-18. Analog Digital A Subcommutator Data Assignments (Continued).

Three Digital A data words are assigned to bi-level housekeeping, as delineated in Figure 18.6-19. One of these is subcommuted, and its data assignments are shown in Figures 18.6-20 and 18.6-21. Note that two frames (15 and 16) of the bi-level subcommutator actually contain analog data. Seven of the Digital A bi-level housekeeping assignments, as identified in Figure 18.6-19, are also provided as direct Digital B outputs. These are further discussed in section 18.6.5.2.

Bit	Mnemonic	Data Assignment	Source	Also Provided As Digital B	Notes
Digital A Bi-Level Word 1 Data Assignment (Minor Frame 220, Word 20, Readout Time = 32 seconds)					
1	SUB FC1	Subcom Frame Counter 2**0	DPU		
2	SUB FC2	Subcom Frame Counter 2**1	DPU		
3	SUB FC4	Subcom Frame Counter 2**2	DPU		
4	SUB FC8	Subcom Frame Counter 2**3	DPU		
5	ERR FLAG	Error Flag	DPU		1 = Error 0 = No Error
6		Spare			
7		Spare			
8	µP SYS ID	Active µP system ID	DPU	•	0 = µP Sys A Active 1 = µP Sys B Active

Figure 18.6-19. Digital A Bi-Level Data Assignments.

Bit	Mnemonic	Data Assignment	Source	Also Provided As Digital B	Notes
Digital A Bi-Level Word 2 Data Assignments (Minor Frame 240, Word 20, Readout Time = 32 seconds)					
1	e PHD LSB	TED e Disc Control LSB	DPU	•	
2	e PHD MSB	TED e Disc Control MSB	DPU	•	
3	p PHD LSB	TED p Disc Control LSB	DPU	•	
4	p PHD MSB	TED p Disc Control MSB	DPU	•	
5	TED IFC	TED IFC Status	TED	•	0 = IFC Off 1 = IFC On •
6	MEP IFC	TED IFC Pulser Status	TED		0 = IFC Pulser Off 1 = IFC Pulser On
7	MEP IFC PH	MEPED IFC Status	MEP	•	0 = IFC Off 1 = IFC On
8	MEP IFC PH	MEPED IFC Phase	MEP		0 = IFC Phase 0 1 = IFC Phase 1

Figure 18.6-19. Digital A Bi-Level Data Assignments (Continued).

Minor Frame	Mnemonic	Data	Source	Notes
Digital A Bi-Level Subcommutator Data Assignments (Minor Frame 260, Word 20, Readout Time = 512 seconds)				
1	CDEM HV STAT	TED CDEM HVPS Status	DPU	See Figure 18.6-21 for bit assignments.
2	µP WD CNT	Active µP System Watchdog Counter	DPU	
3	LAST CMD	Last Level Command Received	DPU	
4	SYS TEST 1	System Test Status 1	DPU	See Figure 18.6-21 for bit assignments.
5	TED CFG 1	TED Plug Byte 1	DPU	
6	TED CFG 2	TED Plug Byte 2	DPU	
7	TED CFG 3	TED Plug Byte 3	DPU	
8	TED CFG 4	TED Plug Byte 4	DPU	
9	CDEM HV STAT	TED CDEM HVPS Status	DPU	See Figure 18.6-21 for bit assignments.
10	µP WD CNT	Active µP System Watchdog Counter	DPU	
11	LAST CMD	Last Level Command Received	DPU	
12	SYS TEST 2	System Test Status 2	DPU	See Figure 18.6-21 for bit assignments.
13	ROM1 CKS	Active µP System ROM 1 Checksum	DPU	
14	ROM2 CKS	Active µP System ROM2 Checksum	DPU	
15	AD LO Z CAL	A to D Converter 50% Cal, Low Z	DPU	Analog monitor.
16	AD HI Z CAL	A to D Converter 50% Cal, High Z	DPU	Analog monitor.

Figure 18.6-20. Digital A Bi-Level Subcommutator Data Assignments.

Bit	Mnemonic	Data	Source	Notes
Digital A Bi-Level Subcommutator Frames 1 and 9 Bit Assignment (Minor Frame 260, Word 20, Readout Time = 512 seconds)				
1	E HVPS CTR1	TED Electron CDEM HVPS Control 2**0	DPU	
2	E HVPS CTR2	TED Electron CDEM HVPS Control 2**1	DPU	
3	E HVPS CTR4	TED Electron CDEM HVPS Control 2**2	DPU	
4	P HVPS CTR1	TED Proton CDEM HVPS Control 2**0	DPU	
5	P HVPS CTR2	TED Proton CDEM HVPS Control 2**1	DPU	
6	P HVPS CTR4	TED Proton CDEM HVPS Control 2**2	DPU	
7		Spare		
8		Spare		
Digital A Bi-Level Subcommutator Frame 4 Bit Assignments (Minor Frame 260, Word 20, Readout Time = 512 seconds)				
1	MFS ERR	Major Frame Sync Error	DPU	1 = Error, 0 = No Error
2	DIG A ERR	Digital A Data Control Error	DPU	1 = Error, 0 = No Error
3	DATA ERR	Data Accumulation Interval Error	DPU	1 = Error, 0 = No Error
4	SER LNK ERR	TED Serial Link Parity Error	DPU	1 = Error, 0 = No Error
5	PWR UP ERR	Power Up Error	DPU	1 = Error, 0 = No Error
6	CMD ERR	Command Processing Error	DPU	1 = Error, 0 = No Error
7	RWM TST ERR	Active µP Sys Read Write Memory Test Error	DPU	1 = Error, 0 = No Error
8	WD ERR	Active µP System Watchdog Error	DPU	1 = Error, 0 = No Error
Digital A Bi-Level Subcommutator Frame 12 Bit Assignments (Minor Frame 260, Word 20, Readout Time = 512 seconds)				
1	TED CFG ERR	TED Scale Plug Decoding Error (All Factors default to 1)	DPU	1 = Error, 0 = No Error
2	SUB INT ERR	Sub Interval Time Out Error (Sub-Interval not 0.2 seconds)	DPU	1 = Error, 0 = No Error
3	CTR OVF ERR	Compression Counter Overflow (Data held at FF hex)	DPU	1 = Error, 0 = No Error
4		Spare		
5		Spare		
6		Spare		
7		Spare		
8		Spare		
Data points are read every 256 seconds since they are read twice per subcommutator main frame.				

Figure 18.6-21. Digital A Bi-Level Subcommutator Frame Bit Assignments.

18.6.6 COMMANDS

18.6.6.1 Command Format

The SEM-2 commands arrive on seven PULSE command lines (PC1-PC7) and six LEVEL command lines (LC1-LC6). A total of 41 LEVEL commands, which configure the six LEVEL command lines, have been defined. The LEVEL command lines are strobed into a latch by the LEV LATCH pulse command (PC1). This latch is subsequently read by the active microprocessor, which then decodes and executes the LEVEL command. The remaining PULSE command lines (PC2-PC7) are used for hardware decoded commands. This minimizes the command decoding hardware required within the SEM and negates the need for any "keep-alive" or "stand-by" power, as would be required with more extensive hardware command decoding.

The PULSE command assignments are summarized in Figure 18.6-22 and the LEVEL commands are summarized in Figure 18.6-23.

Line	Spacecraft Mnemonic	Name	Function	Notes
PC1	SMLCS	LEV LATCH	Level Command Latch	
PC2	SMPAS	µPA SELECT	Microprocessor System A Select	1
PC3	SMPBS	µPB SELECT	Microprocessor System B Select	1
PC4	SMMSN	MEP BIAS ON	MEPED SSD Bias Supply On	2
PC5	SMPBN	DPU/µPB ON	DPU/µP System B On	3, 5
PC6	SMPAN	DPU/µPA ON	DPU/µP System A On	4, 5
PC7	SEMPF	SEM OFF	SEM-2 Off	6

Notes:
1) Hardware interlock prevents an unpowered µP system from controlling the system bus.
2) MEPED SSD Bias Supply may be turned on with DPU power on or off.
3) Turns DPU on and powers microprocessor system B.
4) Turns DPU on and powers microprocessor system A.
5) DPU may be operated with either or both microprocessor systems powered.
6) Turns off all SEM-2 power, including the MEPED SSD Bias Supply.

Figure 18.6-22. SEM Pulse Command Assignments.

Mnemonic	Command Line Configuration 6,7						Function Enabled	Notes
	SMLL6 (LC6)	SML5 (LC5)	SML4 (LC4)	SLM3 (LC3)	SLM2 (LC2)	SLM1 (LC1)		
TED LV OFF	0	0	0	0	0	1	TED LV Off	1, 2
SWEEP OFF	0	0	0	0	1	0	TED Sweep Supply Off	1, 2
e CDEM HV OFF	0	0	0	0	1	1	TED e CDEM HVPS Off	1, 2
p CDEM HV OFF	0	0	0	1	0	0	TED p CDEM HVPS Off	1, 2
MEPED LV OFF	0	0	0	1	0	1	MEPED LV Off	2, 3
TED LV ON	0	0	1	0	0	0	TED LV On	
SWEEP ON	0	0	1	0	1	1	TED Sweep Supply On	1
e CDEM HV ON	0	0	1	0	1	0	TED e CDEM HVPS On	1
p CDEM HV ON	0	0	1	1	0	1	TED p CDEM HVPS On	1
MEPED LV ON	0	0	1	1	0	0	MEPED LV On	
e CDEM HV0	0	1	0	0	0	1	TED e CDEM HVPS Level 000	1, 2
e CDEM HV 1	0	1	0	0	0	0	TED e CDEM HVPS Level 001	1
e CDEM HV 2	0	1	0	0	1	1	TED e CDEM HVPS Level 010	1
e CDEM HV 3	0	1	0	0	1	0	TED e CDEM HVPS Level 011	1
e CDEM HV 4	0	1	0	1	0	1	TED e CDEM HVPS Level 100	1
e CDEM HV 5	0	1	0	1	0	0	TED e CDEM HVPS Level 101	1
e CDEM HV 6	0	1	0	1	1	1	TED e CDEM HVPS Level 110	1
e CDEM HV 7	0	1	0	1	1	0	TED e CDEM HVPS Level 111	1
p CDEM HV0	0	1	1	0	0	1	TED p CDEM HVPS Level 000	1, 2
p CDEM HV 1	0	1	1	0	0	0	TED p CDEM HVPS Level 001	1
p CDEM HV 2	0	1	1	0	1	1	TED p CDEM HVPS Level 010	1
p CDEM HV 3	0	1	1	0	1	0	TED p CDEM HVPS Level 011	1
p CDEM HV 4	0	1	1	1	0	1	TED p CDEM HVPS Level 100	1
p CDEM HV 5	0	1	1	1	0	0	TED p CDEM HVPS Level 101	1
p CDEM HV 6	0	1	1	1	1	1	TED p CDEM HVPS Level 110	1
p CDEM HV 7	0	1	1	1	1	0	TED p CDEM HVPS Level 111	1

Figure 18.6-23. SEM Level Command Assignments.

Mnemonic	Command Line Configuration 6,7						Function Enabled	Notes
	SMLL6 (LC6)	SML5 (LC5)	SML4 (LC4)	SLM3 (LC3)	SLM2 (LC2)	SLM1 (LC1)		
e PHD LV 0	1	0	0	0	0	1	TED e Discriminator Level 00	1
e PHD LV 1	1	0	0	0	0	0	TED e Discriminator Level 01	1, 2
e PHD LV 2	1	0	0	0	1	1	TED e Discriminator Level 10	1
e PHD LV 3	1	0	0	0	1	0	TED e Discriminator Level 11	1
p PHD LV 0	1	1	1	0	0	1	TED p Discriminator Level 00	1
p PHD LV 1	1	1	1	0	0	0	TED p Discriminator Level 01	1, 2
p PHD LV 2	1	1	1	0	1	1	TED p Discriminator Level 10	1
p PHD LV 3	1	1	1	0	1	0	TED p Discriminator Level 11	1
TED IFC ON	1	1	1	0	0	1	TEC IFC Start	4
TED IFC OFF	1	1	1	0	0	0	TED IFC Terminate	
MEP IFC ON	1	1	1	0	1	1	MEPED IFC Start	4
MEP IFC OFF	1	1	1	0	1	0	MEPED IFC Terminate	
µPB WD RESET	1	1	1	0	0	1	µPB Watchdog Count and Status Reset	5
µPA WD RESET	1	1	1	0	1	0	µPA Watchdog Count and Status Reset	5
µP WD TEST	1	1	1	0	1	1	Active µP Watchdog Test	

Notes:
1. Indicated TED commands received during TED IFC are stored and executed upon completion or termination of IFC.
2. Default condition assumed when DPU is powered up.
3. MEPED LVPS off command received during MEPED IFC is stored and executed upon completion or termination of IFC.
4. TED and MEPED IFC may be run separately or concurrently
5. µP watchdog count reset is decoded and executed in software; µP watchdog status reset is decoded and executed in hardware.
6. "0" = 10 volts; "1" = 0 volts.
7. Undefined level command codes are ignored.

Figure 18.6-23. SEM Level Command Assignments (Continued).

The various commands defined in Figures 18.6-22 and 18.6-23 are reasonably self explanatory, except perhaps for the µPA and µPB Watchdog Count and Status Resets (µPA WD RESET and µPB WD RESET). The microprocessor watchdog counters, which provide a degree of microprocessor performance verification, are maintained in Read Write Memory (RWM). The active microprocessor watchdog count is included in Digital A. Normally watchdog counts are 0. Certain microprocessor malfunctions cause the associated watchdog to reset the microprocessor, which subsequently increments the associated watchdog count. Watchdog counts are accumulated to a maximum of 255, at which time the counter is no longer incremented, thus maximizing the probability that at least one non-zero watchdog count is read by telemetry if a watchdog detectable malfunction occurs in the active microprocessor system. The active microprocessor watchdog count may be reset to 0 by issuance of the appropriate µP Watchdog Count and Status Reset command. Both watchdog counts are reset to 0 when the DPU is powered up. Since the watchdog counts are maintained by microprocessors, they might not be incremented properly, or the active microprocessor system watchdog count might not be read out properly, for some failure conditions. To assure that a positive indication of watchdog detectable failures is provided, any watchdog-generated microprocessor reset signal also sets an associated Digital B Telemetry Output status bit (µP System A/B Watchdog Status), regardless of whether or not that microprocessor system is the active system. Thus, these two status bits are normally 0 and each toggles to 1 if an associated watchdog-generated microprocessor reset occurs. These status bits can be reset to 0 only by the appropriate Watchdog Count and Status Reset command, or by turning the SEM power off and back on. This assures that a positive indication of watchdog detectable failures is provided. It should be noted that watchdog counts are reset in software, while the watchdog status bits are reset in hardware. Thus, the Watchdog Count and Status Reset level commands are decoded in hardware as well as software.

Proper operation of the active microprocessor watchdog can be verified by the Watchdog Test command (µP WD TEST) which forces a watchdog reset of the active microprocessor. The appropriate Watchdog Count and Status Reset command must be used to reset the watchdog count and status indicator following a watchdog test.

Since the Data Processing Unit must re-synchronize following a watchdog reset, Digital A data will not be valid following a watchdog reset until the beginning of the second Major Frame following the watchdog reset.

18.6.6.2 Safe State Definition

There is no separate safe state for the SEM-2.

18.6.6.3 Power Down Sequence

18.6.6.3.1 Normal Turn-Off Command Sequence - The normal power turn off command sequence is as follows:

(1) Send the p CDEM HV OFF level command followed by the LEV LATCH (PC1) pulse command. This turns off the TED proton Continuous Dynode Electron Multiplier (CDEM) High Voltage (HV).

(2) Send the e CDEM HV OFF level command followed by the LEV LATCH (PC1) pulse command. This turns off the TED electron Continuous Dynode Electron Multiplier (CDEM) High Voltage (HV).

(3) Send the SWEEP OFF level command followed by the LEV LATCH (PC1) pulse command. This turns the TED sweep supply off.

(4) Send the TED LV OFF level command followed by the LEV LATCH (PC1) pulse command. This turns the TED low voltages off.

(5) Send the MEPED LV OFF level command followed by the LEV LATCH (PC1) pulse command. This turns the MEPED low voltages off.

(6) Send the SEM OFF (PC7) pulse command. This turns the DPU low voltage DC to DC converter and the MEPED SSD bias supply off.

The MEPED SSD bias supply may be turned on, following a SEM OFF command, by issuing the MEP SSD ON command. Thus, to protect the SSD, bias may be applied to the SSDs at all times, if desired, when the SEM-2 is off.

No other commands are processed with the DPU off (other than the DPU/µP ON command). The issuance of such commands will not, however, cause any damage.

Proper execution of all SEM commands may be verified by monitoring the instrument's Analog Monitors and Digital B Status Indicators and assuring that anticipated response occurs. Refer to section 18.6.5.1 and 18.6.5.2 for information concerning Analog Monitor and Digital B telemetry.

18.6.6.3.2 Emergency Turn-Off Command Sequence - In an emergency, the SEM OFF (PC7) pulse command may be used to turn off all SEM power. However, this command does not directly (via hardware) affect the state of the MEPED low voltage, TED low voltage, TED sweep supply, TED electron CDEM HVPS and TED proton CDEM HVPS power control relays, all of which are placed in the off state by the DPU power-up initialization software. Therefore, any of

these supplies which are on when the SEM OFF (PC7) pulse command is executed will turn on for a short period of time (<<< 1 second) when the DPU is next turned on - via the DPU/µPA or DPU/µPB pulse command. THIS DOES NOT HARM THE SEM.

18.6.6.4 Recommended Turn-On Command Sequence

The recommended power turn-on sequence is as follows (Note: A 15-day outgassing period is required prior to powering the High Voltage units):

(1) Send the appropriate microprocessor SELECT command - µPA SELECT (PC2) or µPB SELECT (PC3).

Note: Because selection is done by a mechanical memory relay, this command need not be sent if the microprocessor to be selected is the same as that last used.

(2) Send the appropriate DPU/µP ON pulse command - DPU/µPA ON (PC6) or DPU/µPB ON (PC5). This turns the Data Processing Unit and appropriate microprocessor on.

(3) Delay for approximately one (1) second then set all LEVEL COMMAND LINES to 0 (NOP) and send the LEV LATCH pulse commands.

(4) Send the MEPED LV ON level command followed by the LEV LATCH (PC1) pulse command. This turns the MEPED low voltages on.

(5) Send the MEPED BIAS ON (PC4) pulse command. This turns the MEPED Solid State Detector (SSD) bias supply on.

(6) Send the TED LV ON level command followed by the LEV LATCH (PC1) pulse command. This turn the TED low voltages on, with all discriminators at their lowest levels.

(7) Send the SWEEP ON level command followed by the LEV LATCH (PC1) pulse command. This turns the TED sweep supply on.

(8) Send the e CDEM HV ON level command followed by the LEV LATCH (PC1) pulse command. This turns the TED electron Continuous Dynode Electron Multiplier (CDEM) High Voltages (HV) on, at their minimum voltages.

(9) Send the p CDEM HV ON level command followed by the LEV LATCH (PC1) pulse command. This turns the TED proton Continuous Dynode Electron Multiplier (CDEM) High Voltages (HV) on, at their minimum output voltages.

The above sequence turns on and configures the SEM-2 in the default configuration, which is:

(a) The selected microprocessor powered.

(b) TED discriminators (PHD) at level 00.

(c) TED High Voltage is at level 000.

18.6.7 MIRP PROCESSING

MIRP processing is not applicable to the SEM-2.

18.6.8 POWER INPUT AND PROFILE

The NOAA-K SEM-2 consumes 7.65 W during normal on-orbit operations. In addition, the SEM requires a maximum of 6 W of heater power. When the SEM is off, only the heater power is required.

18.6.9 ACTIVATION AND EVALUATION (A&E) PROCEDURES AND TIMELINE

For activation, the SEM-2 is powered up as shown in Section 18.6.6.4 with required delays noted.

The selected DPU must be turned on first and separately, (step 2 above). A delay of approximately one second must occur prior to turning on and configuring the remainder of the SEM (steps 3 through 9 above). The sequence of steps 4 through 9 may be interchanged, if desired.

To minimize radiation damage to the unselected µP system, that system will normally not be powered. However, if desired, the DPU may be run with both µP systems powered.

If the default TED discriminator and HV levels are not the desired levels, appropriate commands to establish the desired levels must be sent following the normal turn-on command sequence.

Proper execution of all SEM commands may be verified by monitoring the instrument's Analog Monitors and Digital B Status Indicators to assure that anticipated responses occur. Refer to sections 18.6.5.1 and 18.6.5.2 for information concerning Digital B and Analog Monitor telemetry.

18.6.10 OPERATIONAL MODES

Except for IFC, there are no discrete operational modes. The instruments are either on or off.

18.6.11 CALIBRATION REQUIREMENTS

18.6.11.1 Introduction

The SEM-2 provides an In-Flight Calibration (IFC) for the MEPED and the TED. Each IFC is initiated by the first Major Frame Sync pulse (32 seconds maximum) following receipt of the MEPED IFC ON or TED IFC ON commands depicted in Figure 18.6-23. The IFCs may be run separately or concurrently. The initiation of the IFC is indicated in both Digital A and Digital B telemetry status indicators. The Digital A Bi-level Status indication, IFC ON, occurs in Minor Frame 240 in the first Major Frame subsequent to the start of the IFC.

18.6.11.2 Timing

The MEPED IFC is comprised of two phases, Phase 0 and Phase 1, each lasting 192 seconds, 6 Major Frames. Phase 0 tests noise FWHM and low energy threshold levels for the telescopes. Phase 1 tests high energy thresholds. The TED IFC is comprised of two phases. Phase 0 is comprised of four segments each segment lasting eight seconds. Phase 1 endures for 192 Major Frames, 101.33 minutes.

18.6.11.3 Format

The Digital A data output format during IFC is the same as the normal data format provided in Figure 18.6-14.

During Phases 0 and 1, the MEPED generates a 192 step voltage, resetting to 0 at the end of each phase. The IFC pulses are generated in two seconds off, two seconds on, sets to allow continuous measurement of the solid state detector background material counts during the off state. Figure 18.6-24 shows the MEPED IFC Ramp Sequence. Figure 18.6-25 shows the MEPED IFC Scales.

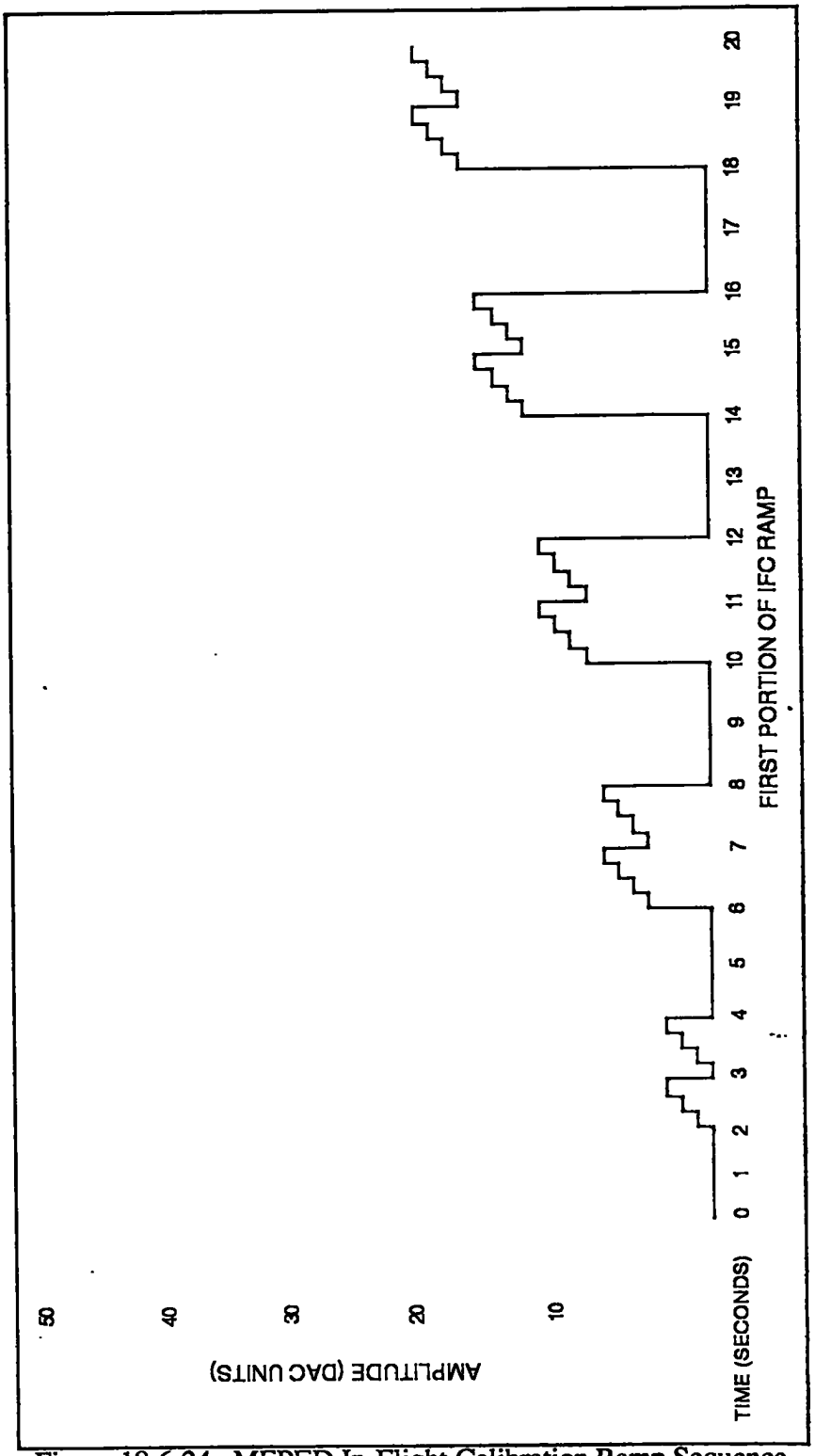

Figure 18.6-24. MEPED In-Flight Calibration Ramp Sequence.

Signal	k	kof
OE1	125.760	-0.326
OE2	125.760	-0.326
OE3	2,836.515	-36.529
OE4	2,836.515	-36.529
OP1	125.255	-0.354
OP2	125.255	-0.354
OP3	2,769.669	-39.059
OP4	2,769.669	-39.059
OP5	2,769.669	-39.059
OP6	56.138	0.700
9E1	118.094	0.006
9E2	118.094	0.006
9E3	2,697.027	-35.099
9E4	2,697.027	-35.099
9P1	125.998	-0.382
9P2	125.998	-0.382
9P3	2,796.840	-38.519
9P4	2,796.840	-38.519
9P5	2,796.840	-38.519
9P6	53.253	2.347
P6	2,568.105	-19.126
P7	2,644.661	-21.418
P8	2,578.838	-19.623
P9	2,930.804	-19.997

NOTE: k is the scale in keV at step 191, the end point of the IFC staircase.
kof is the offset in keV.

Figure 18.6-25. SEM-2 MEPED IFC Scales

The TED generates a 256 step IFC ramp pulses in eight second segments in Phase 0. The TED Pulse Height Discriminators cycle through four levels or thresholds, eight seconds at each level in Phase 0, two seconds at each level in Phase 1. The TED sweep supply is inhibited in Phase 0 and enabled in Phase 1. Figure 18.6-26 shows the TED IFC Ramp Sequence.

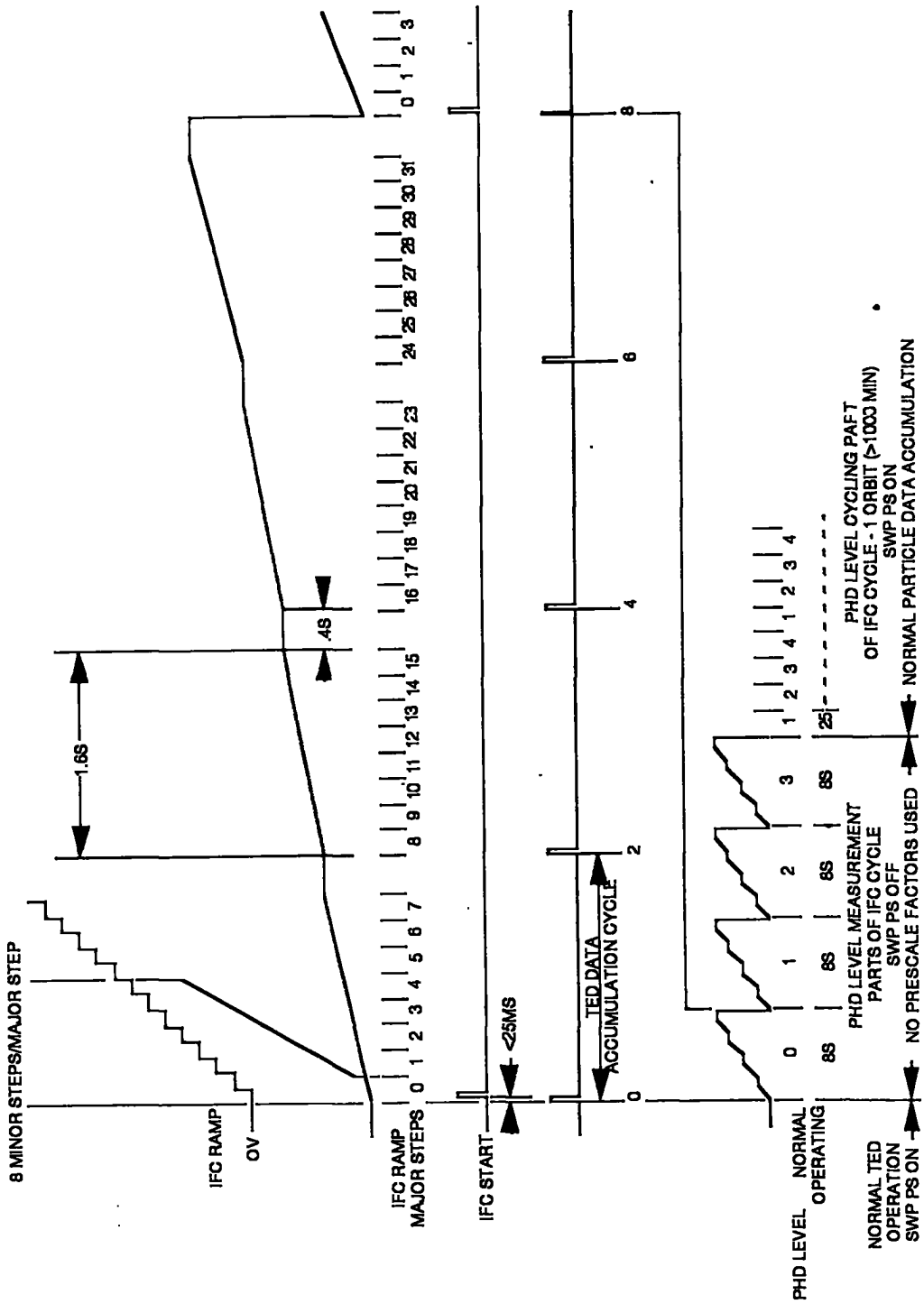

Figure 18.6-26. TED In-Flight Calibrator Ramp Sequence.

18.6.12 ROUTINE COMMAND REQUIREMENTS

There are no special commands during SEM operation. The instruments are either on or off. Command sequences for switching between on and off modes are found in Section 18.6.6.

18.6.13 EVALUATION OF NOMINAL PERFORMANCE AND TREND REQUIREMENTS

The Analog and Digital A telemetry are to be monitored to determine if the data are within acceptable ranges. The acceptable ranges for the Digital A data are shown in Figure 18.6-27. The ranges for the Analog telemetry are shown in Figure 18.6-28.

SMTU No.	MUX	Belue List	Signal	Scale	Design Value	Limits Red	Yellow	Yellow	Red	Delta
71	00	26	TED SW V	2.017	63	255	200	0	0	3
80	01	27	TED E CDEM HV	20.04	133	160	163	123	113	5
81	02	28	TED P CDEM HV	10.04	176	222	212	174	164	5
82	03	03	MEP OMNI BV	4.019	162	188	175	149	136	5
83	06	31	µPA+5V	0.0272	202	209	204	200	195	2
84	0A	32	µPB+5B	0.0272	202	209	204	200	195	2
85	0E	33	DPU+5V	0.0276	202	209	204	200	195	2
86	12	34	DPU+10V	0.0571	194	201	196	192	187	2
87	16	35	DPU+6V	0.0329	202	209	204	200	195	2
88	1A	36	DPU-6V	0.0329	202	209	204	200	195	2
89	1E	37	DPU TEMP	poly 6.0		2096	210	60	54	5
90	22	38	DPUREF	0.0268	205	212	207	203	198	2
91	07	17	MEP+6.5V	0.0332	201	221	203	199	181	2
92	0B	15	MEP+7.8V	0.03746	212	222	214	210	190	2
93	0F	16	MEP-7.8V	0.0376	212	222	214	210	190	2
94	13	14	MEP+5V	0.02499	202	224	204	200	184	2
95	17	12	MEP+6V	0.02999	209	220	211	207	202	2
96	1B	13	MEP-6V	0.03009	209	229	211	207	189	2
97	1F	02	MEP P TEL BV	0.9952	99	149	110	89	50	3
98	23	01	MEP E TEL BV	2.014	114	140	124	104	88	4
99	08	05	MEPIFC REF	0.02003	210	232	212	208	188	2
100	0C	06	MEP 0 DEG REF	0.02003	210	232	212	208	188	2
101	10	07	MEP 90 DEG REF	0.0201	210	232	212	208	188	2
102	14	08	MEP P TEL TEMP	poly 6.2	-	206	180	53	31	5
103	18	09	MEP E TEL TEMP	poly 6.2	-	206	180	53	31	5
104	1C	10	MEP OMNI TEMP	poly 6.2	-	206	180	53	31	5
105	20	11	MEP CKT TEMP	poly 6.2	-	206	180	53	31	5
106	24	18	TED TEMP	poly 6.0	-	214	212	50	31	5
107	09	19	TED+8V	0.04016	202	222	204	200	182	2
108	0D	20	TED+5V	0.04008	126	133	128	124	119	2
109	11	21	TED-6V	0.04006	151	171	153	149	131	2
110	15	22	TED+30V	0.2017	151	181	166	131	100	5
111	19	23	TED-30V	0.2003	151	181	166	131	100	5
112	1D	24	TED+100V	0.8029	126	151	139	109	83	5
113	21	25	TED-1000V	4.963	202	263	243	182	162	5
114	25	29	TED IFC REF	0.02516	201	210	210	206	192	2
115	04	30	TED IFC V	0.01312	168	230	210	0	0	2
116	05	04	MEP IFC V	0.02003	157	165	159	0	0	2
134	27	40	AD LOZ CAL	0.02003	160	167	162	158	153	2
135	26	39	AD HIZ CAL	0.02003	160	200	162	158	120	5

SMTM number is in LMAS 3267400 sheets 24-27
Belue list is in PAN BS-HSK-123092

Figure 18.6-27. SEM-2 Digital A MUX Signal Values and Limits.

SMTU No.	MUX	Belue List	Signal	Scale	Test Value	Limits				
						Red	Yellow	Yellow	Red	Delta
		41	µPA+5V	0.025316	200	207	202	198	193	2
		42	µPB+5V	0.002533	200	207	202	198	193	2
		43	DPU+5V	0.025632	200	207	202	198	193	2
		44	MEP+5V	0.02503	200	207	202	198	193	2
		45	TED+5V	0.04086	123	136	126	120	110	2
		46	TED SWPV	2.0144	219	240	230	0	0	3
		47	TED E CEM HV	20.0084	165-136	200	171	130	110	5
		48	TED P CEM HV	10.003	205-168	240	217	162	130	5
		49	MEP ONMI BV	4.014	164	187	174	147	125	5
		50	MEP CK THERM	poly 28						
			operating			61	85	212	232	5
			not operating			44	52	222	252	5
		51	MEP P TEL THERM	poly 28						
			operating			72	114	196	209	5
			not operating			44	52	222	232	5
		52	TED THERM	poly 28						
			operating			52	62	222	234	5
			not operating.			31	44	222	234	5
		53	DPU THERM	poly 28						
			operating			62	72	196	210	5
			not operating			31	37	222	232	5
The Spacecraft ADC scale is assumed to be 0/.02000 V per step on the range 0-255.										

Figure 18.6-28. SEM-2 Spacecraft Analog Telemetry.

18.6.14 CONSTRAINTS

18.6.14.1 Storage Requirements

(1) The instrument must be stored in a Class 100,000 clean room environment in an appropriate container. The temperature limits of the storage area must be +18 to +29 °C with a relative humidity maintained between 30 to 55%.

(2) The SEM-2 storage container requires a continuous dry air purge of less than 3 ppm moisture and hydro-carbons at a rate of two scfh.

18.6.14.2 Operating Environment

18.6.14.2.1 Pressure - The SEM may be operated at normal atmospheric pressure and under hard vacuum ($\leq 5 \times 10^{-5}$ Torr, 6.6 Pa) without incurring damage. **The SEM must not be operated at intermediate pressures.** The HV circuits are not to be turned on until after 15 days in hard vacuum and without NASA/GSFC permission.

18.6.14.2.2 Temperature - Temperature Limits - The temperature limits are shown in Figure 18.6-29. The instrument will be commanded to the OFF state in the event a red-limit condition occurs.

Data	TIR-ENG-101 Mnemonic	Limits (Deg C) (Input Data)				Limits (Volts) (Calculated from Deg C Inputs)			
		Low Red	Low Yellow	High Yellow	High Red	Low Red	Low Yellow	High Yellow	High Red
Dig A Analog Housekeeping Temperatures									
DPU	DPU TEMP	-25.0	-20.0	40.0	50.0	0.797	1.025	4.742	5.130
TED	TED TEMP	-25.0	-20.0	35.0	40.0	0.797	1.025	4.525	4.742
MEPED Proton Telescope	MEP P TEL TEMP	-25.0	-20.0	28.0	30.0	0.811	1.038	3.982	4.076
MEPED Electron Telescope	MEP E TEL TEMP	-25.0	-20.0	28.0	30.0	0.811	1.038	3.982	4.076
MEPED Omni	MEP OMNI TEMP	-25.0	-20.0	28.0	30.0	0.811	1.038	3.982	4.076
MEPED Electronics	MEP ELEC TEMP	-25.0	-20.0	35.0	40.0	0.811	1.038	4.290	4.478
Analog Monitor Temperatures									
MEPED Electronics	MEP ELEC THERM*	-25.0	-20.0	35.0	40.0	4.447	4.200	1.053	0.890
MEPED Proton Telescope	MEP P TEL THERM*	-25.0	-20.0	28.0	30.0	4.447	4.200	1.324	1.241
TED	TED THERM*	-25.0	-20.0	35.0	40.0	4.447	4.200	1.053	0.890
DPU	DPU THERM*	-25.0	-20.0	40.0	50.0	4.447	4.200	0.890	0.624

*These monitors are valid with SEM-2 power off (provided that the +28V ATM Bus is on).
MEP P TEL THERM shall be used as the MEPED temperature reference during thermal vacuum testing.

Figure 18.6-29. SEM-2 Temperature Monitor Limits - Using Panametrics' Polynomial Expansion Coefficients

18.7 DATA COLLECTION SYSTEM/2 (DCS/2)

18.7 DATA COLLECTION SYSTEM/2 (DCS/2)

18.7.1 FUNCTIONAL DESCRIPTION

The Data Collection System/2 (DCS/2) is one of the environmental monitoring systems to be flown on the TIROS spacecraft. The DCS/2 will assist NOAA in its overall environmental mission and in support of the Global Atmospheric Research Program (GARP). It is planned to have 2000 environmental platforms located around the Earth to measure such environmental factors as temperature, pressure, and currents. Some of these platforms will be immersed in a moving fluid, such as the ocean and the atmosphere. These moving platforms, buoys and balloons, will provide additional environmental information on velocity and direction of the ocean and wind currents.

The DCS/2 will receive information from these fixed and moving environmental platforms and will process and transfer the data for storage by the spacecraft tape recorders. These stored data will be transmitted to a TIROS-K ground station during station contact. The ground station will record and transmit the DCS/2 data to the French Centre National D'Etudes Spatiales (CNES) and to service ARGOS in Landover, Maryland. CNES is the responsible manufacturing, system engineering, and data distribution agency for the DCS/2.

18.7.2 SYSTEM DESCRIPTION

The DCS/2 is comprised of three units: the Receiving and Power Unit (RPU) and two Signal Processor Units (SPU-A and SPU-B). The DCS/2 block diagram is shown in Figure 18.7-1. The platforms transmit data to the DCS/2 at a carrier frequency of 401.650 MHz, digital biphase format at 400 bps. The DCS/2 demodulates this signal and determines the carrier frequency and relative time of each transmission. This data is processed, formatted, and transferred to the TIROS Information Processor (TIP). The following paragraphs describe how the processing occurs in each of the DCS/2 units.

18.7.2.1 Receiver Power Unit

The characteristics of the input signal to the receiver are shown in Figure 18.7-2. The receiver linearly converts the incoming signal by means of two translations to an intermediate frequency which is applied to the input of the search unit and to the Data Recovery Units (DRUs). The receiver functional block diagram is shown in Figure 18.7-3. The search unit is basically a spectrum analyzer which uses a Fast Fourier Transform to cover the 80 kHz operating frequency range.

18.7.2.2 Control Unit

The control unit sequentially scans the eight search unit channels. It makes a binary estimate of both the signal level and frequency. These two digital words are stored in the CU and are used for the assignment of a DRU to a particular receiver output signal.

18.7.2.3 Data Recovery Unit

The DRU is comprised of three sections: (1) phase-lock loop, (2) bit synchronizer, and (3) Doppler counter and formatter. The eight DRUs perform the following signal functions: acquisition of the carrier, signal demodulation, bit synchronization, frame synchronization, Doppler counting, decommutation, and formatting of the data. Figure 18.7-4 shows the DCS/2 data output format.

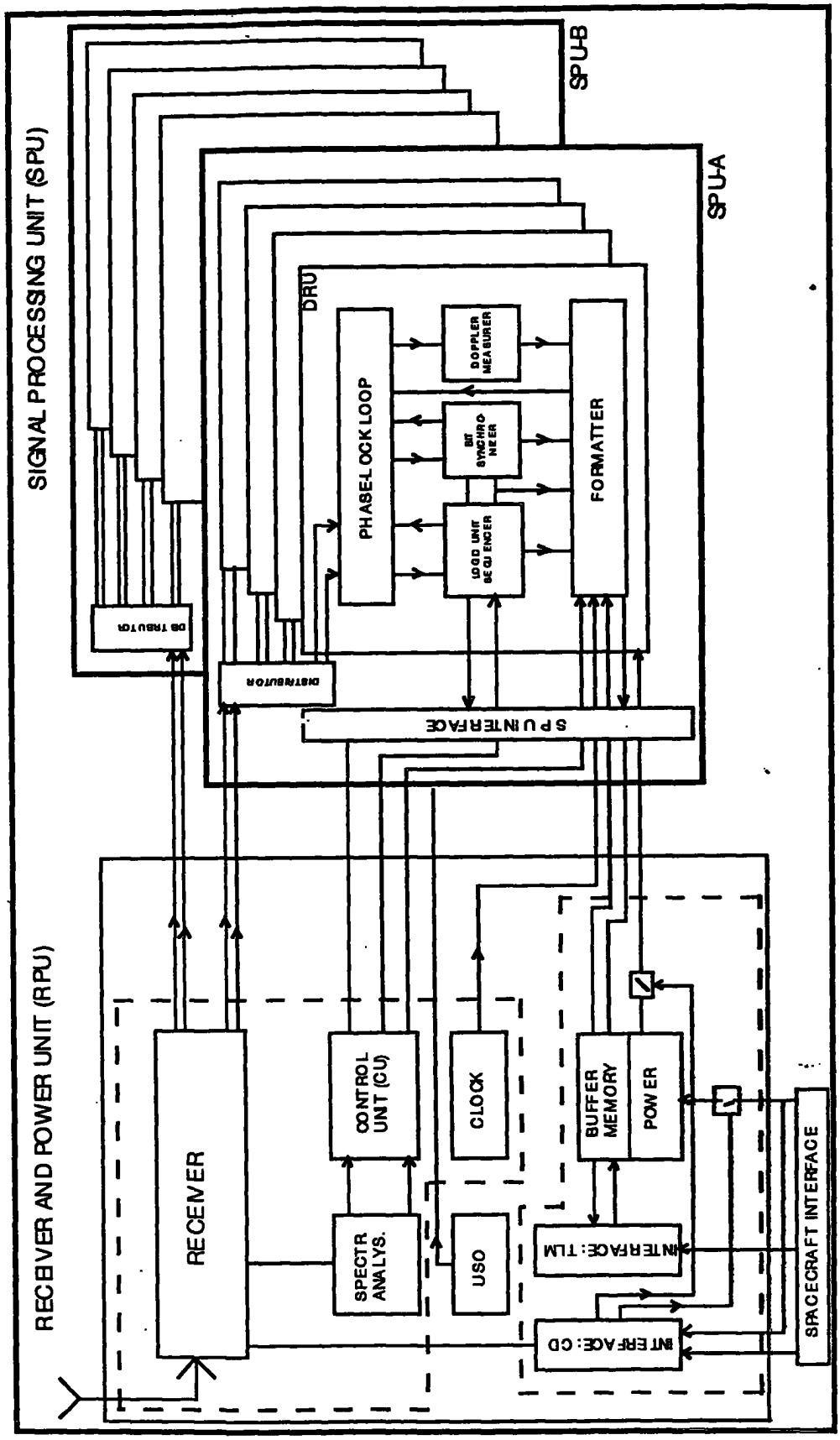

Figure 18.7-1. DCS-2 Block Diagram.

Frequency				401.650 MHz	
	• doppler			<80 Hz/s	
Level				-108 to -131 dBM	
	• minimum signal to noise ratio			43 dB-Hz	
Modulation - BøL	• bit frequency			400 ± 5 Hz	
	• stability			<10E-3	
	• modulation index			1.1 ± 0.1 rd	
Message construction					
160 ms	111111111111111	00010111	1	24 bits	n x 32 bits
C.W	B.S	F.S		IDENT.	n = 1,2...8 Sensor Data

Figure 18.7-2. Input Signal Characteristics.

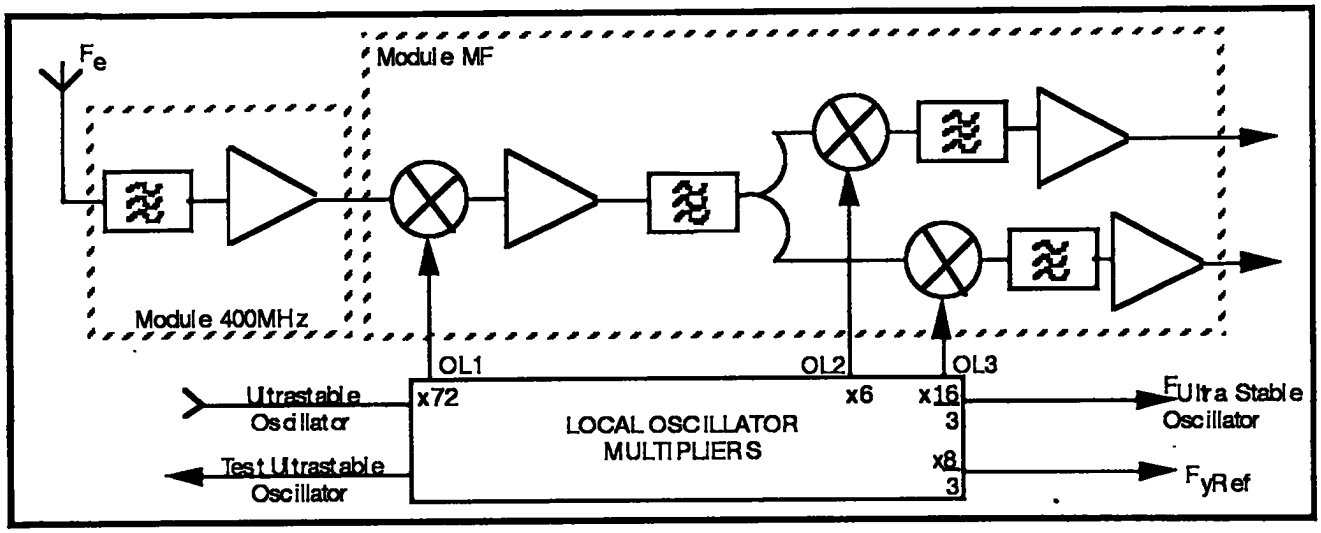

Figure 18.7-3. Receiver Functional Block Diagram.

18.7.2.4 Telemetry Encoder and Memory

The telemetry formatter interrogates the buffer in the DRUs. When the buffer is full, the encoder sends a command to shift the 24 bits into memory. When the data transfer signal from the TIP is received by the encoder, it will transfer the data out of memory to the TIP.

18.7.2.5 Power and Command Unit

Power for the DCS/2 is supplied by the spacecraft +28 V main power bus. This voltage is converted by the power unit to four levels; +5.0, +12, -12, and -15 V. Regulation and current limitation is provided for each of these DCS buses. The command unit consists of seven relays which perform the ON/OFF functions for the DCS/2. The Control Interface Unit (CIU) sends pulse commands which control these relays. The command unit sends back to the TIP 14 status bits and six analogs.

18.7.3 ELECTRICAL AND MECHANICAL BLOCK DIAGRAMS

The DCS-2 block diagrams are shown in Figures 18.7-1 and 18.7-3.

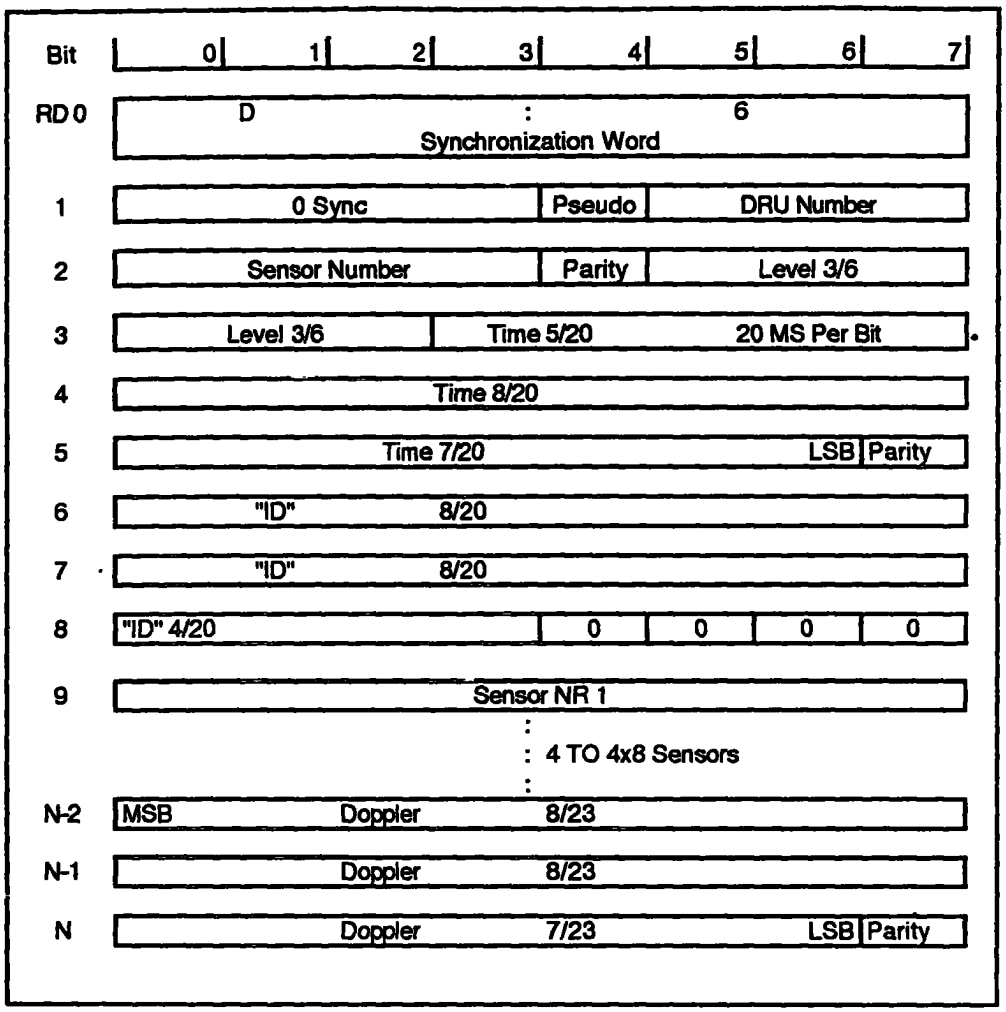

Figure 18.7-4. DCS-2 Message Data Format.

18.7.4 INTERFACE TIMING

The spacecraft shall provide the following input timing to the instrument.

18.7.4.1 Clocks

Spacecraft clocks are not to be used by the DCS/2.

18.7.4.2 Synchronization Signals

The spacecraft synchronization signals are as shown in Figure 18.7-5. The characteristics of these synchronization signals are detailed in Section 3.1.5.4 of the GIIS. The function of these synchronization signals in the instrument are as follows:

(1) Major Frame - to synchronize the instrument output data format with the start of each TIP Major Frame.

(2) A_1 Data Enable Pulse - Enables readout of the 8-bit TIP minor frame words from the DCS/2.

Synchronization Signal	Repetition Rate	Pulse Width	Standard Interface
Major Frame	32 sec.	240 µs	Fast CMOS/CMOS
A1 Data Enable	(1)	(2)	Fast CMOS/CMOS
C1 Data Clock	8320 pps	24 µs	Fast CMOS/CMOS
(1) 32 Data Enable pulses per minor frame (0.1 sec.) for DCS/2. (2) 0.9375 ms per 8 bit sample. contiguous samples will be separated by 24 µs period at the "0" state.			

Figure 18.7-5. Spacecraft Synchronization Signal Interfaces.

(3) C_1 Data Clock - Clocks the instrument output data into the TIP.

18.7.5 INSTRUMENT TELEMETRY

The DCS/2 output data signals supplied to the spacecraft fall into three categories: Analog Telemetry, Digital "B" Telemetry, and Digital "A" (instrument science) Data. The specific signals supplied by the DCS/2 shall be as described in the following paragraphs.

18.7.5.1 Analog Telemetry

The DCS/2 analog telemetry is available at the instrument interface at all times. The DCS/2 analog telemetry is clocked into the TIP telemetry 32-second subcom word 9. The analog telemetry points provided by the DCS/2 are as shown in Figure 18.7-6.

No.	Telemetry Point Name	Sub Com (sample rate)	Minor Frame	Ch No.	Range
1	RPU - Temperature	32	175	175	-20 to +80°C
2	SPU-A - Temperature	32	167	167	-20 to +80°C
3	SPU-B - Temperature	32	47	47	-20 to +80°C
4	Converter - Voltage +5V	32	238	238	0 to 5.565V
5	Converter - Voltage +12V	32	15	15	0 to 14.0V
6	Converter - Voltage -5.2V	32	31	31	0 to 10.2V
7	Converter - Voltage -12V	32	23	23	0 to 14.3V
8	Converter - Temperature	32	39	39	-20 to 80°
9	USO Oven Temperature	32	175	175	-10 to +85°C
10	USO Thermal Regulation	32	71	71	0 to 5.1V

Figure 18.7-6. DCS-2 Analog Telemetry.

18.7.5.2 Digital "B" Telemetry

The Digital B one-bit status telemetry is available at the instrument interface at all times. The 3.2 second subcom generated by the TIP samples each Digital B telemetry point once every 3.2 seconds. Word 8 of the Minor Frame will be dedicated to the sampling of the Digital B telemetry from all spacecraft components.

The Digital B telemetry points provided by the DCS/2 are as shown in Figure 18.7-7. The normal state of telemetry point 11 (Memory Overflow Status) is 'Logic "1"', which is reported as "ZERO" in any Digital B telemetry printout. When a memory overflow occurs, the state changes to 'Logic "0"' (reported as "ONE" at the beginning of the next TIP major frame, and returns to 'Logic "1"' ("ZERO") at the conclusion of that major frame). When the DCS/2 is turned ON, the state is 'Logic "0"' until the beginning of the next TIP major frame, at which time it changes to

'Logic "1"'. If memory overflow occurs simultaneously with the TIP major frame pulse, no change in telemetry occurs.

No.	Telemetry Point Name	Logic State (1) "0"	"1"	Minor Frame	Channel No.	Bit
1	DCS Relay A Status	ON	OFF	27	251	8
2	DCS Relay B Status	ON	OFF	28	28	1
3	DRU 1	ON	OFF	28	60	2
4	DRU 2	ON	OFF	28	92	3
5	DRU 3	ON	OFF	28	124	4
6	DRU 4	ON	OFF	28	156	5
7	DRU 5	ON	OFF	28	188	6
8	DRU 6	ON	OFF	28	220	7
9	DRU 7	ON	OFF	25	185	6
10	DRU 8	ON	OFF	25	217	7
11	Memory Overflow	One	Zero	28	252	8
12	DCS Time Code (MSB) (2)	1	0	29	29	1
13	Pseudo Message Status	Enable	Disable	26	186	6

Notes:
(1) Logic "0" or "High Voltage" state (5+/-.7V) is on, all Digital B telemetry reads Logic "1" when DCS-2 is OFF.
(2) MSB - TBD.

Figure 18.7-7. Digital "B" Telemetry.

18.7.5.3 Digital "A" Telemetry

The Digital A data is clocked into the spacecraft TIP whenever the "A1" Data Enable Pulse is presented to the DCS/2 encoder. The Digital A output of the DCS/2 consists of 32 8-bit TIP words per minor frame. The DCS/2 word length is 8 bits and is formatted into messages as shown in Figure 18.7-4.

The DCS/2 message length varies from 16 to 44 words depending upon the number of sensors contained in the platform transmission. Each sensor data requires 4 DCS/2 words and the number of sensors varies from a minimum of one to a maximum of eight sensors. The message length accordingly increments an additional 4 words with each additional sensor in the platform transmission.

Pseudo messages are formatted as shown in Figure 18.7-8. The format is the same as the platform format with the exception of the sensor data which is replaced with alternating strings of ones and zeros as shown in the Figure. The pseudo-message is fixed at sixteen words in length. Each message, whether platform or pseudo-message, is identified by DRU and shall be transmitted in entirety with no interleaving of message words from other DRUs.

18.7.6 COMMANDS

The DCS/2 instrument interfaces with the spacecraft CIU for command purposes. The CIU provides pulse discrete commands for all DCS/2 commands. The DCS/2 is capable of accepting either 60 ms CIU Annex (CXU) or 1.5 second CIU command pulse durations. When the DC/DC converter and one or more DRUs are ON, the DCS/2 processes received messages in real-time.

Bit	0	1	2	3	4	5	6	7
Word 0	D	Synchronization Word				6		
1	0 Sync				1	DRU Number		
2	0				Parity	Level 3/6		
3	Level 3/6		Time 5/20			20 MS Per Bit		
4	Time 8/20							
5	Time 7/20						LSB	Parity
6	Word 6							
7	Word 7							
8	Word 8							
9	Word 9							
10	Word 10							
11	Word 11							
12	Word 12							
13	MSB	Doppler 8/23						
14	Doppler 8/23							
15	Doppler 8/23						LSB	Parity

Word Content		
	Words 6, 7, 8:	1111 0000
	Words 9, 10, 11, 12:	0000 1111

Figure 18.7-8. DCS/2 Pseudo Format.

18.7.6.1 Command Descriptions

The commands utilized by the instrument are as described in Figure 18.7-9. The command sequence to place DCS/2 into normal mode is as follows.

- [DRU8N] DRU #8 ON
- [DRU7N] DRU #7 ON
- [DRU6N] DRU #6 ON
- [DRU5N] DRU #5 ON
- [DRU4N] DRU #4 ON
- [DRU3N] DRU #3 ON

- [DRU2N] DRU #2 ON
- [DRU1N] DRU #1 ON

18.7.6.2 Safe State Definition

The DCS/2 Safe State is as shown in Figure 18.7-10. The following procedure should be followed to bring DCS to safe state mode.

- [DRU1F] DRU #1 OFF
- [DRU2F] DRU #2 OFF
- [DRU3F] DRU #3 OFF
- [DRU4F] DRU #4 OFF
- [DRU5F] DRU #5 OFF
- [DRU6F] DRU #6 OFF
- [DRU7F] DRU #7 OFF
- [DRU8F] DRU #8 OFF
- *VERIFY DRUs OFF BEFORE RESUME*
- [DPMF1] PSEUDO - MESSAGE OFF

18.7.6.3 Power Down Mnemonic Sequence

18.7.6.3.1 Normal Power Down

The following sequence is used to bring power down in a non-emergency situation for DCS/2.

- [DRU8F] DRU #8 OFF
- [DRU7F] DRU #7 OFF
- [DRU6F] DRU #6 OFF
- [DRU5F] DRU #5 OFF
- [DRU4F] DRU #4 OFF
- [DRU3F] DRU #3 OFF
- [DRU2F] DRU #2 OFF
- [DRU1F] DRU #1 OFF
- *VERIFY DRUs OFF BEFORE RESUME*
- [DCPAF] DCS RELAY A OFF

- [DCPBF] DCS RELAY B OFF

18.7.6.3.2 Emergency Power Down

In the event of an emergency, the following should be followed to power down DCS/2.

- [DCPAF] DCS RELAY A OFF
- [DCPBF] DCS RELAY B OFF
- [DRU1F] DRU #1 OFF
- [DRU2F] DRU #2 OFF
- [DRU3F] DRU #3 OFF
- [DRU4F] DRU #4 OFF
- [DRU5F] DRU #5 OFF
- [DRU6F] DRU #6 OFF
- [DRU7F] DRU #7 OFF
- [DRU8F] DRU #8 OFF

No.	Command Function	Command Mnemonic	Command Description
1	DCS ON - A	DCPAN	Turns DC/DC converter "ON" via Relay A and, if Relay B is off, resets Pseudo - Message to OFF and Receiver Bandwidth to 1.
2	DCS OFF - A	DCPAF	Turns DC/DC converter "OFF" via Relay A if DCS-B is in "OFF" position.
3	DCS ON - B	DCPBN	Turns DC/DC converter "ON" (Redundant) via Relay B.
4	DCS OFF - B	DCPBF	Turns DC/DC converter "OFF" via Relay B if DCS-A is in "OFF" position and if Relay A is OFF, resets Pseudo - Message to OFF and Receiver Bandwidth to 1.
5	DRU 1 ON	DRU1N	Power DRU if DCS-2 A or B is On.
6	DRU 1 OFF	DRU1F	Removes power form DRU 1.
7	DRU 2 ON	DRU2N	Powers DRU 2 if DCS A or B is On.
8	DRU 2 OFF	DRU2F	Removes Power from DRU 2.
9	DRU 3 ON	DRU3N	Powers DRU 3 if DCS-2 A or B is On.
10	DRU 3 OFF	DRU3F	Removes Power from DRU 3.
11	DRU 4 ON	DRU4N	Powers DRU 4 if DCS-2 A or B is On.
12	DRU 4 OFF	DRU4F	Removes Power from DRU 4.
13	DRU 5 ON	DRU5N	Powers DRU 5 if DCS-2 A or B is On.
14	DRU 5 OFF	DRU5F	Removes Power from DRU 5.
15	DRU 6 ON	DRU6N	Powers DRU 6 if DCS-2 A or B is On.
16	DRU 6 OFF	DRU6F	Removes Power from DRU 6.
17	DRU 7 ON	DRU7N	Powers DRU 7 if DCS-2 A or B is On.
18	DRU 7 OFF	DRU7F	Removes Power from DRU 7.
19	DRU 8 ON	DRU8N	Powers DRU 8 if DCS-2 A or B is On.
20	DRU 8 OFF	DRU8F	Removes Power from DRU 8.
21	PSEUDO MSG ON	DCPMN	This command shall enable Control Unit generation of pseudo-messages which shall identify interfering signals. A maximum of 2 Data Recovery Units shall generate the pseudo-messages; pseudo-messages shall be generated at 20.9 + 0.5 second intervals by eac
22	PSEUDO MSG OFF	DPMF1	This command shall disable the generation of pseudo-messages by the Data Recovery Units.
23	PSEUDO MSG OFF	DPMF2	Disables Pseudo-Message Processing (Redundant Command).

Figure 18.7-9. DCS/2 Operational Commands.

DCS Data Recovery Unit 1 OFF
DCS Data Recovery Unit 2 OFF
DCS Data Recovery Unit 3 OFF
DCS Data Recovery Unit 4 OFF
DCS Data Recovery Unit 5 OFF
DCS Data Recovery Unit 6 OFF
DCS Data Recovery Unit 7 OFF
DCS Data Recovery Unit 8 OFF

Figure 18.7-10. DCS/2 Safe -State Definition.

18.7.6.4 Power Up Mnemonic Sequence

18.7.6.4.1 Routine Power Up

The recommended power turn-on sequence is as follows. Note: The constraint requirements of Section 18.7.14 must be followed during power up.

- [DCPAN] DCS RELAY A ON
- [DRU8N] DRU #8 ON
- [DRU7N] DRU #7 ON
- [DRU6N] DRU #6 ON
- [DRU5N] DRU #5 ON
- [DRU4N] DRU #4 ON
- [DRU3N] DRU #3 ON
- [DRU2N] DRU #2 ON
- [DRU1N] DRU #1 ON
- *VERIFY DRUs ON BEFORE RESUME*
- [DCPBN] DCS RELAY B ON

18.7.6.4.2 Power Up from Safe State

The following sequence of commands should be utilized when powering DCS/2 from safe state.

- [DRU8N] DRU #8 ON
- [DRU7N] DRU #7 ON
- [DRU6N] DRU #6 ON
- [DRU5N] DRU #5 ON

- [DRU4N] DRU #4 ON
- [DRU3N] DRU #3 ON
- [DRU2N] DRU #2 ON
- [DRU1N] DRU #1 ON

18.7.6.4.3 Emergency Turn-On

In an emergency, the DCS/2 can be turned on using the following sequence.

- [DCPAN] DCS RELAY A ON
- [DRU8N] DRU #8 ON
- [DRU7N] DRU #7 ON
- [DRU6N] DRU #6 ON
- [DRU5N] DRU #5 ON
- [DRU4N] DRU #4 ON
- [DRU3N] DRU #3 ON
- [DRU2N] DRU #2 ON
- [DRU1N] DRU #1 ON
- *VERIFY DRUs ON BEFORE RESUME*
- [DCPBN] DCS RELAY B ON

18.7.7 MIRP PROCESSING

The DCS/2 does not use the spacecraft MIRP.

18.7.8 POWER INPUT AND PROFILE

18.7.8.1 Power Sources

(1) The main power required by the DCS/2 is taken from the +28 Volt Main Bus.

(2) The +28 Volt Analog Telemetry Bus is used to power the analog temperature telemetry circuits.

(3) All commands and TIP interfaces are powered from the +10 Volt Bus.

18.7.8.2 Power Dissipation

(1) Orbit average power required by the instrument from the +28 Volt Main Bus for the specified operating modes is as follows:

Typical Operation				
Standby (turn-on)	Standby	1 DRU	2 DRUs	8 DRUs*
21.75W	16.28W	17.67W	19.06W	27.4W

*Each DRU = 1.39W

(2) There is no heater power required by the instrument from the +28 Volt Main Bus.

(3) The power profile on the +28 Volt Main Bus for the DCS/2 is as shown in Figure 18.7-11.

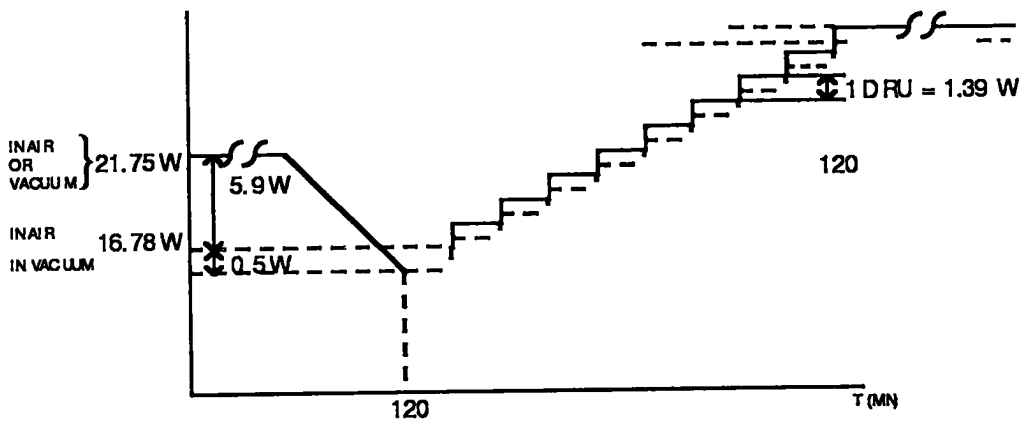

Figure 18.7-11. +28 Volt Main Bus Power Profile.

18.7.9 ACTIVATION AND EVALUATION (A&E) PROCEDURES AND TIMELINE

After launch, the DCS/2 remains in the OFF mode until the spacecraft systems have been activated and evaluated. It is planned that the DCS/2 will be turned ON approximately three days after orbit insertion. The activation sequence are identified in section 18.7.6.4.

18.7.10 OPERATIONAL MODES

18.7.10.1 Pre-launch and Launch

This mode establishes the GO/NO GO condition of the DCS/2. Successful completion of final flight tests for launch is required. The DCS/2 is in the OFF mode for launch. Temperatures are maintained within limits during the launch phase by the spacecraft thermal control electronics.

18.7.10.2 Spacecraft Activation Mode

This mode is the sequential turn ON and evaluation of the DCS/2. The sequence of events required to establish this mode have not been defined at this time.

18.7.10.3 Mission Mode

This mission mode is started after the DCS/2 has successfully completed the activation mode. This is the mode that the DCS/2 will remain in during its operational life.

18.7.10.4 DCS/2 OFF Mode

This is the sequential turn OFF mode for the DCS/2. This mode is not to be established unless major difficulties occur with the DCS/2 or spacecraft. The turn off sequences to be followed (depending on situation) are located in 18.7.6.3.

18.7.11 CALIBRATION REQUIREMENTS

The DCS/2 has no on-orbit calibration requirements.

18.7.12 ROUTINE COMMAND REQUIREMENTS

Command requirements are shown in Section 18.7.5 of this document.

18.7.13 EVALUATION OF NOMINAL PERFORMANCE AND TREND REQUIREMENTS

On-orbit temperature and voltage ranges of analog telemetry points within the DCS/2 are shown in Figure 18.7-6.

18.7.14 CONSTRAINTS

The various modes of operation have specific requirements (constraints) that must be complied with prior to the initiation of a mode. Once a mode has been established, additional constraints are required in order to maintain a safe mode. The termination of a mode also has specific constraints that must be met. The following constraints discussion is based primarily on the requirements as defined by the DCS/2 specifications.

18.7.14.1 Pre-launch and Launch Mode

The prelaunch and launch mode constraints are as follows:

(a) Successful completion of GO/NO GO Tests.

(b) DCS/2 in OFF mode for launch.

(c) Launch Temperature.

18.7.14.2 Activation Mode

The activation mode constraints are as follows:

(a) The DCS/2 is capable of processing all commands simultaneously; however normal commanding is composed of single, sequential commands.

(b) Prior to turn ON, DCS/2 temperature must be stable between -5°C to +45°C.

(c) A 120-minute warm up period is required before valid telemetry data is obtainable. More than 2 DRUs shall not be turned ON before warm up is complete.

(d) DCS/2 temperature limits during all modes of powered operations are -5°C to +45°C.

18.7.14.3 Mission Mode

The mission mode constraints are as follows:

(a) Activation mode has been successfully completed.

(b) DCS/2 has been evaluated and is acceptable for turnover of responsibility to NOAA/NESS.

18.8 SEARCH AND RESCUE SATELLITE (SARSAT) INSTRUMENT PACKAGE, SEARCH AND RESCUE PROCESSOR (SARP-2), SEARCH AND RESCUE REPEATER (SARR)

18.8 SEARCH AND RESCUE SATELLITE (SARSAT) INSTRUMENT PACKAGE

General aviation aircraft are required to carry Emergency Locator Transmitters (ELTs), which are triggered by the impact of a crash and broadcast a signal at 121.5 and 243 MHz. These transmissions can be heard as siren like sounds on receivers of aircraft which may be flying over the transmitter. In addition, certain large ships are also required to carry 121.5 MHz Emergency Position Indicating Radio Beacons (EPIRBs) which also transmit the siren like sound. Some oceangoing vessels voluntarily carry the EPIRBs.

It has been recognized for many years that receipt of ground transmissions by overflying satellites includes a Doppler shift of the transmitted frequency due to the velocity of the satellite relative to the transmitter. This Doppler shift information can be used to locate the transmitter. The Search and Rescue (SAR) Instrument Package first flown on NOAA-E and subsequent NOAA satellites carries a repeater for receiving and rebroadcasting the 121.5 and 243 MHz signals to a ground station where they can be detected and located by measuring their Doppler shift. However, these ELTs and EPIRBs were conceived prior to the satellite system and lack specifications which assure reliable detection through the satellite. Even so, by the launch of NOAA-H, over 1,000 people have been saved by SAR forces making use of satellite-derived alerts and locations.

A 406 MHz SAR system has been designed specifically to work with the satellites. The NOAA satellite SAR Instrument Package carries a 406 MHz processor which receives transmissions from 406 MHz ELTs and EPIRBs, recovers their digital message, measures the Doppler shift, and both stores the data for later transmission and also transmits it in real time. A receiver for the 406 MHz band is also included in the repeater. This new system utilizes distress transmitters (ELTs and EPIRBs) designed to be compatible with the satellite and the system provides full global coverage. The 406 MHz system was demonstrated and evaluated and declared ready for operational use by the time of the NOAA-H launch. Beginning with NOAA-H, the 406 MHz processor began utilizing a solid state memory for storage of the global data. Prior to NOAA-H, the processors used the spacecraft tape recorder for global storage.

NOAA-K carries an improved 406 MHz processor, designated SARP-2. This unit has improved performance in system capacity, bandwidth, and protection against interference.

18.8.1 FUNCTIONAL DESCRIPTION

The SARSAT Instrument Package for the NOAA-K spacecraft consists of antennas/ diplexer/ filters, a search and rescue repeater (SARR), and a search and rescue processor (SARP-2) as shown in Figure 18.8-1. The SARR/SARP-2 functional block diagram with commands and telemetry is shown in Figure 18.8-2.

- SARSAT Antennas
  - SRA receive antennas
    - 121.5/243 MHz
    - 406 MHz
  - UDA receive antenna
    - 401.65/406.050 MHz
  - SLA transmitter antenna
    - 1544.5 MHz
- SARR
- SARP-2

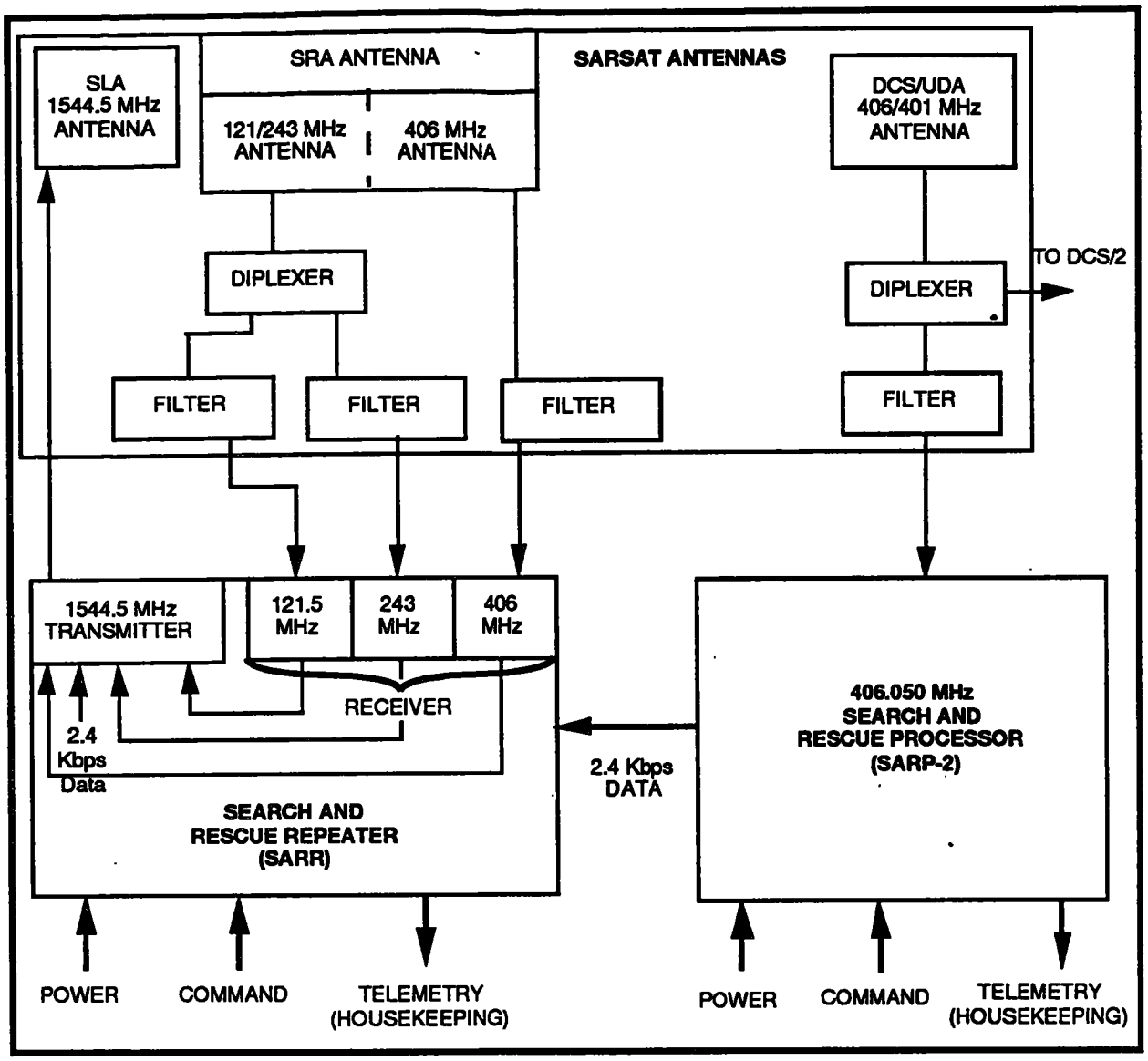

Figure 18.8-1. SARSAT Instrument Package.

The SARP-2, which is flown on NOAA-K and thereafter, provides the stored data interleaved with the real-time data in the 2.4 kbps data stream sent through the 1544.5 MHz downlink transmitter. The output of the SARSAT Instrument Package is four-frequency, multiplexed signals on the 1544.5 MHz downlink transmitter.

(a) 2.4 kbps data
(b) 121.5 MHz band translated
(c) 243 MHz band translated
(d) 406 MHz band translated

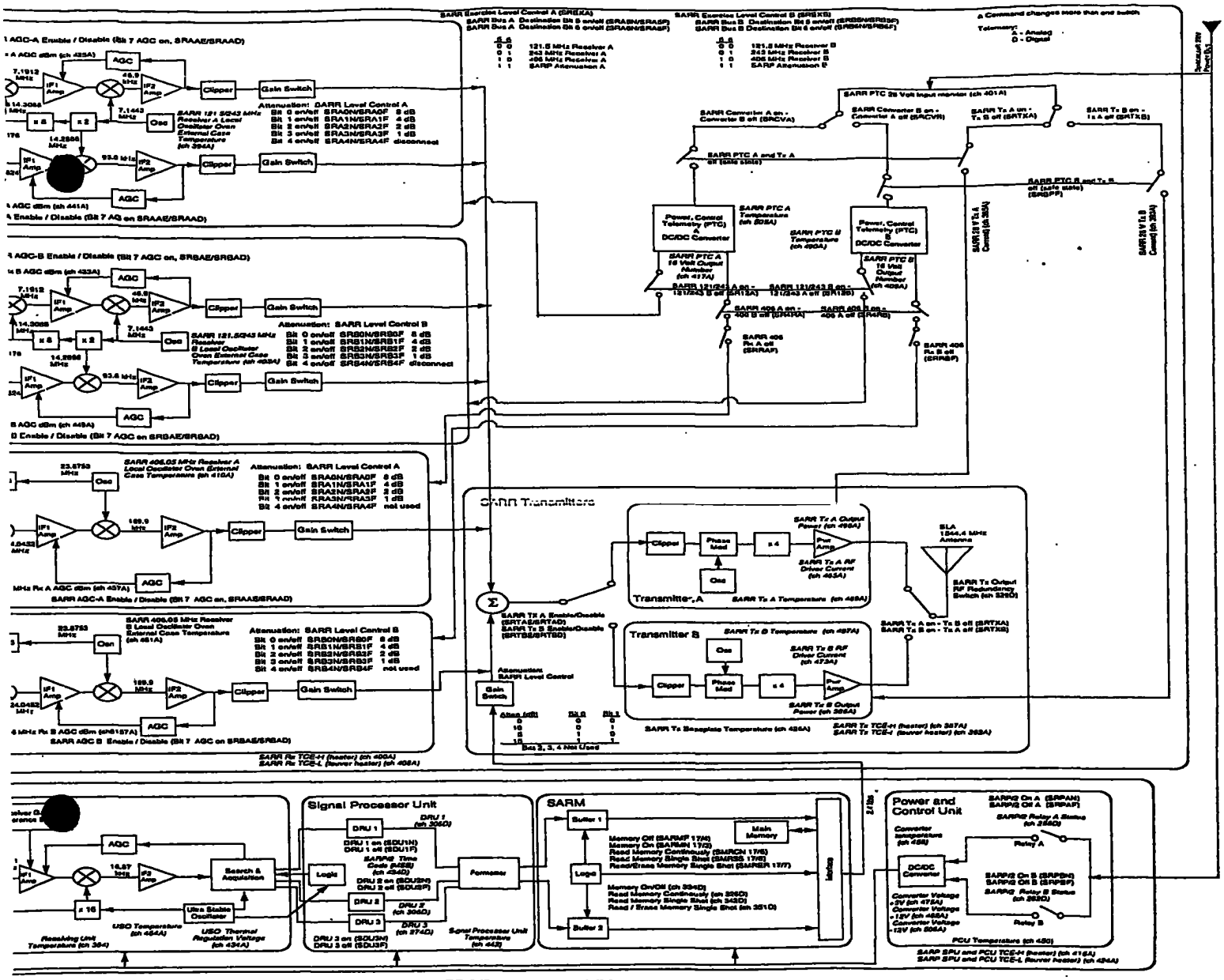

Figure 18.8-2. SARR/SARP-2 Functional Block Diagram

The SARR instrument will output SARP-2 data and data stored in the SARP memory. The SARP-2 2.4 kbps data output consists of a Doppler frequency measurement, appropriately time-tagged and includes the SAR data message from the ELT/EPIRB.

For the regional coverage mode, 2.4 kbps real-time data are transmitted to a Local User Terminal (LUT) via the SAR Repeater downlink. Global area coverage is provided by storing global 2.4 kbps data in a 406 Processor memory; these data are also transmitted to a LUT via the SAR Repeater downlink, but only during times when there is no regional coverage 2.4 kbps data to be transmitted.

18.8.2 SYSTEM DESCRIPTION

The orbiting SARSAT Instrument Package receives signals from ground-based ELTs/EPIRBs and returns them to both raw form and preprocessed form (406 MHz Experimental Units only) to one or more ground stations. Figure 18.8-1 shows the SARSAT Instrument Package which consist of three elements:

(a) SARSAT Antennas;
(b) SAR Repeater (SARR) and
(c) SAR Processor (SARP-2).

The SARR and SARP-2 block diagrams are shown in Figure 18.8-2.

18.8.2.1 SARSAT Antennas

Figure 18.8-3 illustrates the antenna subsystem which consists of the:

(a) SAR Receiver Antenna (SRA);
(b) Data Collection System Ultra High Frequency (UHF) Antenna referred to as DCS/UDA and
(c) SAR L-Band Transmitter Antenna (SLA).

18.8.2.1.1 SARSAT Receiver Antennas - The SRA feeding the SARR consists of two coaxial Quadrifiliar designs. The outer quadrifiliar operates at two frequencies, 121.5 MHz and 243.0 MHz. The inner quadrifiliar operates at 406.05 MHz. The DCS/UDA is a quadrifiliar design and operates at 406.050 MHz for SARP-2 and also 401.650 MHz for the Data Collection System/2 (which is not part of the SARSAT instrument package).

The Search and Rescue Receiver antennas are mounted on a boom which is deployed clear of the other spacecraft instruments, antennas, and solar array. There are four receive antenna ports for the SARSAT instruments-three for the SARR, and one for the SARP-2.

The 243 MHz and 406 MHz for both SRA and UDA receiving antenna patterns are shaped partially to compensate for increased signal path losses for ELTs at increasing distances from the subsatellite point. Figure 18.8-4 lists the antenna parameters.

18.8.2.1.2 L-Band Transmitter Antenna - The L-Band transmitter antenna is a small 1544.5 MHz quadrifiliar helix located on the Earth-facing side of the spacecraft which has a single lobe pattern for full Earth coverage. There is one transmit antenna port for connection to the SLA of the SARR. Figure 18.8-5 lists the antenna parameters.

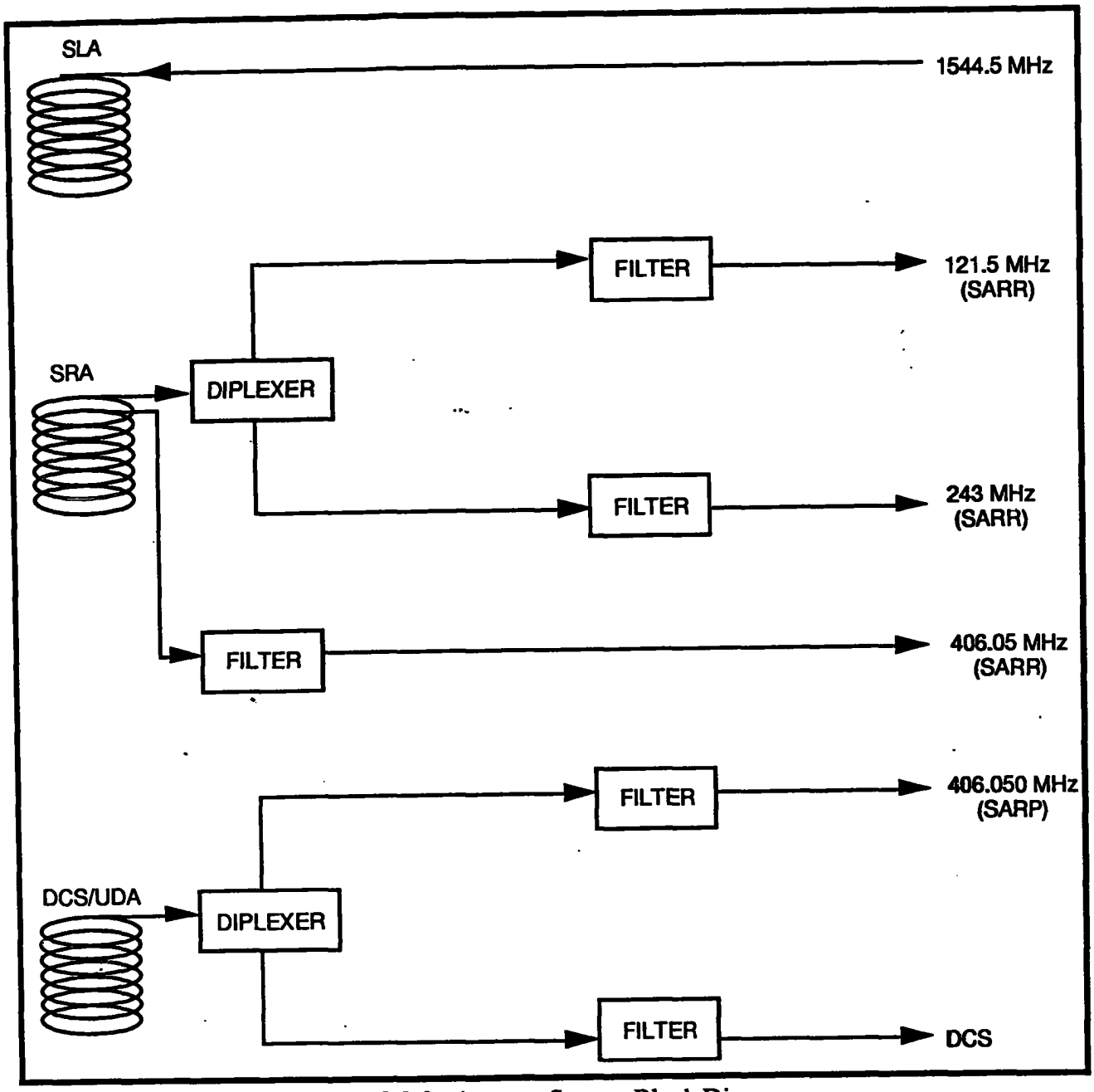

Figure 18.8-3. Antenna System Block Diagram.

Parameters	Values	
Operation Frequencies	SRA Antenna	121.5, 243.0, 406.05 MHz
	DCS/UDA Antenna	406.050 MHz
Minimum 1 dB Bandwidth	SRA Antenna	+/-20 KHz at 121.5 MHz +/-30 KHz at 243.0 MHz +/-50 KHz at 406.05 MHz
	DCS/UDA Antenna	+/-50 KHz at 406.050 MHz

Figure 18.8-4. SARSAT Receive Antennas Parameters.

Parameters	Values			
Spacecraft Emission Limits	Max Signal Level (dBm)	121.5 MHz Band	243.0 MHz Band	406.05 MHz Band
	-100	118.000 - 120.000	236.000 - 240.000	385.000 - 401.000
	-125	120.000 - 121.450	240.000 - 242.925	401.000 - 405.900
	-145	121.450 - 121.550	242.925 - 243.075	405.900 - 406.200
	-125	121.550 - 123.000	243.075 - 246.000	406.200 - 411.000
	-100	123.000 - 125.000	246.000 - 250.000	411.000 - 425.000
VSWR	Less than 1.6:1			
Isolation	Greater than 20 dB at all frequencies.			
Polarization	Right-hand circular			
Axial Ratio and Gain Patterns	Contained in COSPAS-SARSAT Document C/S T.003, Issue 2, December 1992, Section 5.2, SARSAT Antennas			

Figure 18.8-4. SARSAT Receive Antennas Parameters (Continued).

Parameters	Values
Operation Frequency	1544.5 MHz
Bandwidth	± 1 MHz
Power Handling	10 Watts
VSWR	1.5:1
Polarization	Left-hand circular
Axial Ratio	1.5 dB in Coverage Region
Gain Patterns	Contained in COSPAS-SARSAT Document C/S T.003, Issue 2, December 1992, Section 5.2, SARSAT Antennas

Figure 18.8-5. SARSAT L-Band Transmit Antenna Parameters.

18.8.2.2 SAR Repeater (SARR)

As shown in Figure 18.8-1, the SARR subsystem receives the ELT/EPIRB signals on 121.5, 243.0, and 406.05 MHz, down converts to selected intermediate frequencies, remodulates this data, and retransmits on 1544.5 MHz (repeater data mode). The baseline concept is that each receiver is a dual conversion unit with automatic gain control (AGC) which converts the received bandwidth down to a frequency range between 35 kHz and 210 kHz. These bands are then summed with 2.4 K-bit data from the SAR 406 MHz processor and phase modulated on the 1544.5 MHz downlink carrier frequency. The modulation level of each band is independently adjustable to account for any long-term changes either in the operational procedure or the system noise environment.

- SARR Input Parameters - Figure 18.8-6 lists the Input Parameters.
- SARR Output Parameters - Figure 18.8-7 lists the Output Parameters.
- SARR Transmission Impairment Limits - Figure 18.8-8 lists the Transmission Impairment Limits.
- SARR In-Orbit Adjustments - To optimize the system after initial on-orbit tests, a capability to adjust the power level of each converted frequency band prior to modulation on the downlink is provided. The nominal modulation indices for the SARR channels are 0.22±10%, 0.44±10%, 0.44±10%, 0.22±10% for the 2.4 kHz, 121.5 MHz, 243 MHz, and 406 MHz channels, respectively. The composite modulation index is 0.734 radians rms.

Parameters	Values
Frequency	121.5, 243, 406.05 MHz
Bandwidth (1 dB)	25 KHz - 121.5 MHz 46 KHz - 243 MHz 80 KHz - 406.05 MHz
Signal Strength	-179 to -137 dBw - 121.5 MHz -182 to -149 dBw - 243 MHz -165 to -137 dBw - 406.05 MHz
Automatic Level Control	25 ms Attach 75 ms Decay
Transient Recovery Time	2 ms after removal of -60 dBw input signal at any frequency
Processed Data	Retransmission of SARP-M data bit stream of 2.4 kbps, Coded Bi ϕ L

Figure 18.8-6. SARR Input Parameters.

Parameters	Values
Frequency	1544.5 MHz
Frequency Stability	Long Term ± 1 part of 10 (+6) Short Term ± 1 part in 10 (+9) in 10 minutes
RF Power	8 watts minimum 10 watts maximum
Modulation Index	0.7 rad rms 2.0 rad peak Peak to rms ratio <15 dB
Harmonics	50 dB below carrier power
Phase Jitter	Less than 10° rms at 50 Hz bandwidth
RF Power Output (rms) Variation	±5% for any combination of input signals or any type of input signal

Figure 18.8-7. SARR Output Parameters.

Parameters	Values
Linearity	Less than -170 dBw for intermodulation products produced for two equal test tones of -90 dBW
Gain Variation	± 1 dB within each frequency band
Group Delay Slope	50 μ s/KHz over 1 KHz band for 121.5 MHz 25 μ s/KHz over 2 KHz band for 243 MHz 13 μ s/KHz over 2 KHz band for 406 MHz
SARR Transmit Frequency Variation	Less than 1 part in10 (+9) in 10 minute period. Not more than 1 part in 10 (+6) over life of SARR of SARR
Image Rejection	RF - greater than 120 dB IF - greater than 80 dB
Spurious Response	In band wideband spurious noise - see additive noise Discrete spurious - less than -176 dBW at receiver input

Figure 18.8-8. SARR Transmission Impairment Limits.

Each channel includes a commandable attenuator that allows the modulation index to be varied independently, subject to the constraint that the composite rms modulation index shall not exceed 0.74 radians.

The 2.4 kHz channel is controllable in 5 dB steps, whereas the 121.5, 243, and 406 MHz channels are controllable in 1 dB steps.

18.8.2.3 SAR Processor (SARP-2)

The 406.050 MHz on-board processor (see Figure 18.8-1) receives the 406 MHz transmissions from distress beacons and translates to an Intermediate Frequency (IF) using a double conversion. The IF signal is demodulated in a phase-lock loop to recover the data; the carrier frequency is measured and the data time tagged. For the regional coverage mode, real-time data are transmitted to a LUT via the SARR downlink. Global area coverage is provided by storing global data in a 406 Processor memory; these data are also transmitted to a LUT via the SARR downlink, but only during times when there is no regional coverage data to be transmitted.

Figure 18.8-9 shows the block diagram of the 406.050 MHz processor. SARP-2 system parameters are shown in Figure 18.8-10. The received signal is fed first to the receiver power unit (RPU) which utilizes a double conversion process to translate the signal to a lower frequency. The receiver is a constant gain type, linear over a 23 dB dynamic range.

The signal processing unit (SPU) is a fast-fourier transform which searches the full 80 kHz bandwidth. When a signal is detected, the control unit assigns the signal to a Data Recovery Unit (DRU) on the basis of an algorithm designed to optimize the multiple-access performance. The algorithm for assignment is based on the frequency and level of input to the receiver as well as the current assignment state of the DRUs.

When a signal is assigned to a DRU, the voltage controlled oscillator (VCO) is presteered to within the lock-in range by a voltage which is proportional to the signal frequency as determined by the search unit. After VCO lock-up, the signal is demodulated and fed to a bit synchronizer which supplies the clock for subsequent digital processing. When the clock is available, the sync word contained in the message is detected and the remaining digital message processed. Doppler frequency is determined by counting the VCO signal for a specified time base referenced to the processor ultrastable oscillator (USO).

The processor formatter outputs a composite message made up of eight 24-bit words. Messages are organized in to either long or short messages depending on the total number of data bits to be transmitted. The expected message length is determined by the processor by detecting a single bit flag indicating message length contained in the received message from the experimental ELT/EPIRB. The formatted message output is sent to the main memory and to the interface unit where it is transferred to the SARR 2.4 kbps input port.

The processor is implemented physically into two units with a total weight of 24.5 kg, and a total volume of 37 liters. Power consumption is 19.9 watts.

18.8.3 ELECTRICAL AND MECHANICAL BLOCK DIAGRAMS

The SARSAT system block diagram is shown in Figure 18.8-2.

18.8.4 INTERFACE TIMING

The spacecraft provided clocks and synchronization signals are not utilized by the SARR or SARP-2.

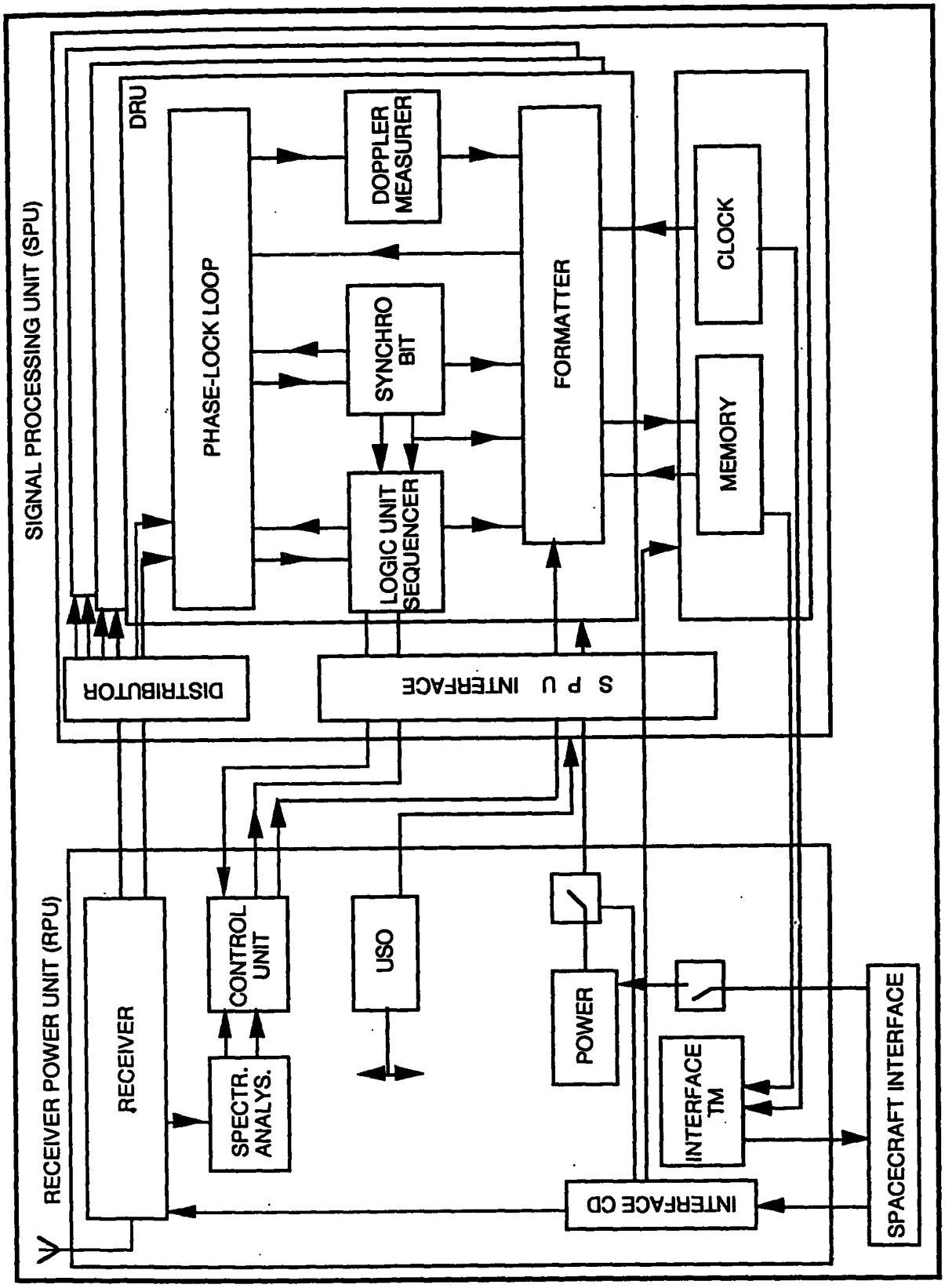

Figure 18.8-9. SARP-2 Block Diagram.

Parameters	Values	
Input Frequency	406.050 ± 40 MHz	
Input Signal Strength	-108 to -131 dBm	
Frequency Interference Tolerance	Frequency (MHz)	Maximum Interference Signal Level (dBm)
	1-15	0
	15-375	-20
	375-385	-60
	385-401	-100
	401-411	-145
	411-425	-100
	425-435	-60
	435-1,000	-20
	1,000-10,000	0
Memory Capacity	394,000 bits (2048 Long or Short messages)	

Figure 18.8-10. SARP-2 System Parameters.

18.8.5 TELEMETRY

18.8.5.1 SARR Telemetry

The output data signals supplied by the SARR to the spacecraft fall into two categories: Analog telemetry and Digital "B" telemetry. The specific signals supplied by the SARR are detailed in the following paragraphs.

18.8.5.1.1 Analog Telemetry - The analog telemetry shall be available at the instrument interface at all times when the instrument is ON. Three different subcom types (32, 16, and 1 seconds) generated by the TIP will be used to sample all spacecraft analog telemetry.

The analog telemetry points provided by the SARR are shown in Figure 18.8-11. Twenty-two analog telemetry channels are required by the SARR to monitor the health of the instrument. Descriptions of each telemetry point are detailed below.

Number	Telemetry Point Name	Analog Telemetry Channel Number	Analog Subcom	Minor Frame
1	SARR Tx A RF Driver Current	385, 465	16-2	1, 81
2	SARR Tx B RF Driver Current	393, 473	16-2	9, 89
3	SARR PTC 28 Volt Input Monitor	401	16-2	17
4	SARR PTC A 16V Output Monitor	417	16-2	33
5	SARR PTC B 16 V Monitor	409	16-2	25
6	SARR 121.5 MHz Rx A AGC Volts	425	16-2	41
7	SARR 121.5 MHz Rx B AGC Volts	433	16-2	49
8	SARR 243 MHz Rx A AGC Volts	441	16-2	57
9	SARR 243 MHz Rx B AGC Volts	449	16-2	65
10	SARR 406 MHz Rx A AGC Volts	457	16-2	73
11	SARR 406 MHz Rx B AGC Volts	481	16-2	97
12	SARR Transmitter A Temperature	489	16-2	105

Figure 18.8-11. SARR Analog Telemetry.

Number	Telemetry Point Name	Analog Telemetry Channel Number	Analog Subcom	Minor Frame
13	SARR Transmitter B Temperature	497	16-2	113
14	SARR PTC A Temperature	505	16-2	121
15	SARR PTC B Temperature	490	16-2	106
16	SARR Tx A Output Power	498	16-2	114
17	SARR Tx B Output Power	386	16-2	2
18	SARR 121/243 MHz Receiver A Local Oscillator Oven External Case Temperature	394	16-2	10
19	SARR 121/243 MHz Receiver B Local Oscillator Oven External Case Temperature	402	16-2	18
20	SARR 406 MHz Receiver A Local Oscillator Oven External Case Temperature	410	16-2	26
21	SARR 406 MHz Receiver B Local Oscillator Oven External Case Temperature	418	16-2	34
22	SARR Tx Baseplate Temperature	426	16-2	42

Figure 18.8-11. SARR Analog Telemetry (Continued).

(1) SARR Tx A RF Driver Current - When transmitter "A" is ON, this telemetry voltage is an analog of the DC current drawn by the transmitter "A" RF driver amplifier from the transmitter "A" regulated power supply. When transmitter "A" is OFF, this telemetry voltage is 0 $\pm$ 0.5V.

(2) SARR Tx B RF Driver Current - The description in (1) above applies, substituting "B" for "A".

(3) SARR PTC 28 Volt Input Monitor - This telemetry voltage is an analog of the +28V Main Bus voltage at the input to either or both PTCs, independent of SARR ON/OFF status.

(4) SARR PTC A 16 Volt Output Monitor - This telemetry voltage is an analog of the PTC "A" DC/DC converter output voltage, independent of SARR ON/OFF status.

(5) SARR PTC B 16 Volt Output Monitor - The description in (4) above applies, substituting "B" for "A".

(6) SARR 121.5 MHz Rx A AGC Volts - When 121.5 MHz receiver "A" is powered, this telemetry voltage is an analog of the gain control voltage to the 121.5 MHz receiver "A" I.F. amplifiers. The analog relationship is independent of whether the receiver is in AGC mode or in fixed-gain mode. When 121.5 MHz receiver "A" is unpowered, this telemetry voltage is 0 $\pm$ 0.5V.

(7) SARR 121.5 MHz Rx B AGC Volts - The description in (6) above applies, substituting "B" for "A".

(8) SARR 243 MHz Rx A AGC Volts - The description in (6) above applies, substituting "243" for "121.5".

(9) SARR 243 MHz Rx B AGC Volts - The description in (8) above applies, substituting "B" for "A".

(10) SARR 406.05 MHz Rx A AGC Volts - If the SARR contains a functional receiver in the 406.05 MHz receiver "A" position, the description in (6) above applies, substituting "406.05" for "121.5". If the SARR contains a dummy in the 406.05 MHz receiver "A" position, this telemetry voltage is 0 ± 0.5V.

(11) SARR 406.05 MHz Rx B AGC Volts - The description in (10) above applies, substituting "B" for "A".

(12) SARR Tx A Temperature - When the +28V analog temperature telemetry bus is ON, this telemetry voltage is an analog of the temperature of a point internal to transmitter "A", located near the final RF power transistor. The analog relationship is independent of the SARR ON/OFF status. When the +28V analog temperature telemetry bus is OFF, this telemetry voltage is 0 ± 0.5V.

(13) SARR Tx B Temperature - The description in (12) above applies, substituting "B" for "A".

(14) SARR PTC A Temperature - When the +28V analog temperature telemetry bus is ON, this telemetry voltage is an analog of the temperature of a point in the DC/DC converter in PTC "A". The analog relationship is independent of the SARR ON/OFF status. When the +28V analog temperature telemetry bus is OFF, this telemetry voltage is 0 ± 0.5V.

(15) SARR PTC B Temperature - The description in (14) above applies, substituting "B" for "A".

(16) SARR Tx A Output Power - When transmitter "A" is ON, this telemetry voltage is an analog of the RF power from the final RF power transistor to the low-pass filter and output isolator in transmitter "A". When transmitter "A" is OFF, this telemetry voltage is 0 ± 0.5V.

(17) SARR Tx B Output Power - The description in (16) above applies, substituting "B" for "A".

(18) SARR 121.5/243 MHz Receiver A Local Oscillator Oven External Case Temperature - The local oscillator subassembly of the 121.5/243 MHz receiver "A" assembly contains a crystal oscillator housed in a temperature-controlled oven. When the +28V analog temperature telemetry bus is ON, this telemetry voltage is an analog of the temperature of a point on the outside of the case of the temperature-controlled oven. The analog relationship is independent of the SARR ON/OFF status. When the +28V analog temperature telemetry bus is OFF, this telemetry voltage is 0 ± 0.5V.

(19) SARR 121.5/243 MHz Receiver B Local Oscillator Oven External Case Temperature - The description in (18) above applies, substituting "B" for "A".

(20) SARR 406.05 MHz Receiver A Local Oscillator Oven External Case Temperature - If the SARR contains a functional receiver in the 406.05 MHz receiver "A" position, the description in (18) above applies, substituting "406.05" for "121.5/243". If the SARR contains a dummy in the 406.05 MHz receiver "A": position, this telemetry voltage is 0.9 ± 0.5V when the +28V analog temperature telemetry bus is ON, and 0 ± 0.5V when OFF.

(21) SARR 406.05 MHz Receiver B Local Oscillator Oven External Case Temperature - The description in (20) above applies, substituting "B" for "A".

(22) SARR Tx Baseplate Temperature - When the +28V analog temperature telemetry bus is ON, this telemetry voltage is an analog of the temperature of a point near the center of the surface of the transmitter assembly base plate. The surface is that which faces the inside of the ESM. The analog relationship shall be independent of the SARR ON/OFF status. When the +28V analog temperature telemetry bus is OFF, this telemetry voltage is 0 ± 0.5V.

18.8.5.1.2 Digital "B" Telemetry - The Digital "B" one-bit status telemetry is available at the instrument interface at all times. The 3.2-second subcom generated by the TIP samples each Digital "B" telemetry point once every 3.2 seconds. Words 8 and 12 of the TIP Minor Frame are dedicated to the sampling of Digital "B" telemetry from all spacecraft components.

Four Digital "B" telemetry points are required by the SARR. The Digital "B" telemetry points provided by the SARR shall be as shown in Figure 18.8-12. A description of each telemetry point is provided below.

Number	Telemetry Point Name	Digital "B" Channel Number	State	
			Logic "1" (0 volts)	Logic "0" (+5 volts)
1	SARR 121.5 MHz Redundancy Switch	257	A	B
2	SARR 243 MHz Redundancy Switch	281	A	B
3	SARR 406 MHz Redundancy Switch	305	A	B
4	SARR Tx Output RF Redundancy Switch	329	A	B

Figure 18.8-12. SARR Digital "B" Telemetry.

(1) SARR 121.5 MHz RF Redundancy Switch - This point reports which of the two redundant 121.5 MHz receivers is connected to SARR J8, the interface with the 121.5 MHz RF filter, RFF-5. This telemetry point provides valid data in all SARR modes.

(2) SARR 243 MHz RF Redundancy Switch - This point reports which of the two redundant 243 MHz receivers is connected to SARR J9, the interface with the 243 MHz RF filter, RFF-4. This telemetry point provides valid data in all SARR modes.

(3) SARR 406.05 MHz RF Redundancy Switch - This point reports which of the two redundant 406.05 MHz receivers is connected to SARR J10, the interface with the 406.05 MHz RF filter, RFF-3. This telemetry point provides valid data in all SARR modes.

(4) SARR Tx Output RF Redundancy Switch - This points reports which of the two redundant transmitters is connected to the SARR J11, the interface with the SLA. This telemetry point provides valid data in all SARR modes.

18.8.5.1.3 Digital "A" Telemetry - The SARR does not supply Digital "A" data to the spacecraft.

18.8.5.2 SARP-2 Telemetry

The SARP-2 outputs the following three categories of output signals: 1) Analog Telemetry, 2) Digital "B" Telemetry, and 3) Digital (Platform) Data to the SARR. The specific signals supplied by the SARP-2 are as follows.

18.8.5.2.1 Analog Telemetry - The analog telemetry is available at the instrument interface at all times. Three different subcoms (32, 16, and 1 second) generated by the TIP are used to sample all spacecraft analog telemetry.

The analog telemetry points provided by the SARP-2 are as shown in Figure 18.8-13. Descriptions of the telemetry points are given below.

Number	Telemetry Point Name	Sub Com	Minor Frame	Ch #	Range
1	RPU Temperature	A16A	0, 160	384	-20 to 80° C
2	SPU Temperature	A16A	58, 218	442	-20 to 80° C
3	Converter Voltage +5V	A16A	91, 251	475	0, 5.565 V
4	Converter Voltage +12V	A16A	98, 258	482	0, 14 V
5	Converter Voltage -5.2 V	A16A	11, 171	395	1, 10.2 V
6	Converter Voltage -12V	A16A	122, 282	506	0, 14.3V
7	Converter Temperature	A16A	74, 234	458	0 to 80° C
8	USO Temperature	A16A	80, 240	464	-10 to 85° C
9	USO Thermal Regulation	A16A	50, 210	434	0 to 5.1 V

Figure 18.8-13. SARP-2 Analog Telemetry.

(1) RPU Temperature - Monitors RPU temperature from -10°C to +50°C.

(2) SPU Temperature - Monitors SPU temperature from -10°C to +50°C.

(3) Converter Voltage +5V - Monitors the +5V powerline voltage.

(4) Converter Voltage +12V - Monitors the +12V powerline voltage.

(5) Converter Voltage -5.2V - Monitors the -5.2V powerline voltage.

(6) Converter Voltage -12V - Monitors the -12V powerline voltage.

(7) Converter Temperature - Monitors the power converter temperature on the power transistor's radiator.

(8) USO Temperature - Monitors the USO temperature from 0°C to +100°C on the inside internal dewar flask near the quartz oscillator.

(9) USO Thermal Regulation Voltage - Monitors the USO regulation voltage which controls oven temperature.

18.8.5.2.2 Digital "B" Telemetry - The digital "B" one-bit status telemetry is available at the instrument interface at all times when the SARP-2 is ON. The 3.2-second subcom generated by the TIP samples each digital "B" telemetry point once every 3.2 seconds. Words 8 and 12 of the TIP Minor Frame are dedicated to the sampling of digital "B" telemetry from all spacecraft components..

The digital "B" telemetry points provided by the SARP-2 are as shown in Figure 18.8-14. The telemetry points shall be as follows:

Number	Telemetry Point Name	Logic State * (Note 1) "0"	"1"	Minor Frame	Ch. #
1	SARP Relay A Status	ON	OFF	2	258
2	SARP Relay B Status	ON	OFF	2	282
3	DRU 1 Status	ON	OFF	2	306
4	DRU 2 Status	ON	OFF	2	330
5	DRU 3 Status	ON	OFF	18	274
6	SARP Time Code (MSB)	-	-	8	264
7	Pseudo-message	ENABLE	DISABLE	5	333
8	Memory ON/OFF	ON	OFF	6	334
9	Read continuously	ON	OFF	22	326
10	Read single shot	ON	OFF	14	342
11	Read/erase single shot	ON	OFF	23	351
12	Receiver Bandwidth 1	ENABLE	DISABLE	18	298
13	Receiver Bandwidth 3	ENABLE	DISABLE	18	322
14	Receiver Bandwidth 3	ENABLE	DISABLE	18	346

* (Note 1) Logic "0" or "High Voltage" state (5 ± .7V) is "ON"; all Digital "B" telemetry reads logic "1" when the SARP/2 is OFF.

Figure 18.8-14. SARP-2 Digital "B" Telemetry.

- Telemetry points #1 through #5 and telemetry point #8 indicate the ON/OFF status of the instrument functions as shown in Figure 18.8-14.

- Telemetry point #6 change logic level each time the Time word (see Figure 18.8-15) reaches all "1's" and reinitializes at zero. The MSB changes every 44 hours, 29 minutes, and 48 seconds. This telemetry point normally, but not necessarily always, resets to logic "0" following instrument turn ON.

- Telemetry point #7 indicates the ENABLE/DISABLE status of the pseudo-message processing.

- Telemetry points #9, #10, and #11 indicate the most recent selection of Read mode; thus only one can be ON at any time. All three are OFF immediately following a memory ON (or OFF command), and subsequent transmission of any of the three Read commands causes the corresponding point to read ON and the other two points to read OFF. In the case of the Single Shot commands, the telemetry points continue to read ON, even though the reading activity has been completed, until another command is sent.

- Telemetry points #12 through #14 indicate the RPU bandwidth selected. The bandwidths are:

  a) Receiver Bandwidth 1 - 406.010-406.090 MHz
  b) Receiver Bandwidth 2 - 406.010-406.050 MHz
  c) Receiver Bandwidth 3 - 406.010-406.037 MHz

18.8.5.2.3 Digital "A" (Platform) Data - Data on the SARP-2 output line shall be biphase L, code Manchester at a data bit rate = Fuso/2160, = 2408.89 Hz. A bit "1" in the NRZ gives a 10V down to 0 transition in the biphase (in the middle of the bit period). A bit "0" gives a 0 to 10V

up transition. The output level on the digital data line when the SARP-2 is OFF and bus power is ON will be a logic "0" (+10V).

18.8.5.2.3.1 SARP-2 Data

(1) Data Format - Instrument output data is comprised of 24-bit words; words are organized into messages containing 8 words. Messages are either "short" or "long" as shown in Figures 18.8-15 and 18.8-16, respectively, depending on the total number of data bits to be transmitted or are in pseudo-message format as shown in Figure 18.8-17. All messages are serial output and begin with BIT 23 (24th bit) as the first bit.

(2) Frame Format - Instrument output data is additionally organized into frames comprised of 25 24-bit words (600 bits); a frame sync word followed by three complete 8 word messages. Note in Figure 18.8-15 that a short message contains a "0" (zero) word to complete the message. The frame format shall be as shown in Figure 18.8-18.

BIT	0	1	2	3	4	5	6	7	8	9	10	11	12	13	14	15	16	17	18	19	20	21	22	23
0	MESSAGE SYNC D60 (HEX)												PSEU DO	DRU No.		LONG SHORT	MR MSG	RT/ PB	RECEIVED LEVEL					
1	TIME (BINARY VALUE - 20 MILLISEC. PER BIT)																							P
2	24 DATA BITS																							
3	24 DATA BITS																							
4	24 DATA BITS																							
5	15 DATA BITS																							
6	MSB												DOPPLER										LSB	P
7	ZERO WORD																							

Figure 18.8-15. SARP-2 Message Format - Short Message.

BIT	0	1	2	3	4	5	6	7	8	9	10	11	12	13	14	15	16	17	18	19	20	21	22	23
0	MESSAGE SYNC D60 (HEX)												PSEU DO	DRU No.		LONG SHORT	MR MSG	RT/ PB	RECEIVED LEVEL					
1	TIME (BINARY VALUE - 20 MILLISEC. PER BIT)																							P
2	24 DATA BITS																							
3	24 DATA BITS																							
4	24 DATA BITS																							
5	24 DATA BITS																							
6	23 DATA BITS																							"0"
7	MSB												DOPPLER										LSB	P

Figure 18.8-16. SARP-2 Message Format - Long Message.

BIT	0	1	2	3	4	5	6	7	8	9	10	11	12	13	14	15	16	17	18	19	20	21	22	23
0	MESSAGE SYNC D60 (HEX)												1	DRU No.		0	MR MSG	RT/ PB	RECEIVED LEVEL					
1	TIME (BINARY VALUE - 20 MILLISEC. PER BIT)																							P
2	BYTE 00								BYTE 01								BYTE 02							
3	BYTE 03								BYTE 04								BYTE 05							
4	BYTE 06								BYTE 07								BYTE 08							
5	BYTE 09								BYTE 10								BYTE 11							
6	MSB								DOPPLER														LSB	P
7	DON'T CARE WORD																							
BYTE CONTENT	0 TO 09: 00001111 BYTE 10: 00001110 BYTE 11: 00000000																							

Figure 18.8-17. SARP-2 Message Format - Pseudo Message.

		WORD	24 BITS	
		1	42BB1F	
D60	Playback Message n	2	D60	MESSAGE
		3		
		4		
		5		
		6		
		7		
		8		
		9		
D60	Real Time Message Received during playback message n; output priority higher than for playback message	10		MESSAGE
		11		
		12		
		13		
		14		
		15		
		16		
		17		
D60	Playback Message n +1	18		MESSAGE
		19		
		20		
		21		
		22		
		23		
		24		
		25		
			42BB1F	

Figure 18.8-18. SARP-2 Frame Format.

(3) Memory Data - The instrument memory has a capacity or 393216 bits, or 2048 messages. The memory operates in a continuous "circular" last in first out (LIFO) read-out mode.

Whenever the memory is ON, incoming messages received into the memory unit are simultaneously transmitted directly (real-time messages) and stored in the memory for subsequent transmission (playback messages). Playback messages are always transmitted on a last in first out (LIFO) basis. When any of the playback (Read Memory) modes is active, there is continuous transmission of stored messages (LIFO), one immediately following another. Playback message transmission is interrupted if a new message becomes available for real-time transmission, but only upon completion of transmission of the current playback message. Refer to Figure 18.8-18 frame format. Following real-time transmission (and storage) of the new message, playback transmission resumes where it left off. If the memory is filled, the new message overwrites the oldest stored message.

If none of the playback modes are active and no messages are available for real-time transmission, filler or "zero" words are transmitted. The zero word consists of "0" for each of the first 23 bits and "1" for the 24th (000001 in hexadecimal).

If any one of the Read commands is received by the SARP-2 during the transmission of a message, transmission of that message is completed, and then the mode indicated by the Read command is implemented (with playback starting with the most recent message stored in the memory).

The order of priority in selection of the next message to be transmitted is as follows:

(a) Transmit frame sync word (42BB1F) if this is the first word of a frame.

(b) Transmit the most recent stored message if a Read command has been received but not implemented.

(c) Transmit a real-time message which has not been transmitted.

(d) Transmit the next most recent playback message.

(e) Transmit the most recent stored message if Read continuously mode is active and if the oldest playback message has just been transmitted. A zero word precedes resumption of playback. Transmit the first word of the next most recent playback message.

(f) Transmit the zero word (000001).

(4) SARP-2 Data Handling in Spacecraft - SARP-2 output is transmitted as continuous 2409 bps bi-phase data to the SARR where it is transmitted to the ground station as modulation of the SARR output.

18.8.5.2.3.2 Calibration Data - The SARP-2 contains no internal calibration circuits.

18.8.6 COMMANDS

18.8.6.1 SARR Commands

The spacecraft provides the command inputs listed below to the SARR. The SARR may not survive any sequence of commands in any combination and rate. Therefore, normal test sequences avoid switching of coaxial relay switches when the switch inputs are powered.

For "Level" commands, the "On", "True", or "Low" level output from the CXU is a logic "1" of zero-volt level. The "Off", "False", or "High" level output is a Logic "0" or +10-volt level for CMOS logic. The SARR requires 14 pulse discrete and 18 level discrete commands. All commands are implemented using the CIU and CXU. The duration of each pulse is 60 $\pm$ 5 milliseconds.

Further details on the functions of each command are given in Figure 18.8-19 and in the following paragraphs.

(1) SARR Level Control A Bit 0, Bit 1, Bit 2, Bit 3 and Bit 4 - These five level discretes together define the level of the data from the three "A" receivers and the SARP-2 data received by the "A" PTC. They operate together with Bits 5 and 6 which define the one of the four data sources to which Bits 0-4 apply, and with the "SARR Execute Level Control A" pulse discrete which commands the SARR to decode Bits 0-6 and assume the commanded state.

No.	Command Name	Type	Mneumonics	
1	SARR Level Control A Bit 0	Level	ON: SRA0N	OFF: SRA0F
	SARR Level Control A Bit 1	Level	ON: SRA1N	OFF: SRA1F
	SARR Level Control A Bit 2	Level	ON: SRA2N	OFF: SRA2F
	SARR Level Control A Bit 3	Level	ON: SRA3N	OFF: SRA3F
	SARR Level Control A Bit 4	Level	ON: SRA4N	OFF: SRA4F
2	SARR Bus A Destination Bit 5	Level	ON: SRA5N	OFF: SRA5F
	SARR Bus A Destination Bit 6	Level	ON: SRA6N	OFF: SRA6F
3	SARR Level Control B Bit 0	Level	ON: SRB0N	OFF: SRB0F
	SARR Level Control B Bit 1	Level	ON: SRB1N	OFF: SRB1F
	SARR Level Control B Bit 2	Level	ON: SRB2N	OFF: SRB2F
	SARR Level Control B Bit 3	Level	ON: SRB3N	OFF: SRB3F
	SARR Level Control B Bit 4	Level	ON: SRB4N	OFF: SRB4F
4	SARR Bus B Destination Bit 5	Level	SRB5	
	SARR Bus B Destination Bit 6	Level	SRB6	
5	SARR AGC Enable A	Level	SRAAE	
	SARR AGC Disable A	Level	SRAAD	
6	SARR AGC Enable B	Level	SRBAE	
	SARR AGC Disable B	Level	SRBAD	
7	SARR Tx A On - Tx B Off	Pulse	SRTXA	
8	SARR Tx B On - Tx A Off	Pulse	SRTXB	
9	SARR PTC A On - PTC B Off	Pulse	SRCVA	
10	SARR PTC B On - PTC A Off	Pulse	SRCVB	
11	SARR 121/243 A On - 121/243 B Off	Pulse	SR12A	
12	SARR 121/243 B On - 121/243 A Off	Pulse	SR12B	
13	SARR 406 A On - 406 B Off	Pulse	SR4RA	
14	SARR 406 B On - 406 A Off	Pulse	SR4RB	
15	SARR Execute Level Control A	Pulse	SREXA	
16	SARR Execute Level Control B	Pulse	SREXB	
17	SARR PTC A & Tx A Off	Pulse	SRAPF	
18	SARR PTC B & Tx B Off	Pulse	SRBPF	
19	SARR 406 A Off	Pulse	SRRAF	
20	SARR 406 B Off	Pulse	SRRBF	
23	SARR TXA Enable/Disable	Level	SRTAE	
24	SARR TXB Enable/Disable	Level	SRTBE	

Figure 18.8-19. SARR Command Interface.

The meaning of Bits 0-4 are different for the different data sources as follows:

(a) 121.5 MHz receiver and 243 MHz receiver - Bits 0-3 form a binary number defining attenuation in decibels. Bit 0 is the most significant bit (MSB) with weight 8 dB; Bit 3 is the least significant bit (LSB) with weight 1 dB. Bit 4 provides receiver baseband signal output cutoff capability; when Bit 4 equals 1, the receiver passes the signal with the attenuation defined by Bits 0-3; when Bit 4 equals 0, the receiver disconnects the signal from the transmitter.

(b) 406.05 MHz receiver - Bit 0-3 has the same meaning as in the 121.5 MHz and 243 MHz receivers. Bit 4 is meaningless.

(c) SARP-2 data - Bits 0 and 1 define the attenuation setting in the PTC according to the code below. Bits 2-4 are meaningless.

Bit 0	Bit 1	Attenuation, dB
0	0	0
0	1	10
1	0	5
1	1	15

The SARR does not respond to changes in these level discretes. Rather, it responds to their state at the time it receives the pulse discrete command, "SARR Execute Level Control A".

(2) SARR Bus A Destination Bit 5 and Bit 6 - These two level discretes together define the destination of the level control commands defined by Bits 0-4 and the destination of the AGC disable commands as shown below.

Bit 5	Bit 6	Destination
0	0	121.5 MHz "A" receiver
0	1	243 MHz "A" receiver
1	0	406.05 MHz "A" receiver
1	1	SARP-2 data attenuators in the "A" PTC

The SARR does not respond to changes in these level discretes. Rather, it responds to their state at the time it receives the pulse discrete command, "SARR Execute Level Control A".

(3) SARR Level Control B Bit 0, Bit 1, Bit 2, Bit 3, and Bit 4 - The description in (1) above applies, substituting "B" for "A".

(4) SARR Bus B Destination Bit 5 and Bit 6 - The description in (2) above applies, substituting "B" for "A".

(5) SARR AGC Disable/Enable A - The "0" state of this level discrete selects the fixed gain mode for the receiver designated by Bus A Destination Bits 5 and 6. The "1" state selects AGC mode for that receiver. The SARR ignores the state of this discrete if Bus A Destination Bits 5 and 6 are both "1". The SARR does not respond to changes in this level discrete. Rather, it responds to the state of the discrete at the time the SARR receives the pulse discrete command, "SARR Execute Level Control A".

(6) SARR AGC Disable/Enable B - The description in (5) above applies, substituting "B" for "A".

(7) SARR Tx A ON - Tx B OFF - This command causes the SARR to connect the +28 Volt Main Bus to the power input of the "A" transmitter and connects the RF output of that transmitter to the SLA. This command also causes the SARR to disconnect the +28 Volt Main Bus from the power input of the "B" transmitter. This command has no effect on the DC/DC converter residing in either PTC, and has no effect on any receiver.

(8) SARR Tx B ON - TX A OFF - The description in (7) above applies, substituting "B" for "A".

(9) SARR PTC A ON - PTC B OFF - This command causes the SARR to connect the +28 Volt Main Bus to the power input of the DC/DC converter residing in the "A" PTC and to disconnect the +28 Volt Main Bus from the power input to the DC/DC converter residing in the "B" PTC. This command has no effect on the power status of either transmitter or on the state of any RF switch. The result of this command is to make secondary power available to the power inputs of the "A" receivers. However, other commands defined below determine whether or not those power inputs connect to the output of the DC/DC converter.

(10) SARR PTC B ON - PTC A OFF - The description in (9) above applies, substituting "B" for "A".

(11) SARR 121/243 A ON - 121/243 B OFF - This command causes the SARR to connect the power input to the "A" 121/243 MHz receivers to the power output from the DC/DC converter residing in the "A" PTC. It also causes the SARR to connect the RF input to the "A" 121.5 MHz receiver to the SARR 121.5 MHz bandpass filter and thence to RFF-5 and the 121.5 MHz port of the SRA; it causes the SARR to connect the RF input to the "A" 243 receiver to the SARR 243 MHz bandpass filter and thence to RFF-4 and the 243 MHz port of the SRA. The SARR disconnects the power input to the "B" 121/243 MHz receivers from the power output from the DC/DC converter residing in the "B" PTC. It disconnects the RF inputs of the "B" 121.5 MHz and 243 MHz receivers from the RF paths defined above. This command has no effect on the power ON/OFF status of the DC/DC converter residing in either PTC. It has no effect on the power status or RF connection of either transmitter.

This command also connects the +28V oven power to the "A" 121/243 MHz receiver and disconnects the +28V oven power from the "B" 121/243 MHz receiver.

(12) SARR 121/243 B ON - 121/243 A OFF - The description in (11) above applies, substituting "B" for "A".

(13) SARR 406 A ON - 406 B OFF - This command causes the SARR to connect the power input to the "A" 406.05 MHz receiver to the power output from the DC/DC converter residing in the "A" PTC. It also causes the SARR to connect the RF input to the "A" 406.05 MHz receiver to the SARR 406.05 MHz bandpass filter and thence to RFF-3 and the 406.05 MHz port of the SRA.

The SARR disconnects the power input to the "B" 406.05 MHz receiver from the power output from the DC/DC converter residing in the "B" PTC. It disconnects the RF input of the "B" 406.05 MHz receiver from the RF path defined above. This command has no effect on the power ON/OFF status of the DC/DC converter residing in either PTC. It has no effect on the power status or RF connection of either transmitter.

(14) SARR 406 B ON - 406 A OFF - The description in (13) above applies, substituting "B" for "A".

(15) SARR Execute Level Control A - This pulse discrete causes the SARR to execute the commands defined by the current state of all the "A" side level discretes, including level setting and AGC enable/disable. The SARR executes this command independent of its mode status, so long as the +28 Volt Main Bus and the +10 Volt Interface Bus are present. Execution takes the form of driving a set

of latching relays in the PTC and the selected receiver. This command has no effect on the "B" PTC or any "B" receiver. It has no effect on the power ON/OFF status of RF signal routing of any unit.

(16) SARR Execute Level Control B - The description in (15) above applies substituting "B" for "A".

(17) SARR PTC A and Tx A OFF - This command causes the SARR to disconnect the power input to the DC/DC converter residing in the "A" PTC and the "A" transmitter from the +28 Volt Main Bus. It has no effect on any "B" unit or RF signal routing of any unit. It has no effect on the connections between the power output of either DC/DC converter and the power input to any receiver.

(18) SARR PTC B and Tx B OFF - The description in (17) above applies, substituting "B" for "A".

(19) SARR 406 A OFF - This command causes the SARR to disconnect the power input to the "A" 406.05 MHz receiver from the power output from the DC/DC converter residing in the "A" PTC. This command has no effect on the ON/OFF power status of any other unit. It has no effect on the RF signal routing of any unit.

(20) SARR 406 B OFF - The description in (19) above applies, substituting "B" for "A".

(21) SARR Modes - The SARR command structure prevents all redundant units in the SARR from being powered at once. The command structure assures that at most one member of each redundant pair of units is powered.

The command and signal routing structure allows cross-strapping of the "A" receivers with the "B" transmitter and the "B" receivers with the "A" transmitter. It disallows a mixed set of receivers from "A" and "B". It disallows cross-strapping of the SARP-2 data. It allows any of the three following units to be powered ON or OFF independent of the power ON/OFF status of the other two:

- Either transmitter
- Either 406.05 MHz receiver
- The unit comprising the 121.5 MHz receiver and the 243 MHz receiver with the same letter designation as the 406.05 MHz receiver above.

Figure 18.8-20 lists all the ON/OFF power modes of all SARR units, the commands necessary to achieve the modes, and the effects those commands have on other units.

(22) SARR Commands when the Spacecraft Enters Safe-State Mode - When the spacecraft Command and Control subsystem senses certain anomalous conditions, it issues a set of commands to the other spacecraft subsystems. The composite mode status that results from those commands is defined as Safe-State Mode. Safe-State Mode in general includes commanding spacecraft mechanical assemblies and latching relays to predetermined states, and then commanding most spacecraft components into low-power or OFF modes. The commands to SARR associated with entering Safe-State Mode will be as follows:

- All SARR level discrete commands as defined in (1) through (6), (23), and (24) are set to "0".

Unit	Mode	Command (s)	Effect of Commands on
TX A	On & output connect to SLA	Tx A Enable Tx A On – Tx B Off	Turns off Tx B & disconnects Tx B output from SLA; no effect on any receivers or DC/DC converters
	Off	PTC A and Tx A off	Turns off power from all "A" units; no effect on any RF switches
	Off & output disconnected from SLA	Tx B Enable Tx B On - Tx A Off	No effect on either DC/DC converter or any receivers, powers "B" transmitters
Tx B	All above descriptions apply - interchanging A & B		
121/ 243 Rx A	On & inputs connected to SRA	Conv A On – Conv B Off; 121/243 Rx A On – 121-243 Rx B Off	Unpowers "B" DC/DC converter and all "B" receivers; no effect on either transmitter
	Power Off	Conv B On – Conv A Off	Unpowers all "A" receivers; powers "B" converter; no effect on any RF switches or either transmitter
	Power Off	PTC A and Tx A Off	Disconnects power from all "A" units: no effect on any RF switches
	Power Off & inputs disconnected from SRA	121/243 Rx B On - 121/243 RX A Off	Connects power input to "B" 121/243 MHz receivers to power output from "B" DC/DC converter; connects SRA to RF inputs to "B" 121/243 MHz receiver; no effect on either transmitter
121/ 243 Rx B	All above descriptions apply - interchanging A & B		
406 Rx A	On & input connected to SRA	Conv A On – Conv B Off; 406 A On – 406 B Off	Unpowers "B" DC/DC converter and all "B" receivers; no effect on either transmitter
406 Rx A	Power Off	Conv B On – Conv A Off	Unpowers all "A" receivers; powers "B" DC/DC converter; no effect on any RF switches of either transmitter
	Power Off	PTC A and Tx A Off	Turns off power from all "A" units; no effect on any RF switches
	Power Off	406 A Off	No effect on any other unit
	Power Off & input disconnected from SRA	406 B On – 406 A Off	Connects power input to "B" 406 MHz receiver to power output from "B" DC/DC converter; connnects SRA RF inputs to "B" 406 MHz receiver; no effect on either transmitter
406 Rx B	All above descriptions apply – interchanging A & B		
PTC A	dc/dc converter On	Conv A On – Conv B Off	Unpowers "B" DC/DC converter and all "B" receivers; no effect on any RF switches or transmitters

Figure 18.8-20. SARR ON/OFF Power Modes.

Unit	Mode	Command (s)	Effect of Commands on
PTC A (cont.)	DC/DC converter Off	Conv B On – Conv A Off	Unpowers all "A" receivers; powers "B" DC/DC converter; no effect on any RF switches either transmitter
	DC/DC converter Off	PTC A and Tx A Off	Unpowers all "A" units; no effect on any RF swtiches
PTC B	All above apply - interchanging A & B		

Figure 18.8-20. SARR ON/OFF Power Modes (Continued).

- Two pulse discrete commands are sent - "SARR PTC A and Tx A OFF" and "SARR PTC B and Tx B OFF", as defined in (17) and (18).

- No other pulse discrete commands are sent to SARR as part of entering Safe-State Mode. Therefore, SARR is an exception to the general practice of commanding latching relays into predetermined states. None of the SARR level attenuators, RF switches, or secondary power routing switches are commanded as part of entering Safe-State Mode.

(23) SARR TX A Enable/Disable - The "0" state of this level discrete (+10V) allows the A-side transmitter to commanded "ON". The "1" state (0V) inhibits the "ON" command or cause the A-side transmitter to turn "OFF" when powered.

(24) SARR TX B Enable/Disable - The description in (23) above applies, substituting "B" for "A".

18.8.6.1.1 Safe State Definition - The SARR Safe State mode is defined as shown in Figure 18.8-21. Section 18.8.6.1 - (22) gives a description of the SARR entering Safe State mode.

Unit Status Commanded by STESM	
SARR LCA BIT 0 OFF	X
SARR LCA BIT 1 OFF	X
SARR LCA BIT 2 OFF	X
SARR LCA BIT 3 OFF	X
SARR LCA BIT 4 OFF	X
SARR LCA BIT 5 OFF	X
SARR LCA BIT 6 OFF	X
SARR LCB BIT 0 OFF	X
SARR LCB BIT 1 OFF	X
SARR LCB BIT 2 OFF	X
SARR LCB BIT 3 OFF	X
SARR LCB BIT 4 OFF	X
SARR LCB BIT 5 OFF	X
SARR LCB BIT 6 OFF	X
SARR AGC A DISABLE	X
SARR AGC B DISABLE	X
SARR PTC A AND TX A OFF	X
SARR PTC B AND TX B OFF	X
SARR 406 A OFF	X
SARR 406 B OFF	X

Figure 18.8-21. SARR & SARP-2 Safe-State Definition.

Unit Status Commanded by STESM	
SARP DATA RECOVERY UNIT 1 OFF	X
SARP DATA RECOVERY UNIT 2 OFF	X
SARP DATA RECOVERY UNIT 3 OFF	X
SARP-2 PSEUDO MSG 1 OFF	X
SARP-2 PSEUDO MSG 2 OFF	X
Level command is sent to the state shown, but since the execute commands (SREXA and SREXB) are not issued, the instrument is unaffected.	

Figure 18.8-21. SARR & SARP-2
Safe-State Definition (Continued).

18.8.6.1.2 Power Down Mnemonic Sequence

18.8.6.1.2.1 Normal Power Down

To power down the PT&C A and B, and the A and B transmitters (4 second delay), send the following commands.

- [SRAPF]
- [SRBPF]

18.8.6.1.2.2 Emergency Power Down - This section is TBD.

18.8.6.1.3 Power Up Mnemonic Sequence

18.8.6.1.3.1 Routine Power Up

The following discusses the PROCS commands which can be sent to the SARR individually.

"SRHCATA": To power-up side A (4 second delay).
[SRBPF], [SRTAE], [SRTXA], [SRCVA], [SR12A], [SR4RA]

"SRHCBTB" : To power-up side B (4 second delay).
[SRAPF], [SRTBE], [SRTXB], [SRCVB], [SR12B], [SR4RB]

"SRHCATB" : To power-up side A receivers and side B transmitter (4 second delay).
[SRAPF], [SRTBE], [SRTXB], [SRCVA], [SR12A], [SR4RA]

"SRHCBTA" : To power-up side B receivers and side A transmitter (4 second delay).
[SRBPF], [SRTAE], [SRTXA], [SRCVB], [SR12B], [SR4RB]

18.8.6.1.3.2 . Power Up from Safe State - To power up from Safe State, use the foolowing sequences.

- [SDU3N] DRU #3 ON
- [SDU2N] DRU #2 ON
- [SDU1N] DRU #1 ON

18.8.6.1.4 Other Command Sequences

The following are PROCS commands which can be sent individually.

"SARA121E" : To enable the A side 121.5 receiver AGC and set the attenuators to 5 dB (1 second delay).
[SRA5F], [SRA6F], [SRA0F], [SRA1N], [SRA2F]
[SRA3N], [SRA4N], [SRAAE], [SREXA]

"SARA121D" : To disable the A side 121.5 receiver AGC and set the attenuators to 5 dB (1 second delay).
[SRA5F], [SRA6F], [SRA0F], [SRA1N], [SRA2F]
[SRA3N], [SRA4N], [SRAAD], [SREXA]

"DISC121A" : To disconnect the A side 121.5 receiver from the transmitter (1 second delay).
[SRA5F], [SRA6F], [SRA4F], [SREXA]

"SARA243E" : To enable the A side 243 receiver AGC and set the attenuators to 5 dB (1 second delay).
[SRA5F], [SRA6N], [SRA0F], [SRA1N], [SRA2F],
[SRA3N], [SRA4N], [SRAAE], [SREXA]

"SARA243D" : To disable the A side 243 receiver AGC and set the attenuators to 5 dB (1 second delay).
[SRA5F], [SRA6N], [SRA0F], [SRA1N], [SRA2F],
[SRA3N], [SRA4N], [SRAAD], [SREXA]

"DISC243A" : To disconnect the A side 243 receiver from the transmitter.
[SRA5F], [SRA6N], [SRA4F], [SREXA]

"SARA406E" : To enable the A side 406 receiver AGC and set the attenuators to 10 dB (1 second delay).
[SRA5N], [SRA6F], [SRA0N], [SRA1F],
[SRA2N], [SRA3F], [SRAAE], [SREXA]

"SARA406D" : To disable the A side 406 receiver AGC and set the attenuators to 10 dB (1 second delay).
[SRA5N], [SRA6F], [SRA0N], [SRA1F],
[SRA2N], [SRA3F], [SRAAD], [SREXA]

"DISC406A" : To disconnect the A side 406 receiver from the transmitter.
[SR4RA]

"CONN406A" : To connect the A side 406 receiver to the transmitter.
[SRRAF]

"SARB121E" : To enable the B side 121.5 receiver AGC and set the attenuators to 5 dB (1 second delay).
[SRB5F], [SRB6F], [SRB0F], [SRB1N], [SRB2F],
[SRB3N], [SRB4N], [SRBAE], [SREXB]

"SARB121D" : To disable the B side 121.5 receiver AGC and set the attenuators to 5 dB (1 second delay).
[SRB5F], [SRB6F], [SRB0F], [SRB1N], [SRB2F], [SRB3N], [SRB4N], [SRBAD], [SREXB]

"DISC121B" : To disconnect the B side 121.5 receiver from the transmitter (1 second delay).
[SRB5F], [SRB6F], [SRB4F], [SREXB]

"SARB243E" : To enable the B side 243 receiver AGC and set the attenuators to 5 dB (1 second delay).
[SRB5F], [SRB6N], [SRB0F], [SRB1N], [SRB2F], [SRB3N], [SRB4N], [SRBAE], [SREXB]

"SARB243D" : To disable the B side 243 receiver AGC and set the attenuators to 5 dB (1 second delay).
[SRB5F], [SRB6N], [SRB0F], [SRB1N], [SRB2F], [SRB3N], [SRB4N], [SRBAD], [SREXB]

"DISC243B" : To disconnect the B side 243 receiver from the transmitter (1 second delay).
[SRB5F], [SRB6N], [SRB4F], [SREXB]

"SARB406E" : To enable the B side 406 receiver AGC and set the attenuators to 10 dB (1 second delay).
[SRB5N], [SRB6F], [SRB0N], [SRB1F], [SRB2N], [SRB3F], [SRBAE], [SREXB]

"SARB406D" : To disable the B side 406 receiver AGC and set the attenuators to 10 dB (1 second delay).
[SRB5N], [SRB6F], [SRB0N], [SRB1F], [SRB2N], [SRB3F], [SRBAD], [SREXB]

"DISC406B" : To disconnect the B side 406 receiver from the transmitter.
[SRRBF]

"CONN406B" : To connect the B side 406 receiver to the transmitter.
[SR4RB]

"PCMA0DB" : To set the A side PDS channel attenuators to 0 dB (1 second delay).
[SRA5N], [SRA6N], [SRA0F], [SRA1F], [SREXA]

"PCMA10DB" : To set the A side PDS channel attenuators to 0 dB (1 second delay).
[SRA5N], [SRA6N], [SRA0F], [SRA1N], [SREXA]

"PCMB0DB" : To set the B side PDS channel attenuators to 0 dB (1 second delay).
[SRB5N], [SRB6N], [SRB0F], [SRB1F], [SREXB]

"PCM10DB" : To set the B side PDS channel attenuators to 10 dB (1second delay).
[SRB5N], [SRB6N], [SRB0F], [SRB1N], [SREXB]

"PCMHA05" : To set the A side PDS channel attenuators to 5 dB (1 second delay).
[SRA5N], [SRA6N], [SRA0N], [SRA1F], [SREXA]

"PCMHA15" : To set the A side PDS channel attenuators to 15 dB (1second delay). [SRA5N], [SRA6N], [SRA0N], [SRA1N], [SREXA]

"PCMHB05" : To set the B side PDS channel attenuators to 5 dB (1 second delay). [SRB5N], [SRB6N], [SRB0N], [SRB1F], [SREXB]

"PCMHB15" : To set the B side PDS channel attenuators to 15 dB (1 second delay). [SRB5N], [SRB6N], [SRB0N], [SRB1N], [SREXB]

"SRHLCATA" : To power-up the A side converter and receivers and A side transmitter, and set attenuators to 5 dB (121.5 and 243 Receivers, and PDS channel) and 10 dB (406 Rcvr channel) (4 second delay). "SRHCARA", "SARA121E", "SARA243E", "SARA406E", "PCMHA05"

"SRHLCBTB" : To power-up the B side converter and receivers and B side transmitter, and set attenuators to 5 dB (121.5 and 243 Receivers, and PDS channel) and 10 dB (406 Rcvr channel) (4 second delay). "SRHCBTB", "SARB121E", "SARB243E", "SARB406E", "PCMHB05"

"SRHLCATB" : To power-up the A side converter and receivers and B side transmitter, and set attenuators to 5 dB (121.5 and 243 Receivers, and PDS channel) and 10 dB (406 Rcvr channel) (4 second delay). "SRHCATB", "SARA121E", "SARA243E", "SARA406E", "PCMHA05"

"SRHLCBTA" : To power-up the B side converter and receivers and A side transmitter, and set attenuators to 5 dB (121.5 and 243 Receivers, and PDS channel) and 10 dB (406 Rcvr channel) (4 second delay). "SRHCBTA", "SARB121E", "SARB243E", "SARB406E", "PCMHB05"

18.8.6.2 Input Messages & Commands

18.8.6.2.1 Input Messages

The SARP-2 receives input messages from ELT/EPIRB through the spacecraft. The SARP-2 input message format is shown in Figure 18.8-22. Either of the two formats for a long or short message can be utilized by an ELT/EPIRB for transmission to the spacecraft for location and identification of an emergency event.

18.8.6.2.2 Command Description

The SARP-2 instrument interfaces with the spacecraft CXU for command purposes. The CXU provides pulse discrete commands for all SARP-2 commands.

The SARP-2 is comprised of a RPU and a SPU. When the DC/DC converter and one or more DRUs are ON, the SARP-2 processes received messages in real-time. With the addition of the Memory being ON, the SARP-2 continues real-time processing of messages and also stores the messages in memory. The commands utilized by SARP-2 are as detailed in Figure 18.8-23.

18.8.6.2.3 Safe-State Definition

The SARP-2 Safe State mode is defined as shown in Figure 18.8-21. To place the SARP-2 in standby mode, use the following procedure:

- [SDU1F] DRU #1 OFF
- [SDU2F] DRU #2 OFF
- [SDU3F] DRU #3 OFF
- *VERIFY DRUs OFF BEFORE RESUME*
- [SPMF1] PSEUDO - MESSAGE OFF

To return to normal mode, use the following procedure:

- [SDU3N] DRU #3 ON
- [SDU2N] DRU #2 ON
- [SDU1N] DRU #1 ON

18.8.6.2.4 Power Down Mnemonic Sequence

18.8.6.2.4.1 Normal Power Down

The following sequence should be followed for normal power down procedures of the SARP-2.

- [SDU3F] DRU #3 OFF
- [SDU2F] DRU #2 OFF
- [SDU1F] DRU #1 OFF
- *VERIFY DRUs OFF BEFORE RESUME*
- [SRPAF] SARP RELAY A OFF
- [SRPBF] SARP RELAY B OFF

18.8.6.2.4.2 Emergency Power Down

In an emergency, ground operation can use an emergency power turn off for SARP-2 using the following procedure.

- [SRPAF] SARP RELAY A OFF
- [SRPBF] SARP RELAY B OFF
- [SDU1F] DRU #1 OFF
- [SDU2F] DRU #2 OFF

- [SDU3F] DRU #3 OFF

18.8.6.2.4.3 Power Down from Safe State

Once in Safe State, the instrument is already in the power down mode.

UNMODULATED CARRIER	BIT SYNC (1)	FRAME SYNC(2)	FORMAT FLAG (3)	
160 MS	15	9	0	87 BITS OF DATA

406 MESSAGE FORMAT (SHORT MESSAGE)

UNMODULATED CARRIER	BIT SYNC (1)	FRAME SYNC(2)	FORMAT FLAG (3)	
160 MS	15	9	1	119 BITS OF DATA

406 MESSAGE FORMAT (LONG MESSAGE)

Notes:
1) BIT SYNC - 15 "1" BITS
2) FRAME SYNC - 000101111
3) "1" BIT INDICATES LONG MESSAGE FORMAT
"0" BIT INDICATES SHORT MESSAGE FORMAT

Figure 18.8-22. SARP-2 Input Message Formats.

No.	Command Name	Mnemonics	CXU Buffer / Bit	Command Descriptions
1	SARP ON-A	SRPAN	33/1	Turns DC/DC converter "ON" via Relay A and, if Relay B is off, resets PSEUDO-MESSAGE to OFF and RECEIVER BANDWIDTH to 1.
2	SARP OFF-A	SRPAF	33/2	Turns DC/DC converter "OFF" via Relay A if Relay B is in "OFF" position.
3	SARP ON-B	SRPBN	35/1	Turns DC/DC converter "ON" (redundant) via Relay B.
4	SARP OFF-B	SRPBF	35/2	Turns DC/DC converter "OFF" via Relay B if Relay A is off and, if Relay A is off, resets PSEUDO-MESSAGE to OFF and RECEIVER BANDWIDTH to 1.
5	DRU1 ON	SDU1N	33/3	Powers DRU1 if Relay A or B is on.
6	DRU1 OFF	SDU1F	33/4	Removes power from DRU1
7	DRU2 ON	SDU2N	35/3	Powers DRU2 if Relay A or B is on.
8	DRU2 OFF	SDU2F	35/4	Removes power from DRU2.
9	DRU3 ON	SDU3N	33/5	Powers DRU3 if relay A or B is on.
10	DRU3 OFF	SDU3F	33/6	Removes power from DRU3.
11	Read Memory Continuous	SPMRC	35/7	If Relay A or B is ON and Memory is ON, causes messages stored in the memory to be read and transmitted, LIFO, starting with the latest message and ending with the oldest message, and to repeat this process continously until another Memory command is received. Transmission of playback (stored) messages is interrupted (as the end of the mesage) when a new message is received, and resumed when the new message has been transmitted. If the memory is filled and new messages are received during the playback, the last message received is stored as the latest (most recent) message in memory. Memory content is not affected by reading in this mode. Also rests the status of the other read modes to OFF.
12	Read Memory Single	SPMSS	37/5	Exactly the same as Read Memory Continously, except that playback is terminated at the end of one cycle.
13	Read/Erase Memory	SPMRE	37/4	Exactly the same as Read Memory Single Shot, except that the content of the memory is erased (replaced by zero words) by the reading.
14	Memory OFF	SRPMF	35/6	Removes power from memory and resets status of all read modes to OFF.
15	Memory ON	SRPMN	35/5	If Relay A or B is on, powers memory and activates Write mode. With Write mode activated, when a message is received, it is simultaneously transmitted and stored in the memory, except that these actions are delayed until transmission of any partially transmitted message is complete. If the memory is already filled, the new message overwrites the oldest message in the memory. Also resets the status of all Read modes to OFF. Memory may be either ON or OFF at turn-on of the instrument (SARP-2 ON-A or SARP-2 ON-B)
16	Pseudo-message ON	SPPMN	33/7	This command enables CONTROL-UNIT generation of pseudo-messages which identify interfering signals. A maximum of two Data Recovery Units generate the pseudo-messages; pseudo messages shall be generated at 20.9 ± 0.5 second intervals by each Data Recovery Unit.
17	Pseudo-message OFF 1	SPMF1	33/8	This command disables the generation of pseudo-messages by the Data Recovery Units.

Figure 18.8-23. SARP-2 Operational Commands.

No.	Command Name	Mnemonics	CXU Buffer / Bit	Command Descriptions
18	Pseudo-message OFF 2	SPMF2	35/8	Same as command 17. This command is a redundant (back-up) command to ensure that pseudo-message generation can be disabled in the event of a failure in the Command 17 electronics.
19	Receiver Bandwidth 1*	SPBW1	37/6	Selects receiver wide bandwidth, 406.010 to 406.090 MHz. Wide bandwidth selected at instrument turn-on.
20	Receiver Bandwidth 2*	SPBW2	37/7	Selects receiver intermediate bandwidth, 406.010 to 406.050 MHz.
21	Receiver Bandwidth 3*	SPBW3	37/8	Selects receiver Narrow bandwidth, 406.010 to 406.037 MHz.
*1 = Wide *2 = Intermediate *3 = Narrow				

Figure 18.8-23. SARP-2 Operational Commands (Continued).

18.8.6.2.5 Power Up Mnemonic Sequence

18.8.6.2.5.1 Routine Power Up

The following procedure should be used to perform normal turn on for the SARP-2.

- [SRPAN] SARP RELAY A ON
- [SRPMN] SARP MEMORY ON
- [SPMRC] SARP CONTINUOUS READING
- [SDU3N] DRU #3 ON
- [SDU2N] DRU #2 ON
- [SDU1N] DRU #1 ON
- *VERIFY DRUs ON BEFORE RESUME*
- [SRPBN] SARP RELAY B ON

18.8.6.2.5.2 Power Up from Safe State

To power-up from safe state, the following procedure should be utilized.

- [SDU3N] DRU #3 ON
- [SDU2N] DRU #2 ON
- [SDU1N] DRU #1 ON

18.8.6.2.5.3 Emergency Power Up

If ground operations require an emergency power on operation for SARP-2, the following procedure should be followed.

- [SRPAN] SARP RELAY A ON
- [SRPMN] SARP MEMORY ON
- [SPMRC] SARP CONTINUOUS READING
- [SDU3N] DRU #3 ON
- [SDU2N] DRU #2 ON
- [SDU1N] DRU #1 ON
- *VERIFY DRUs ON BEFORE RESUME*
- [SRPBN] SARP RELAY B ON

18.8.7 MIRP PROCESSING

The SARR and SARP-2 do not use the spacecraft MIRP.

18.8.8 POWER INPUT AND PROFILE

18.8.8.1 SARR Power

The steady-state total power consumption by the SARR does not exceed 47 watts.

18.8.8.1.1 Power Sources

(1) Power required by the SARR is taken from the +28 Volt Main Bus, except as listed below.

(2) The +28 Volt Analog Temperature Telemetry Bus supplies power for all the SARR temperature telemetry sensors.

(3) The +10 Volt Interface Bus powers all command interfaces and all data interfaces with the SARP-2.

(4) The SARR survives the temporary interruption of any or of all its power sources caused by spacecraft failure. The interruption may have any duration.

18.8.8.1.2 +28 Volt Main Bus Power Consumption

(1) The steady-state power required by the instrument from the +28 Volt Main Bus does exceed 46.8 watts when ON, and 0.35 watts when OFF.

(2) Except for CRYSTAL oven warm-up variation, the instrument exhibits no power-profile variation, i.e., no uncommanded variation of power demand other than that caused by changes in environment and by age.

(3) The instrument requires no heater power from the +28 Volt Main Bus except for the CRYSTAL ovens.

18.8.8.2 SARP-2 Power

18.8.8.2.1 Power Sources

(1) The main power required by the SARP-2 is taken from the +28 Volt Main Bus.

(2) The +28 Volt Analog Telemetry Bus is used to power the analog temperature telemetry circuits.

(3) All spacecraft/instrument interfaces are powered by the +10 Volt Interface Bus.

18.8.8.2.2 +28 Volt Main Bus Power Consumption

(1) Orbit average power required by the instrument from the +28 Volt Main Bus for the specified operating modes is as shown in Figure 18.8-24.

(2) There is no heater power required by the instrument from the +28 Volt Main Bus.

Unit	Typical (Vacuum Operation)				
	Standby Turn-ON	Standby	1 DRU	2 DRUs	3 DRUs
Total*	21 W	15.73	17.12	18.51 W	19.9 W
*0.5 Watt additional for USO in ambient pressure except for turn on.					

Figure 18.8-24. SARP-2 Power Dissipation.

18.8.9 ACTIVATION AND EVALUATION (A&E) PROCEDURES AND TIMELINE

18.8.9.1 SARR Activation

The SARR is commanded "OFF" before launch. It remains so for at least two hours after arrival in operational orbit. The SARR activation sequence has not been identified at this time.

18.8.9.2 SARP-2 Activation

The SARP-2 activation sequence has not been identified at this time.

18.8.10 OPERATIONAL MODES

Following their respective activation sequences, the SARR and SARP-2 are in their operational modes. The SARR and SARP-2 are fully power ON at this time.

18.8.11 CALIBRATION REQUIREMENTS

The SARR and SARP-2 have no on-orbit calibration requirements.

18.8.12 ROUTINE COMMAND REQUIREMENTS

Command requirements of the SARR and SARP-2 are shown in Sections 18.8.6.1 and 18.8.6.2 of this document, respectively.

18.8.13 EVALUATION OF NOMINAL PERFORMANCE AND TREND REQUIREMENTS

On-orbit temperature and voltage ranges of analog telemetry points within the SARP-2 are shown in Figure 18.8-13.

18.8.14 CONSTRAINTS

18.8.14.1 SARR Constraints

The SARR is command "OFF" before launch, and remains powered "OFF" for at least 2 hours after arrival in operational orbit.

18.8.14.2 SARP-2 Constraints

Prior to power "ON", the SARP-2 temperature must be between -5°C and 45°C. A 120 minute warm-up period is required before valid telemetry data is obtainable.

18.9 SOLAR BACKSCATTER ULTRAVIOLET SPECTRAL RADIOMETER (SBUV/2)

18.9 SOLAR BACKSCATTER ULTRAVIOLET SPECTRAL RADIOMETER (SBUV/2)

18.9.1 FUNCTIONAL DESCRIPTION

18.9.1.1 Purpose of the SBUV Instrument

The purpose of the SBUV instrument is to measure the Solar irradiance and Earth radiance in the near ultraviolet spectrum. From these data, the following atmospheric properties can be deduced:

1. The global and vertical distribution of stratospheric ozone
2. The structure and dynamics of stratospheric ozone
3. Photochemical processes and the influence of "trace" constituents on the ozone layer.
4. Long-term Solar activity in the Ultraviolet spectrum.

Usable data can only be collected by the SBUV when it is integrated onto a "PM" spacecraft due to solar angle requirements.

18.9.1.2 Instrument Description

Two optical radiometers form the heart of the SBUV instrument: a monochrometer and a small but very important "Cloud Cover Radiometer" (CCR). The instrument contains four mechanisms: a movable grating for wavelength selection in the monochrometer, a deployable diffuser which selects Solar or Earth radiation measurements, a deployable Mercury lamp for wavelength calibration and an optical chopper mechanism which converts the steady incoming radiation to pulses of UV light which can be readily processed by the SBUV detectors and electronics.

The optical detectors consist of a photo multiplier tube (PMT) in the monochrometer and a vacuum photo diode (VPD) in the CCR. The PMT operates from a high voltage supply of about -700 volts DC; the VPD in the CCR operates from a bias of about -10 volts derived from the instruments low voltage power supply (LVPS).

18.9.2 SYSTEM DESCRIPTION

The SBUV/2 is a Nadir pointing nonspatial scanning instrument sensitive to radiation in the 160 nm to 400 nm ultraviolet spectrum. The overall radiometric resolution is approximately 1 nm in this spectral band.

The SBUV instrument optical hardware and main electronics are carried in two modules. The Sensor Module (SM) contains the optical elements and detectors while the Electronics Module (ELM) houses the main electronics and power supplies.

The use of a deployable diffuser in the SM gives the instrument the versatility of selecting between Solar and Earth measurements. With the diffuser "Stowed", the instrument views the Earth directly. The data from this configuration corresponds to Earth radiance. With the diffuser deployed into the "Sun" position, the detector output measurements correspond to Solar irradiation data. Ground and in flight calibration data are used to convert the detector data and diffuser mode data to Solar irradiation or Earth Radiance units.

The SM houses the monochrometer optical hardware (see Figure 18.9-1) which uses a movable grating to select the Wavelength where measurements will be made. The grating mechanism can be commanded to any one of 8,192 positions giving the monochrometer approximately .1 nm wavelength resolution. Commands which correspond to grating positions come from a Read Only Memory (ROM). Data read from the ROM correspond to 12 discrete wavelength positions in the "DISCRETE" mode. In the "SWEEP" mode, the ROM data is simply a grating position corresponding to the wavelength where the sweep will start.

The PMT has a very large dynamic range (greater than 120db). This range is transmitted in 3 ranges requiring a total of .75 seconds for stepping and settling of the grating to a new position and 1.25 seconds of integration time before transmission, when the instrument is in this "Discrete" grating mode.

In the "Sweep" mode, the grating is stepped every 50 ms and the PMT signal is integrated (while the stepping continues) for 100 ms before transmission (see Figure 18.9-10 for "Sweep" mode telemetry format).

The CCR has a fixed 379 nm filter for wavelength selection and is co-aligned to the monochrometer; therefore, it views the same scene as the monochrometer. The output of the CCR represents the amount of cloud cover in a scene, as the name implies, and is used to remove the effects of clouds in the monochrometer data. CCR data is transmitted once per second in both Discrete and Sweep modes.

The ELM houses the low voltage power supplies and the electrical (Command and Data) interface to and from the spacecraft.

18.9.3 ELECTRICAL AND MECHANICAL BLOCK DIAGRAMS

The SBUV/2 mechanical configuration is shown in Figure 18.9-2. The electrical block diagram is shown in Figure 18.9-3.

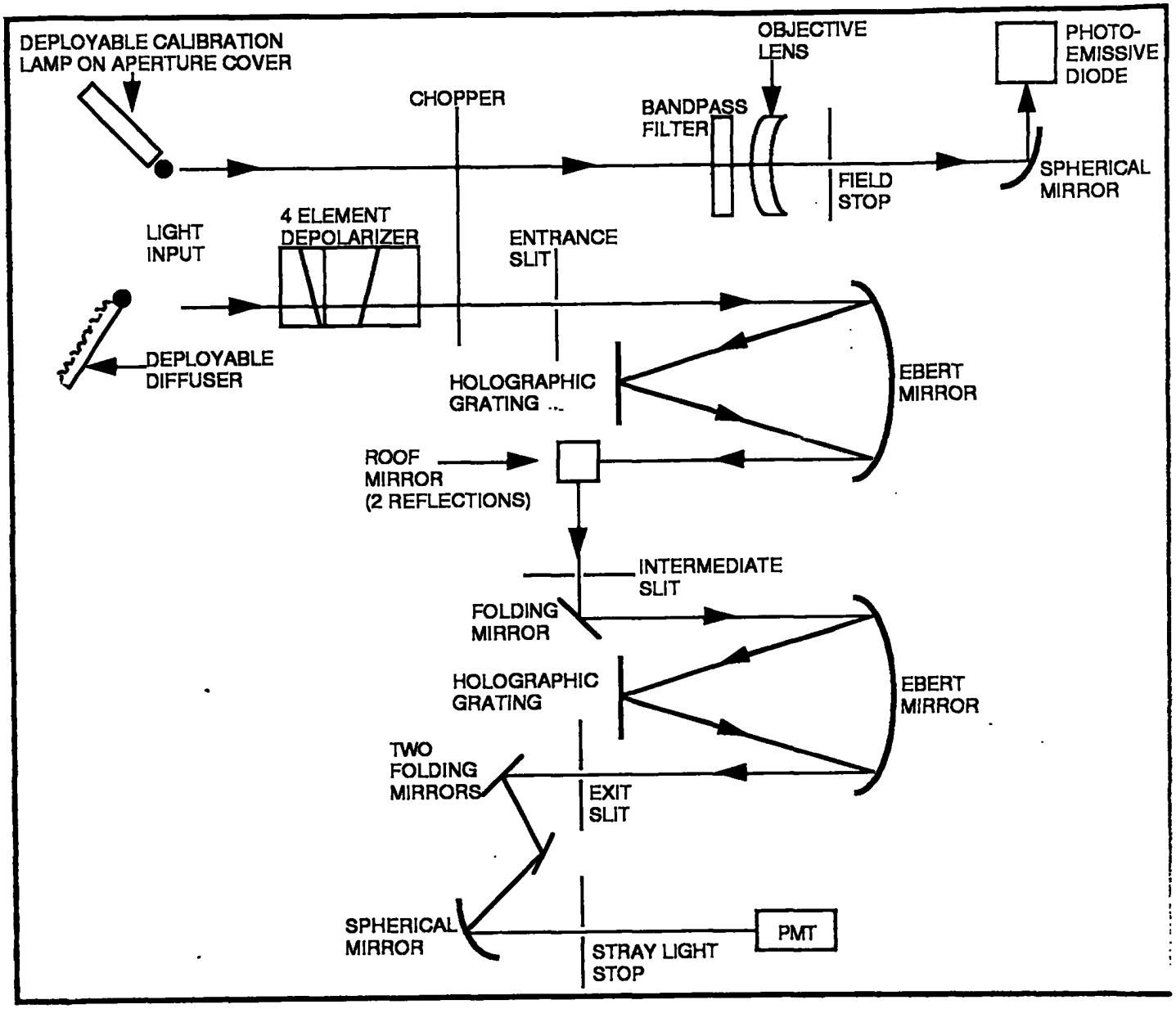

Figure 18.9-1. Simplified Optical Path

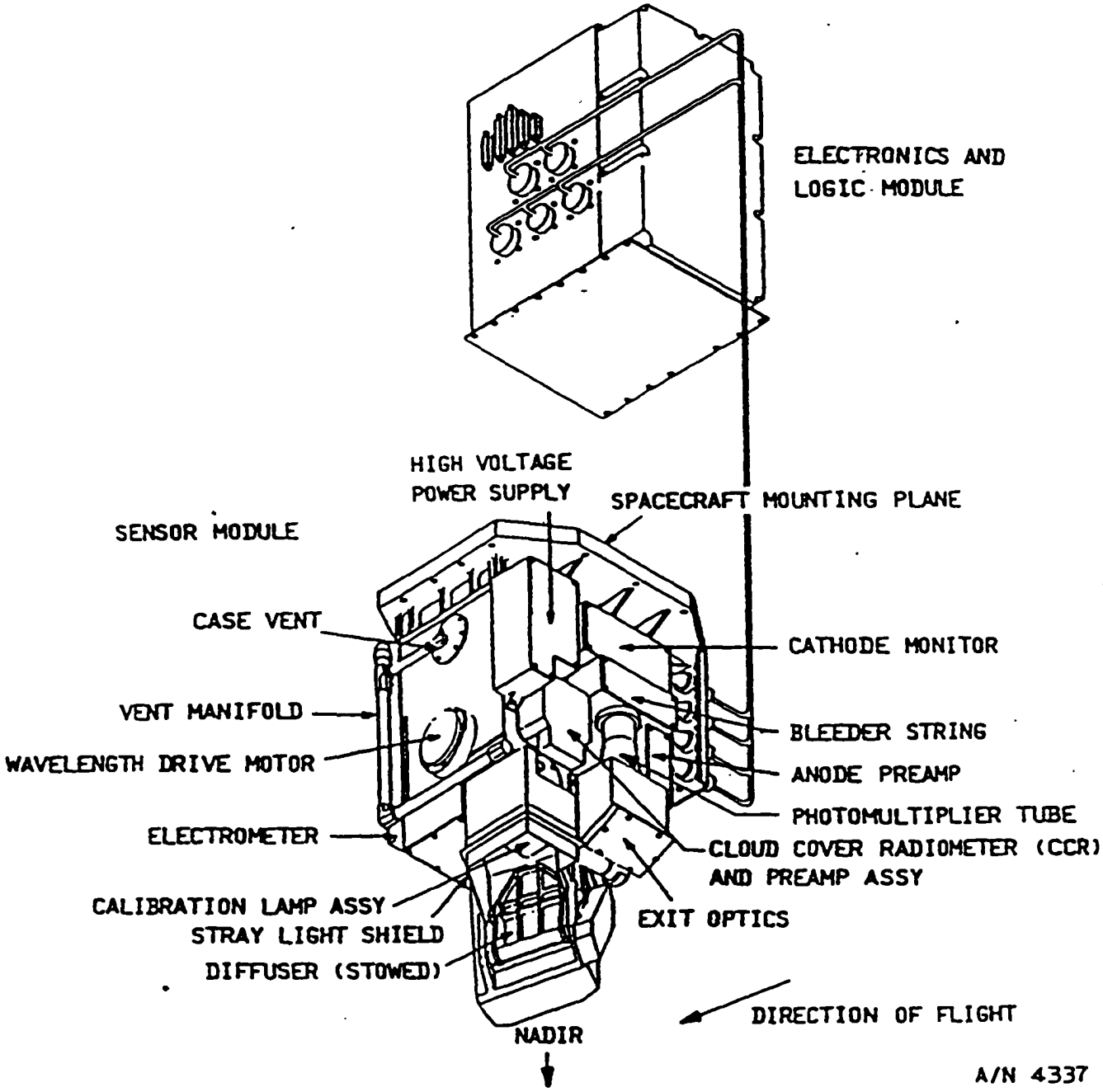

Figure 18.9-2. SBUV/2 Instrument.

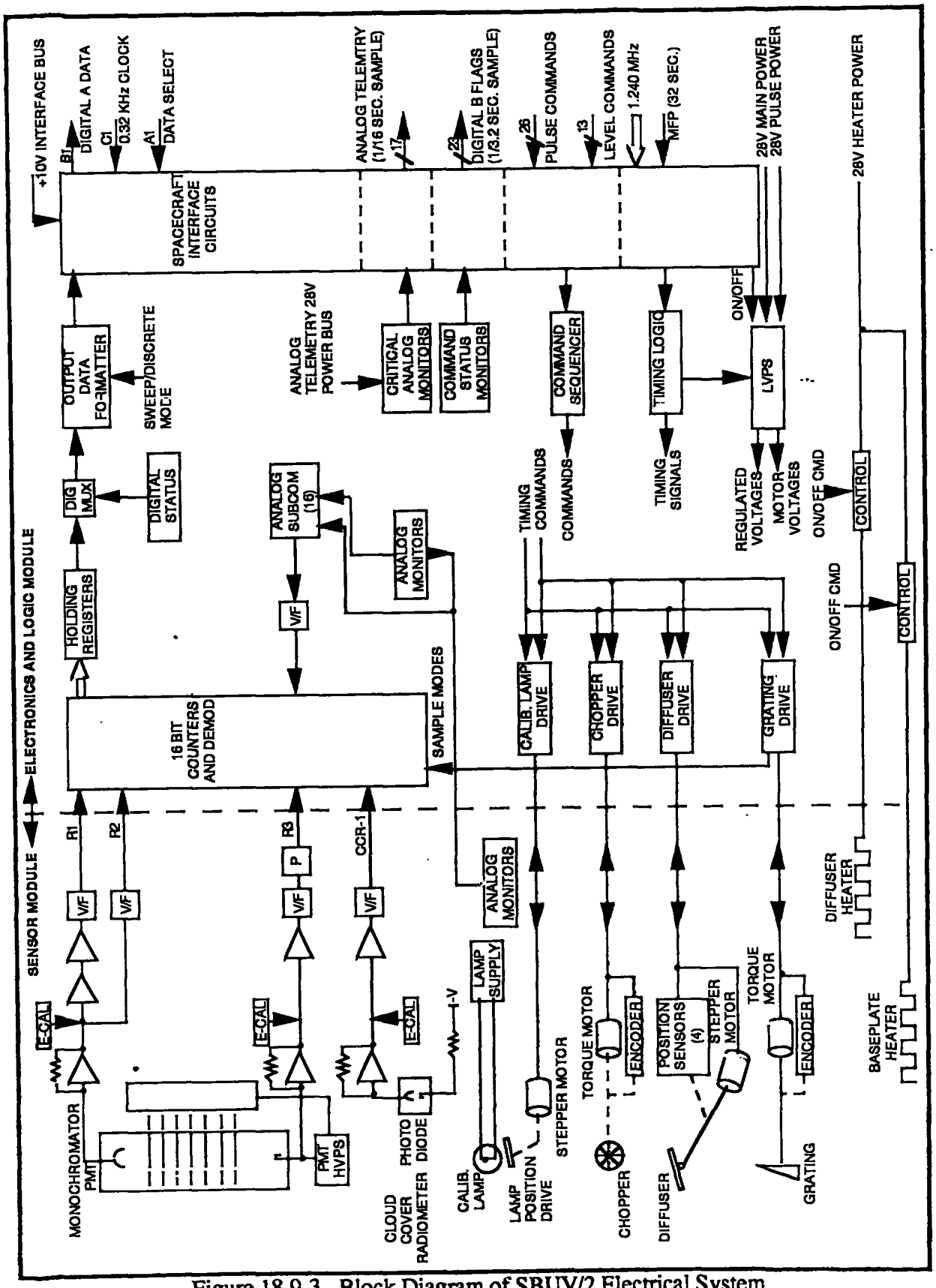

Figure 18.9-3. Block Diagram of SBUV/2 Electrical System.

18.9.4 INTERFACE TIMING

The spacecraft will provide input timing and control signals as shown in Figure 18.9-4.

Clock/Sync	Signal Characteristics (Para) (1)	Repetition Rate	Pulse Width	Std. Interface (2)	Interface Logic Element	Source (Para)	Function
1.248 MHz	3.1.4.3.2	-	-	B	CD4000 Series	XSU	Synchronization of timing of instrument functions to the spacecraft clock
Major Frame	3.1.4.4.1	32 Sec.	240.4 µsec.	A	CD4041	TIP	To synchronize the instrument output data format with the start of each TIP major frame, and to control automatic command sequences
A(1) Data Enable	3.1.4.4.3, 3.1.8.4	Notes (3) & (4)	1.899 ms (3)	B		TIP	Enables readout from the SBUV/2 of two pairs of 8 bit TIP minor frame words
C(1) Data Clock	3.1.4.4.4	8320 pps	24 µsec.	B		TIP	Clocks the instrument output data into the TIP

1. See referenced paragraph in IS-2280259
2. Interface circuits are A = slow B = fast
3. The A(1) Data Sample pulse will occur four times per minor frame.
4. 0.9375 ms per 8-bit sample. If two contiguous samples are required, they will be separated by a 24 µs transition.

Figure 18.9-4. Spacecraft/SBUV/2 Clock and Synchronization Signal Interfaces.

18.9.5 INSTRUMENT TELEMETRY

18.9.5.1 Analog Telemetry

Analog telemetry is sampled using the 16-second subcom generated by the TIP. The SBUV/2 utilizes 16 channels for analog telemetry, as described in Figure 18.9-5.

No.	Telemetry Point Name	Range	Resolution	Channel Numbers
1.	SM Baseplate Temp #2 (1)	(2)	N/A (5)	390
2.	SM Shroud Temp.	(3)	N/A (5)	398
3.	Depolarizer Housing Temp.	(2)	N/A (5)	405
4.	HVPS Temp.	(2)	N/A (5)	413
5.	Diffuser Plate Temp #2 (1)	(4)	N/A (5)	422
6.	Chopper Motor Temp.	(2)	N/A (5)	430
7.	Grating Motor Temp.	(2)	N/A (5)	438
8.	Diffuser Motor Temp.	(2)	N/A (5)	446
9.	Cal Lamp Motor Temp.	(2)	N/A (5)	454
10.	Electrometer Temp.	(2)	N/A (5)	462
11.	Cal. Lamp Pwr. Supply Temp.	(2)	N/A (5)	470
12.	Diffuser Radiator Temp.	(2)	N/A (5)	478
13.	ELM Temp.	(2)	N/A (5)	486
14.	LVPS Temp.	(2)	N/A (5)	494
15.	Not Applicable	N/A	N/A	502
16.	Cal Lamp Heater Current	0.17A nominal	0.1 A/V	510
17.	28V Main Power (6)	28V nominal	9.912V/V	391

(1) Powered from the 28V Analog TLM Bus
(2) -15 to 45°C
(3) -30 to 80°C
(4) 0 to 80°C
(5) Temperature monitors are nonlinear
(6) This telemetry point senses the +28V power line prior to instrument ON/OFF relay.

Figure 18.9-5. SBUV/2 Analog Telemetry.

18.9.5.2 Digital "B" Telemetry

Digital B" telemetry will be scanned every 3.2 seconds using the TIP-generated subcom SBUV/2 requiring the use of 22 Digital "B" telemetry points, as shown in Figure 18.9-6.

No.	Telemetry Point Name	State* Logic "1"	State* Logic "0"	Channel Numbers
1.	** Instrument Power On/Off	ON	OFF	308
2.	** Discrete Cmd Yes/No	Yes	No	315
3.	** Sweep Cmd Yes/No	Yes	No	323
4.	** Cal Cmd Yes/No	Yes	No	339
5.	** Position Cmd Yes/No	Yes	No	347
6.	HV On/Off	ON	OFF	299
7.	Motor Power On/Off	ON	OFF	261
8.	Lamp On/Off	ON	OFF	268
9.	Lamp Disabled/Enabled	Enable	Disable	276
10.	** Lamp Assy Open Cm'd/Close Cm'd	Open Cmd	Close Cmd	285
11.	HV Enabled/Disabled	Enabled	Disabled	292
12.	** Diff. Stow Cmd Yes/No	Yes	No	300
13.	** Diff. Mon. Cmd Yes/No	Yes	No	309
14.	** Diff. Sun Cmd Yes/No	Yes	No	316
15.	** Diff. Decontam Cmd Yes/No	Yes	No	324
16.	Ch Enc Sens Pri/Bkup	Pri	Bkup	332
17.	Grat Enc Sen Pri/Bkup	Pri	Bkup	340
18.	Diff Pos'n Sens Pri/Bkup	Pri	Bkup	314
19.	Lamp Pos'n Sens Pri/Bkup	Pri	Bkup	338
20.	** Grating Drive Fix/Flex	Fix	Flex	291
21.	Cal Lamp Htr On/Off	ON	OFF	327
22.	Diffuser Htr On/Off	ON	OFF	343

* Logic "1" is a "True" or "Zero Voltage" state.

** Bit set indicates last command received at SBUV/2. Command action may or may not have been executed. For confirmation, see Digital A status words one and four.

Figure 18.9-6. Digital "B" Telemetry.

18.9.5.3 Digital "A" Telemetry

Digital "A" data is clocked into the spacecraft TIP whenever the "A_1" Data Enable Pulse is presented to the instrument. Digital "A" data include both instrument data and any housekeeping telemetry required for reduction of observation data. The data format differs with the various SBUV/2 operating modes as described below.

18.9.5.3.1 Discrete Mode - The instrument views the earth's atmosphere, or the sun if the diffuser is so deployed. In this mode, radiometric data is taken at twelve discrete wavelengths. The data format for this mode is shown in Figure 18.9-7. A detailed description of the data format is provided in Figures 18.9-8 through 18.9-10.

18.9.5.3.2 Sweep Mode - The instrument grating sweeps from approximately 400 nm to 160 nm, and data is taken in 0.15 nm increments. If SBUV/2 is viewing the earth, the scene spectral radiance is being measured. If the diffuser is deployed, the instrument is measuring the solar irradiance. The data format for this mode is shown in Figure 18.9-11.

18.9.5.3.3 Wavelength Calibration Mode - The instrument views an on-board Hg lamp source at 12 discrete grating positions bracketing a particular source line. The data format for this mode is the same as that for the Discrete Mode, as shown in Figure 18.9-7.

Line (3)	TIP Minor Frames (2)	Function		Sample Time		Integration Interval	
		Word 1 (4)	Word 2 (4)	Word 1 (7)	Word 2	Word 1	Word 2
L0	0, 10, 20,—310	Status Word 1	Range 1 Data	End of LO, Chan N-1	End of L9, Chan N-1	N/A	1 1/4 Sec and 1/4 Sec (8)
L1	1, 11, 21,—311	Status Word 2	Range 2 Data	Chan N-1	End of L9, Chan N-1	N/A	1 1/4 Sec and 1/4 Sec (8)
L2	2, 12, 22,—312	Analog Sub Mux	Range 3 Data	End of LO/ L1, Chan N	End of L9, Chan N-1	0.1	1 1/4 Sec and 1/4 Sec (8)
L3	3, 13, 23,—313	Memory Verify	0000	End of L1, Chan N	N/A	N/A	N/A
L4	4, 14, 24,—314	Status Word 3	0000	Start of LO, Chan N	N/A	N/A	N/A
L5	5, 15. 25,—315	Status Word 4	0000	Start of LO, Chan N	N/A	N/A	N/A
L6	6, 16, 26,—316	Grating Postion	0000	1/2 into L7 Alternates End of L9, Chan N-1	N/A	N/A	N/A
L7	7, 17, 27,—317	CCR Data	0000	End of L9, Chan N-1	N/A	1 1/4 Sec (8) and 1/4 Sec	N/A
L8	8, 18, 28,—318	RDCL/GPE(6)	0000	End of L6/L7, Chan N	N/A	0.1 Sec	N/A
L9	9, 19, 29,—319	Frame Sync Code	0000	Start of LO, Chan N	N/A	N/A	N/A

NOTES
(1) Includes discrete, calib, and position modes.
(2) Format is the same for all major frames.
(3) The basic SBUV/2 data frame is a 20-word block repeating at one second intervals
(4) Word 1 corresponds to the 16 bits in TIP words 36 and 37, MSB sent first. Word 2 corresponds to the 16 bits in TIP words 80 and 81, MSB sent first.
(5) Analog sub-mux is 16 channels deep.
(6) Radiometric DC level/grating position error.
(7) Channel N is the present 1 second time interval. Channel N-1 is the previous 1 second time interval.
(8) In every two second interval, signal integration occurs between 3/4 and 2 secs; signal is sampled and readout at the end of 1 sec and 2 secs.

Figure 18.9-7. SBUV/2 Data Format Discrete Modes (1).

Name of Function	Format Location Word	Line	Bit Numbers MSB 1	2	3	4	5	6	7	8	9	10	11	12	13	14	15	16 LSB
Frame Sync Code & Submultiplexer Channel Number	1	9	2^3	2^2	2^1	2^0	1	1	0	1	0	1	1	0	0	0	0	0
			Frame Sync Submultiplexer Channel Numbers															
Analog Sub Mux (see Figure 18.9-9 for cummutation scheme)	1	2	$2^7 2^6 2^5 2^4 2^3 2^2 2^1 2^0$				$2^7 2^6 2^5 2^4 2^3 2^2 2^1 2^0$							Full Scale Counts 255 = 5.1 V, all Analog Channels				
			Chn. A				Chn. B											
Radiometric DC Level/Grating Postion Error (3)	1	8	Full Scale Counts 255 = 5.1 Volts, NOTE: RDCL F.S. Current 91.5 pa															
Monochromator Range Data	2		2^{15} ——— 2^0 Maximum Count = 65535(1)															
			Full Scale Counts 65536															

		Full Scale Current Disc	Sweep
0	Range 1(2)	100 pa	1.25 na
1	Range 2(2)	10 na	125 na
2	Range 3(2)	1 µa	12.5 µa
Cloud Cover Radiometer Data 1 7	CCR	2.4 na	30 na

Memory Verification 1 3 2^{12} position Data in Memory $2^0 S_1 S_0 F$

- Repeats every 128 sec.
- Reads memory as indicated by memory bits shown to right.
- Memory location readout in order starting with Word 0 segment 0 of fixed memory at TIP major frame pulse.

Segment	S_1	S_0	Program	F
0	0	0	Fixed	1
1	0	1	Flex	0
2	1	0		
3	1	1		

(1) Overflow flags (status 3 bits 1, 2, 3, 4).
(2) Current referred to the PMT anode.
(3) Grating Motor Current, Grating Position Error, and Grating Coarse Error are expected to always read 0 to 10 counts (telemetry points are grounded) and data should be disregarded.

Figure 18.9-8. SBUV/2 Data Format Discrete Mode Detailed Description.

Name of Function	Format Location Word	Line	Bit Numbers MSB 1	2	3	4	5	6	7	8	9	10	11	12	13	14	15	LSB 16
Grating Position	1	6	2^{12}														$2^0 S_1 S_0 L$	

Number greater than 0 = CW of Index

Number less than 0 = CCW of Index

Index = all zeros

1 bit CW = 0 01 (MSB LSB)

1 bit CCW = all ones

Segment Being Read	S_1	S_0
0	0	0
1	0	1
2	1	0
3	1	1

This is the actual position number. Code is in 2's compliment.

Digital Lock
L = 1 (Locked)

Range Identification — Status Words 1 & 2

Range Selected	Bit A	Bit B
R_1	0	1
R_2	1	0
R_3	1	1

Sweep Mode Major Frame Counter — Status Word 1 Bits 3,4&5

Frame	Count	Bit No. 3	4	5
None	0	0	0	0
(First)	1	0	0	1
2	2	0	1	0
3	3	0	1	1
4	4	1	0	0
5	5	1	0	1
6(Last)	6	1	1	0
Binary Weight		2^2	2^1	2^0

Figure 18.9-8. SBUV/2 Data Format Discrete Mode Detailed Description (Continued).

TEMPERATURE MONITORS

1. Differential Monitors - $T_D=T_A-T_R$; $N_A=N_R+0.1075N_D-13.7$(1)
2. Single Pt Monitors:

Temp °C	Thermistor Ohms	Output Volts/Counts (N)				
		Shroud -30 to 80	Diff. A to B Reference	0 to 80°	-15 to 45°	-5 to 35°
-30	135.2K	4.74/237				
-20	78.91K	4.57/228			5.15	
-15	61.02K	4.45/222	3.58/179		5.01/250	
-10	47.54K	4.32/216	3.41/170	5.513	4.84/242	5.17
-5	37.31K	4.16/208	3.22/161			4.95/247
0	29.49K	3.99/199	3.01/150	4.98/249	4.42/221	4.70/235
5	23.46K	3.79/189	2.79/140			
10	18.79K	3.57/178	2.57/128	4.35/217	3.92/196	4.13/206
15	15.13K	3.34/167	2.33/117			
20	12.26K	3.10/155	2.11/105	3.67/183	3.36/168	3.52/176
25	10.00K	2.86/143	1.89/94	3.33/167	3.08/154	
30	8.194K	2.61/130	1.68/84	3.00/150	2.79/139	2.90/145
35	6.752K	2.37/118	1.48/74			2.60/130
40	5.592K	2.14/107	1.30/65	2.39/119	2.25/112	2.32/116
45	4.655K	1.91/95	1.14/57		2.01/100	
50	3.893K	1.71/85		1.86/93	1.78/89	1.82/91
60	2.76K	1.35/67		1.44/72	1.39/69	1.41/70
70	1.99K	1.05/52		1.1/55	1.08/54	1.09/54
80	1.458K	0.81/41		.85/42	.831/41	

(1) N_A = Thermistor "A" Temp in counts.
N_D = Differential Temp in counts.
N_R = Reference Temp in counts.

Figure 18.9-8. SBUV/2 Data Format Discrete Mode Detailed Description (Continued)

Voltage Monitors Function	Conversion Factor
HVPS Volts	6 V/N (1)
E Cal Ref	0.04 V/N, 6.4 V/160 Cnts Nom, ±.6V Limits
15 V Sensors	0.1 V/N, 15 V/150 Cnts Nom, ±3.0 V limits
-15 V Sensors	$V=0.6083_{N5}-0.5059_{N15}$ (2)
24 V Motor	0.198 V/N, 24V121 Cnts Nom, ±5 V Limits
5 V LED	0.0333 V/N, 5V/150 Cnts Nom, ±1 V Limits
10 V Logic	0.0667 V/N, 10V/150 Cnts Nom, ±1 V Limits
*28V	9.912V/V, 28V/2.82V Nom ±4 V Limits
25V	0.198 V/N, 25 V/126 Cnts Nom, ±2.5 V Limits
15V Servo	0.1 V/N, 15V/150 Cnts Nom, ±1.5 V Limits
-15V Servo	$V=0.6083_{N5}-0.5059_{N15}$ (2)
Thermistor Bias (10 V)	0.0667 V/N, 10 V/150 Cnts Nom, ±1 V Limits
Current Monitors	
Chop Motor	0.002 A/N
Diffuser Motor	0.004 A/N
Cal Lamp Current	5.22μA/N
Lamp Motor	0.004 A/N
*Cal Lamp Heater	0.1 A/volt 0.17 A nominal
Miscellaneous	
Chopper Phase Error	0.0985 V/N
(1) N = counts	
(2) N_5 counts from 5v LED	

*Analog Telemetry

Figure 18.9-8. SBUV/2 Data Format Discrete Mode Detailed Description (Continued).

		CMD Seq. State 2^2	2^1	2^0	
Discrete Sun Command Sequence	1-0	0	0	0	Disc. Sun Enable ON
	1-1	0	0	1	
	1-2	0	1	0	
		All Other State Not Valid			
Sweep Sun Command Sequence Step No.	2-0	0	0	0	Sweep Sun Enable ON
	2-1	0	0	1	
	2-2	0	1	0	
	2-3	0	1	1	
		All Other State Not Valid			
*W/L Cal Command Sequence Step No.	3-0	0	0	0	W/L Cal Enable ON
	3-1	0	0	1	
	3-2	0	1	0	
	3-3	0	1	1	
	3-4	1	0	0	
	3-5	1	0	1	
	3-6	1	1	0	
	3-7	1	1	1	
		All Other State Not Valid			

Description of the CMD Sequence State Monitors 2^2, 2^1, and 2^0

*W/L = wavelength

TIMING MONITORS

E Cal Step No.	16 Sec.	8 Sec.	4 Sec.	Retrace
A	1	0	0	ON
B	1	0	1	
C	1	1	0	
D	1	1	1	
E	0	0	0	
A	0	0	1	
A	0	1	0	
A	0	1	1	
	E Cal	OFF		OFF

Description of the E Cal Step Decoding using Timing Monitors and The Retrace Monitor.

NOTE: Timing monitors are sampled at Channel N-1 (1 sec prior to readout).

Figure 18.9-8. SBUV/2 Data Format Discrete Mode Detailed Description (Continued).

Bits 1 Thru 8 Channel A		Bits 9 Thru 16 Channel B	
CH No.	Function	CH No.	Function
CH1A	Chop Motor Curr	CH1B	Spare
CH2A	Diff Motor Curr	CH2B	Diffuser Plate Temp (1)
CH3A	HVPS Volts	CH3B	SM Baseplate Temp (2)
CH4A	Thermistor Bias (10V Ref)	CH4B	25V Pwr Volts
CH5A	Cal Lamp Temp (1)	CH5B	15V Servo Volts
CH6A	E Cal Ref Volts	CH6B	-15V Servo Volts
CH7A	15V Sensors Volts	CH7B	CCR Diode Temp (3)
CH8A	-15V Sensors Volts	CH8B	SM Differential Temp Y Axis (4)
CH9A	24V Motor Volts	CH9B	SM Differential Temp Z Axis (4)
CH10A	5V LED Volts	CH10B	Differential Ref Temp Z Axis
CH11A	10V Logic Volts	CH11B	Differential Ref Temp Y Axis
CH12A	Cal Lamp Curr	CH12B	PMT Cathode Temp (3)
CH13A	Spare	CH13B	Spare
CH14A	Signal Return	CH14B	Chopper Phase Error
CH15A	Signal Return	CH15B	Spare
CH16A	Lamp Motor Curr	CH16B	Spare

(1) 0 to 80°C
(2) -15 to 45°C
(3) -5 to 35°C
(4) ±5°C

Figure 18.9-9. SBUV/2 Data Format Discrete Mode Analog Sub-Multiplexer Data Assignment.

Bit	Use	Assignment of Logic State 1 (GND)	0 (+10V)
Status Word #1			
1	Master Power ON/OFF	OFF	ON
2	Data Format	Sweep	Discrete
3	Sweep Mode Major Frame Word 2^2	True	False
4	Sweep Mode Major Frame Word 2^1	True	False
5	Sweep Mode Major Frame Word 2	True	False
6	Retrace	ON	OFF
7	16 sec. (2^2)	True	False
8	8 sec. (2^1)	True	False
9	4 sec. (2^0)	True	False
10	CMD Seq. (2^2)	True	False
11	CMD Seq. (2^1)	True	False
12	CMD Seq. (2^0)	True	False
13	Range ID B-L0	ON	OFF
14	Range ID A-L0	ON	OFF
15	Range ID B-L1	ON	OFF
16	Range ID A-L1	ON	OFF

Figure 18.9-10. SBUV/2 Data Format Discrete Mode Digital A Status Word Description.

Bit	Use	Assignment of Logic State 1 (GND)	0 (+10V)
Status Word #2			
1	Range ID B-L2	ON	OFF
2	Range ID A-L2	ON	OFF
3	Range ID B-L3	ON	OFF
4	Range ID A-L3	ON	OFF
5	Range ID B-L4	ON	OFF
6	Range ID A-L4	ON	OFF
7	Range ID B-L5	ON	OFF
8	Range ID A-L5	ON	OFF
9	Range ID B-L6	ON	OFF
10	Range ID A-L6	ON	OFF
11	Range ID B-L7	ON	OFF
12	Range ID A-L7	ON	OFF
13	Range ID B-L8	ON	OFF
14	Range ID A-L8	ON	OFF
15	Range ID B-L9	ON	OFF
16	Range ID A-L9	ON	OFF
Status Word #3			
1	R1 Over Range/On Scale	Over Range	On Scale
2	R2 Over Range/On Scale	Over Range	On Scale
3	R3 Over Range/On Scale	Over Range	On Scale
4	CCR Over Range/On Scale	Over Range	On Scale
5	Code Address B	1	0
6	Code Address B	1	0
7	Code Data 1	1	0
8	Code Data 2	1	0
9	Code Data 3	1	0
10	Code Data 4	1	0
11	Code Data 5	1	0
12	Code Data 6	1	0
13	Discrete Sun Enable	ON	OFF
14	Sweep Sun Enable	ON	OFF
15	Wavelength Calibration Enable	ON	OFF
16	SPARE		ALWAYS OFF
Status Word #4			
1	Diffuser Stow Position	Stow	Not Stowed
2	Diffuser Monitor Position	Monitor	Not Monitor
3	Diffuser Sun Position	Sun	Not Sun
4	Diffuser Decontam Position	Decontam	Not Decontam
5	Discrete Mode	ON	OFF
6	Sweep Mode	ON	OFF
7	Diffuser Position Valid	Valid	Not Valid
8	Diffuser Timer	Time Out	Not Time Out
9	Calib. Lamp Open	OPEN	NOT OPEN
10	Calib. Lamp Closed	CLOSED	NOT CLOSED
11	Calib. Lamp Position Valid	Valid	Not Valid
12	Calib. Lamp Timer	Time Out	Not Time Out
13	Calib. Mode	ON	OFF
14	Postion Mode	ON	OFF
15	Grating Fix/Flex	FIX	FLEX
16	Grating Index Found	Found	Not Found

Figure 18.9-10. SBUV/2 Data Format Discrete Mode Digital A Status Word Description (Continued).

Line	Tiros Minor Frames	Word 1	Word 2	Sample Time		Integration Period	
				Word 1	Word 2	Word 1	Word 2
L0	0, 10, 20,—310	Status Word 1	Selected Range Data		End of L9		L9 (0.1 Sec)
L1	1, 11, 21,—311	Status Word 2	Selected Range Data		End of L0		L0 (0.1 Sec)
L2	2, 12, 22,—312	Analog Sub Mux	Selected Range Data		End of L1		L1 (0.1 Sec)
L3	3, 13, 23,—313	Memory Verify	Selected Range Data		End of L2		L2 (0.1 Sec)
L4	4, 14, 24,—314	Status Word 3	Selected Range Data	Same as	End of L3	Same as	L3 (0.1 Sec)
L5	5, 15, 25,—315	Status Word 4	Selected Range Data	Discrete Mode	End of L4	Discrete Mode	L4 (0.1 Sec)
L6	6, 16, 26,—316	Grating Position	Selected Range Data	(2)	End of L5		L5 (0.1 Sec)
L7	7, 17, 27,—317	CCR Data	Selected Range Data	(2)	End of L6	(1)	L6 (0.1 Sec)
L8	8, 18, 28,—318	RDCL/GPE	Selected Range Data		End of L7		L7 (0.1 Sec)
L9	9, 19, 29,—319	Frame Sync Code	Selected Range Data		End of L8		L8 (0.1 Sec)

(1) CCR integration period: 1 second.
(2) Sample time: end of L9, Chan. N-1.

Figure 18.9-11. SBUV/2 Data Format Sweep Mode.

18.9.5.3.4 Position Mode - The instrument grating moves to a pre-selected position and remains there until commanded into another mode. Radiometric data is taken continuously as in the Discrete Mode. The data format is as shown in Figure 18.9-7.

18.9.6 COMMANDS

18.9.6.1 Command Description

Thirty-eight commands are required for the SBUV/2; of these, 25 are pulse-discrete (i.e., latching) and 13* are level discrete. Two of the pulse-discrete commands are "SBUV/2 Power ON" and "SBUV/2 Power OFF". Three pulse discrete commands are the "operational" commands which, via special instrument logic, initiate an automatic, timed sequence of other commands specific to that function. These operational commands are designed for in-orbit use utilizing the spacecraft stored command table.

*Note: Eight level commands are for loading the grating drive flex memory and may be located on the same CXU buffer so that all eight bits can be preset using a single command if desired.

For "Level" commands, the "On", "True", or "Low" level is indicated by the logic "1" or zero-volt level. The "Off", "False", or "High" level is indicated by a logic "0" or +10 volt level for CMOS logic (+5 volts for TT1).

A complete description of SBUV/2 commands, is shown in Figure 18.9-12.

No.	Command Name	MNEMONIC	Effect
1	Instrument Power ON/Lamp OFF/High Voltage OFF/High Voltage Disable/ System Reset	SBIPN	This command applies power to the instrument, initializes all control logic, returns the grating drive to its home position while, at the same time, it resets both the high voltage ON/OFF relay and the cal lamp ON/OFF relay to the OFF state, and resets the high voltage ENABLE/DISABLE relay to the DISABLE state. The set of events comprising the initialization of control logic is as follows: All grating drive logic is interrupted upon receipt of this command and the grating immediately returns to its home position. It will remain there until a new grating mode command is sent. The automatic command sequence controller consisting of a 4 bit internal time and 3 bit state counter will be reset upon receipt of this command. Any automatic sequences in progress will be interrupted and terminated and the grating will return to its home position. The diffuser and cal lamp assembly will remain in any fixed position or, if moving, will stop in place. This command is used to guarantee that the HV power supply and the calibration lamp will be off when the instrument is turned ON. This command should not be used for this purpose during normal instrument operation.
2	Instrument Power OFF	SBIPF	This command removes all +28 volt instrument power from the instrument.
3	Grating Mode 1 (Discrete)	SBGM1	This command initiates the Discrete Mode of operation. Upon receipt of this command all other grating modes are inhibited but the instrument will complete the mode in progress before entering the Discrete Mode. The new mode will begin with the first MFP following completion fo the previous sequence.
4	Grating Mode 2 (Sweep)	SBGM2	This command initiates the Sweep Mode of operation. Upon receipt of this command all other grating modes are inhibited but the instrument will complete the mode in progress before entering the Sweep Mode. The new mode will begin with the first MFP following completion of the previous sequence.
5	Grating Mode 3 (Wavelength Cal)	SBGM3	This command initiates the Wavelength Cal Mode of operation. Upon receipt of this command all other grating modes are inhibited but the instrument will complete the mode in progress before entering the Wavelength Cal Mode. The new mode will begin with the first MFP following completion fo the previous sequence. NOTE: This command effects the grating drive only; to do a wavelength calibration, the Cal Lamp will first have to be turned on and allowed to stabilize and then the lamp assembly will have to be commanded to its closed position.

Figure 18.9-12. Spacecraft/SBUV/2 Command Interfaces.

No.	Command Name	MNEMONIC	Effect
6	Grating Mode 4 (Position)	SBGM4	This command initiates the Position Mode of operation. Upon receipt of this command all other grating modes are inhibited but the instrument will complete the mode in progress before entering the Position Mode. The new mode will begin with the first MFP following completion of the previous sequence. In this mode, the grating moves to a preselected position and remains there until another mode command is sent. Upon receipt of another mode command, the grating will start the new mode at the next MFP.
7	High Voltage ON	SBHVN	This command closes the HV ON relay and applies power to the HV supply if the High Voltage ENABLE command has been previously sent.
8	Motor Power ON	SBMPN	This command applies power to the DC/DC converter which supplies all motor drivers in the instrument.
9	Motor Power OFF	SBMPF	This command removes power from all motors in the instrument.
10	Lamp Enable and ON	SBLEN	This command closes both the cal lamp ENABLE/DISABLE, and cal lamp ON/OFF relays and applies power to the calibration lamp. This command is to be used for normal turn-on of the Cal Lamp.
11	Lamp Disable	SBLDA	This command opens the cal lamp ENABLE/DISABLE relay and removes power from the calibration lamp. This is the primary mode of lamp shut-off in normal operation. This use of two relays is provided to insure that the cal lamp can be turned off should a failure occur in the primary relay.
12	Lamp Assembly Open	SBLAO	This command moves the calibration lamp assembly to its open position. In this position, the instrument can view Earth or the diffuser if deployed. In this position, the cal lamp is used to illuminate the diffuser when properly deployed.
13	Lamp Assembly Close	SBLAC	This command closes the lamp assembly over the entrance aperture of the instrument. This position is used with the lamp ON to perform a wave length calibration, and, for part of the diffuser monitoring exercise. This is the normal position for the lamp assembly when the instrument is off: on the spacecraft, in storage, during launch, etc. In this position, the lamp assembly acts as a contamination cover for the entrance aperture.
14	High Voltage Enable	SBHVE	This command closes the HV ENABLE/DISABLE relay and applies power to the HV supply if the HV ON command has been previously sent. The HV enable and HV ON commands are incorporated in the instrument to prevent inadvertant high voltage turn-on.

Figure 18.9-12. Spacecraft/SBUV/2 Command Interfaces (Continued).

No.	Command Name	MNEMONIC	Effect
15	Diffuser Position 1 (Stow)	SBDP1	This command moves the diffuser to its STOW position. The STOW position is the protected position of the diffuser where it is to remain when not in use. This is the normal position for the diffuser when the instrument is off, on the spacecraft, in storage, during launch, etc. In this position, the diffuser is enclosed and protected from contamination.
16	Diffuser Position 2 (Monitor)	SBDP2	This command moves the diffuser to its monitor position where it can be viewed by the instrument when the cal lamp is ON. This measurement (in conjunction with an immediate, previous or subsequent, direct observation of the cal lamp [lamp assembly closed]) is used to detect changes in the optical properties of the diffuser.
17	Diffuser Position 3 (Sun)	SBDP3	This command moves the diffuser to the position used for observing the sun. If this command is sent when the spacecraft is in the proper position of its orbit, a direct solar observation can be made.
18	Diffuser Position 4 (Decontaminate)	SBDP4	This command moves the diffuser to a position looking away from the instrument and sun. If the diffuser heater is energized, molecular contaminate can be safely driven off.
NOTES for Commands 12 through 18: For NOAA-HIJKL&M, an electrical lockout exists which prevents the diffuser from moving from any position to another unless and/or until the cal lamp door assembly is in its OPEN position. The diffuser cannot be deployed or stowed with the cal lamp door CLOSED without mechanical interference.			
19	Chopper Encoder Sensor Primary)/Backup	SBCEP SBCEB	All encoder and position sensors are redundant. This command selects one set or the other.
20	Grating Encoder Sensor Primary/Backup	SBGEP SBGEB	
21	Diffuser Position Sensor Primary/Backup	SBDPP SBDPD	
22	Lamp Position Sensor Primary/Backup	SBLPP SBLPB	These commands select either the primary or back-up set of sensors in each case.
23	Grating Drive MEM, FIX/FLEX	SBFIX SBFLX	This command selects either the fixed memory which is preprogrammed prior to flight or the flex memory which can be programmed after launch. Note: Any interruption of instrument power will erase the flex memory. Each memory is set-up to contain the grating positions of the 12 Discrete Mode wavelengths, the starting positions for both the Sweep Mode and wavelength Calibration Mode and the position at which the grating will stop in the Position Mode.
24	Code Strobe	SBCST	This command is used to strobe the code address and code data bits into the instrument.
Commands 25 thru 32 - These commands are used in loading the flex memory and selecting the control segment of either memory. The detailed use of these commands is defined in Paragraph 3.5.3.4. of 2295548.			
25	Code Address A	SBAAT SBAAF	

Figure 18.9-12. Spacecraft/SBUV/2 Command Interfaces (Continued).

No.	Command Name	MNEMONIC	Effect
26	Code Address B	SBABT SBABF	
27	Code Data Bit 1	SBA1T SBA1F	
28	Code Data Bit 2	SBA2T SBA2F	
29	Code Data Bit 3	SBA3T SBA3F	
30	Code Data Bit 4	SBA4T SBA4F	
31	Code Data Bit 5	SBA5T SBA5F	
32	Code Data Bit 6	SBA6T SBA6F	
33	Cal Lamp Heater ON	SBBHN	This command enables the cal lamp door heater (which replaces the baseplate heater) and is provided to keep the lamp warm to protect it and to greatly improve its output stability.
34	Diffuser Heater ON	SBDHN	This command turns on the diffuser decontamination position.
35	Heaters OFF	SBHOF	This command turns off both the baseplate and decontamination heaters.
36	Not Used (Spare, at instrument only)		
37	Discrete Sun Enable	SBDSE	This command initiates the DISCRETE SUN ENABLE operational command sequence which allows the sun to be spectrally scanned in the Discrete Mode. Since the sun will be visible in only a portion of each orbit, and since this period of visibility will change with time and orbit, it is not possible to rely on direct communication with the CDA stations so that the necessary commands can be sent and the sun observed in real time. The stored command table must be used in this mode. In the Discrete Mode, the instrument will complete the scan in progress upon receipt of this command and the automatic sequence will begin with the next MFP. The diffuser will then be deployed to the sun position and 8 major frames of Discrete Mode solar irradiance data will be taken. The diffuser will then be stowed and normal Discrete Mode observation of Earth will
			continue. Ten major frames are required in this sequence. In the Sweep Mode the diffuser will be deployed at the next MFP which will contaminate the Sweep Mode data. The Sweep will continue until complete before the actual Discrete Mode scan of the sun is begun. Ten major frames plus the uncompleted portion of the Sweep mode in progress are required for this sequence.

Figure 18.9-12. Spacecraft/SBUV/2 Command Interfaces (Continued).

No.	Command Name	MNEMONIC	Effect
38	Sweep Sun Enable	SBSSE	This command initiates the SWEEP SUN ENABLE operational command sequence which allows the sun to be spectrally scanned in the Sweep Mode. Again, it will be possible to send the necessary commands when the spacecraft is in contact with CDA station and guarantee that the sun will be visible in real time. The stored command table must be used and only one command is required to initiate this sequence. In the Discrete Mode, upon receipt of this command, the instrument will complete the scan in progress and the automated sequence will begin at the next MFP. The diffuser will then be deployed to the sun position which contaminates this Major of Frame data) and two spectral Sweep Mode scans of the sun will be made. Start of the Sweep Mode will begin the second MFP following receipt of the command. The diffuser will then be stowed and the instrument commanded to the Discrete Mode of operation. Fourteen major frames are required for execution of this sequence. If the instrument should be in the Sweep Mode of operation upon receipt of this command, the diffuser will be deployed at the next MFP and the balance of the data in the current sweep will be contaminated. The automatic sequence will begin at the first MFP following completion of the Sweep in progress. Fourteen major frames plus the uncompleted portion of the Sweep Mode in progress are required for this sequence.
39	Wavelength Calibration Enable	SBWCE	This command initiates the WAVELENGTH CAL ENABLE operational command sequence which accomplishes two separate functions. It allows the instrument to view the on-board Hg lamp and perform a wavelength calibration. It also allows the instrument to view the Hg lamp from the diffuser, so that changes in the optical properties of the latter can be determined. Even though this series of measurements can be done at anytime, it would require a significant number of commands to accomplish if not automated. The automated sequence allows use of the stored command table and its use for this purpose is recommended because the data can be collected

Figure 18.9-12. Spacecraft/SBUV/2 Command Interfaces (Continued).

No.	Command Name	MNEMONIC	Effect
39 (Cont)	Wavelength Calibration Enable	SBWCE	when the spacecraft is over the dark portions of Earth where no useful Earth data is available. The sequence of events initiated upon receipt of this command is as follows: The cal lamp is turned on and the grating commanded to the Sweep Mode. The lamp is allowed to warm-up for 2 sweeps (384 Secs.) and the diffuser is deployed to its monitor position. Sweep Mode data is then taken for two sweeps after cal lamp warmup. If the lamp assembly is open at sequence start, it will remain open during these two steps. The cal lamp assembly is then closed and two sweeps of Sweep Mode data taken; the lamp assembly is then opened for two sweeps, and finally, the cal lamp assembly is closed again and an additional two sweeps of Sweep Mode data taken. The grating is then commanded into the Wavelength Calibration Mode and eight major frames of data taken. The grating is then commanded to the Discrete Mode, the calibration lamp turned off, the cal lamp assembly commanded to its OPEN position and diffuser commanded to its STOW position which concludes the sequence. Seventy major frames are required for this sequence. The instrument resumes normal Discrete Mode data collection.

Figure 18.9-12. Spacecraft/SBUV/2 Command Interfaces (Continued).

18.9.6.2 Safe State Definition

The NOAA spacecraft will execute the following SBUV/2 commands as part of a "Safe State" procedure in response to anomalies or emergencies which may arise during the mission: These commands come from the "Safe State Table" stored in the onboard computers or may come from ground commands using the following commands (mnemonics indicated in **boldface**).

1. Issue Power "ON" command; Causes an internal Master Reset sequence to occur.
   Command **(SBIPN)**

2. Issue Motor Power "ON" command
   Command **(SBMPN)**

3. Issue Heaters "OFF" commands **(SBHOF)**

4. Command Lamp Assembly to "OPEN" **(SBLAO)**
   -Wait 6 seconds

5. Command Diffuser to Position 1 ("STOW") **(SBDP1)**
   -Wait 10 seconds

6. Command Lamp Assembly "CLOSED" **(SBLAC)**
   -Wait 6 seconds

7. Command Baseplate Heater "On" **(SBBHN)**

8. Remove all bilevel input signals by commanding the following modes:
   Chopper encoder Primary **(SBCEP)**
   Grating Encoder Sensor Primary **(SBGEP)**
   Diffuser Position Encoder to Primary **(SBDPP)**
   Lamp Position Encoder to Primary **(SBLPP)**
   Grating Memory to "FIX" **(SBFIX)**
   All Memory Data and Address lines to 0, **(CXPIO 3400)**

9. Command SBUV Instrument Power to "OFF" **(SBIPF)**

18.9.6.3 Power Down Sequence

The power down sequence is identical for either a normal or emergency situation. Commands/mnemonics are indicated in **boldface.**

1. Command Instrument Power ON **(SBIPN)**

2. Command Heater OFF **(SBHOF)**

3. Command Grating Mode 4 (Position) **(SBGM4)**
   Note: Command (4) and (5) assume that the motor power is ON and the lamp assembly is OPEN.

4. Command Diffuser Position 1 (Stowed) **(SBDP1)**

5. Command Lamp assembly CLOSED **(SBLAC)**

   Note: Verify from Digital A telemetry that:

   the diffuser is stowed: Status Word 4, Bit 1 = 1
   and
   that the Lamp Assembly is closed: Status Word 4, Bit 10 = 1

6. Command Motor Power OFF **(SBMPF)**

7. Command Cal Lamp Heater ON **(SBBHN)**

8. Command Instrument Power OFF **(SBIPF)**

18.9.6.4 Power Up Sequence

The initial turn-on sequence is defined in Section 18.9.9, Activation and Evaluation Procedures. The normal turn-on sequences, applicable for both routine situations and from Safe State are (Commands/mnemonics are in **boldface**):

1. Command Instrument Power ON **(SBIPN)**

2. Command Chopper Encoder Sensor PRIMARY **(SBCEP)**

3. Command Motor Power ON **(SBMPN)**

4. Command Grating Encoder Sensor PRIMARY **(SBGEP)**

5. Command Lamp Position Sensor PRIMARY **(SBLPP)**

6. Command Diffuser Position Sensor PRIMARY **(SBDPP)**

7. Command Instrument Power ON **(SBIPN)**

8. Command Fix Memory Mode **(SBFIX)**

9. Command Grating Mode 1 (Discrete) **(SBGM1)**

10. Command High Voltage Enable **(SBHVE)**

11. Command High Voltage ON **(SBHVN)**

12. Command Lamp Assembly OPEN **(SBLAO)**

13. Command Cal. Lamp Heater ON **(SBBHN)**

18.9.7 MIRP PROCESSING

MIRP Processing is not applicable to SBUV/2.

18.9.8 POWER INPUT AND PROFILE

The power profile for SBUV/2 is shown in Figure 18.9-13.

18.9.9 ACTIVATION AND EVALUATION (A&E) PROCEDURES AND TIMELINE

Primary power can be applied to the SBUV/2 instrument early in the mission. Care must be taken to insure that high voltage is not enabled during the early phase of the mission. In the past, four days have typically elapsed before the SBUV primary power is applied. After the application of primary power, the "FLEX" memory is loaded and its contents verified. Loading of the memory requires that approximately 560 commands be transmitted to the instrument. This sometimes requires a lot of time due to the fact that other systems onboard the S/C may also require some initialization, especially true if some anomalies are being experienced. Figures 18.9-14 and 18.9-15 identify the memory contents to be loaded and changed during the goniometric and grating calibrations, respectively that occur in the A&E phase of the mission.

Operating Mode	+28V Main Bus		+28V Pulse Load Bus		+28V TLM Bus		+10V Interface Bus	
	AVG (W)	Peak Current (Amps)	AVG (W)	Peak Current (Amps)	AVG (W)	Peak Current (Amps)	AVG (W)	Peak Current (Amps)
Spec Max (normal operation)	17	1.50	(2)	(2) (5)	-	0.010	-	0.010
Grating Mode 1 (Discrete)	6.30	0.24	9.14	0.80	0.10	0.004	0.075	0.008
Grating Mode 2 (Sweep)	6.30	0.24	8.67	0.46	0.10	0.004	0.075	0.008
Grating Mode 3 (3) (Wavelength Cal)	9.52	0.35	9.14	0.80	0.10	0.004	0.075	0.008
Discrete sun Enab (4)	6.30	0.24	9.21	1.145	0.10	0.004	0.075	0.008
Sweep Sun Enab (4)	6.30	0.24	9.18	1.145	0.10	0.004	0.075	0.008
Wavelength Cal Enab (4)	7.50	0.35	9.06	1.145	0.10	0.004	0.075	0.008

NOTE: (1) The typical values were computed from measurements made on the EMU, plus 4.8 W for the Cal Lamp heater which will be on full time whenever the SM baseplate is below 20°C.

(2) The specified orbital average and peak current values are for the combined +28V Main Bus and +28V Pulse Bus power loads. The power dissipation of the decontamination heater on the diffuser and the cal lamp heater initial turn-on transient current are not included in these numbers because they occur only a few times in the mission life.

(3) +28V Main Power includes lamp power; for lamp power off conditions see Mode 1.

(4) Assumes one sequence per orbit with Discrete or Sweep Mode operation for the remainder of the orbit; this is an ordinary worst case condition.

(5) Peak current from turn-on of the cal lamp heater is approximately 2.2 amps.

Figure 18.9-13. SBUV/2 Power Requirements and Typical Values (1).

Group 1	Group 2	Group 3	Group 4	Group 5	Group 6	Group 7
300 Nm	400 Nm	380 Nm	360 Nm	340 Nm	320 Nm	280 Nm
-179	-1589	-1299	-1014	-732	-454	93
1F4D	19Cb	1AED	1C0A	1D24	1E3A	5D
344C	345C	346C	347C	345C	346C	347C
340D	340B	340D	340A	3404	340A	340D
3414	341C	341E	3410	3412	3413	3415
342F	3429	342A	342C	342D	342E	3420
3431	3431	3431	3431	3431	3431	3430

Group 8	Group 9	Group 10	Group 11	Group 12	Group 13
260 Nm	240 Nm	220 Nm	200 Nm	180 Nm	160 Nm
363	630	895	1159	1420	1681
16B	376	37F	487	58C	691
345C	346C	347C	345C	346C	347C
340B	3406	340F	3407	340C	3401
3416	3417	3417	3418	3418	3418
3421	3422	3423	3424	3425	3426
3430	3430	3430	3430	3430	3430

Format:	Group (N)	Group Number
	nnn Nm	Wavelength in Nanometers
	ddd	Decimal Value of Command, Appears on Page SBUV 5 Grating Position
	hhh	Hexidecimal Value of Command, Appears on Page SBUV 6
	344C, 345C, 346C, 347C	Defines the Memory Segment and Word to be Loaded
	340x	Loads Bits 0, 1, 2, 3
	341x	Loads Bits 4, 5, 6, 7
	342x	Loads Bits 8, 9, 10, 11
	343x	Loads Bit 12 (Sign Bit)

The Actual Spacecraft commands are the numbers which start with 34. "CMDST" is required after every 34xx Command.

Figure 18.9-14. Flexible Memory Commands for SBUV FM 3 Goniometric Calibration.

L1 404.385 Nm	L2 333.876 Nm	L3 296.501 Nm	L4 289.084 Nm	L5 253.399 Nm	L6 184.706 Nm
3450	3460	3470	3450	3460	3470
340F	340D	3401	3406	3407	3403
3417	3416	3417	341D	341B	3414
3429	342D	342F	342F	3421	3425
3431	3431	3431	3431	3430	3430
3451	3461	3471	3451	3461	3471
3401	340F	3403	3408	3409	3405
34108	3416	3417	341D	341B	3414
3429	342D	342F	342F	3421	3425
3431	3431	3431	3431	3430	3430
3452	3462	3472	3452	3462	3472
3403	3401	3405	340A	340B	3407
3418	3417	3417	341D	341B	3414
3429	342D	342F	342F	3421	3425
3431	3431	3431	3431	3430	3430
3453	3463	3473	3453	3463	3473
3405	3403	3407	340C	340D	3409
3418	3417	3417	341D	341B	3414
3429	342D	342F	342F	3421	3425
3431	3431	3431	3431	3430	3430
3454	3464	3474	3454	3464	3474
3407	3405	3409	3400	340F	340B
3418	3417	3417	341E	341B	3414
3429	342D	342F	342F	3421	3425
3431	3431	3431	3431	3430	3430
3455	3465	3475	3455	3465	3475
3409	3407	340B	3402	3401	340D
3418	3417	3417	341E	341C	3414
3429	342D	342F	342F	3421	3425
3431	3431	3431	3431	3430	3430
3456	3466	3476	3456	3466	3476
340B	3409	340D	3402	3403	340F
3418	3417	3417	341E	341C	3414
3429	342D	342F	342F	3421	3425
3431	3431	3431	3431	3430	3430
3457	3467	3477	3457	3467	3477
340D	340B	340F	3404	3405	3401
3418	3417	3417	341E	341C	3415
3429	342D	342F	342F	3421	3425
3431	3431	3431	3431	3430	3430
3458	3468	3478	3458	3468	3478
340F	340D	3401	3406	3407	3403
3418	3417	3418	341E	341C	3415
3429	342D	342F	342F	3421	3425
3431	3431	3431	3431	3430	3430
3459	3469	3479	3459	3469	3479
3401	340F	3403	3408	3409	3405
3419	3417	3418	341E	341C	3415
3429	342D	342F	342F	3421	3425
3431	3431	3431	3431	3430	3430
345A	346A	347A	345A	346A	347A
3403	3401	3405	340A	340B	3407
3419	3418	3418	341E	341C	3415
3429	342D	342F	342F	3421	3425
3431	3431	3431	3431	3430	3430

Figure 18.9-15. Flexible Memory Commands for SBUV FM 3 Grating Calibration.

345B	346B	347B	345B	346B	347B
3405	3403	3409	340C	340D	3409
3419	3418	3418	341E	341C	3415
3429	342D	342F	342F	3421	3425
3431	3431	3431	3431	3430	3430

Figure 18.9-15. Flexible Memory Commands for SBUV FM 3 Grating Calibration. (Continued)

The SBUV/2 instruments carry high voltage power supplies which can generate corona. Therefore, a period of time of about three weeks has been defined during which the instrument is allowed to completely "out gas". An additional period of about two weeks has been inserted in the turn on timeline to allow contaminates generated from the local environment to "boil" off and drift away. Following this five week period, the cal lamp door can be opened and initial earth radiance can be measured (if the High Voltage has been commanded "ON").

After the application of high voltage and the cal lamp door has been opened a "Sanity" check of the monochrometer data will be performed in the discrete mode. This data will be compared to some predicted data generated from other instrument databases and a knowledge of the dynamics of global ozone retrieval.

Data from the Cloud Cover Radiometer (CCR) will be reviewed to verify nominal operation of the CCR channel during the monochrometer "sanity" check.

Following the "sanity" checks, the instrument will undergo a grating calibration test. During this test, the grating will be commanded to move in increments of 2 grating positions (approximately .3 nm in displayed wavelength) around the dominate emission lines in the onboard Mercury calibration lamp. The data set generated from this operation will be used to refine the actual grating positions used for Ozone retrieval. This task will require about six days of diligent commanding to complete.
Following the grating calibration period, the instrument will be calibrated for its "Goniometric" response. This is its angular response. During this time, the diffuser will be opened one minute before the Northern terminator and closed 12 minutes after the terminator. The instrument will be commanded into "Position" mode and remain there for one orbit, using position data read from the "FLEX" memory.

After all data has been evaluated, a new set of wavelengths for Ozone and Solar Maximum measurements will be loaded into the flex memory for day to day operations. This will complete the A&E phase of the mission.

Figure 18.9-16 summarizes the post launch timeline for SBUV/2.

L+4, LVPS ON Cal Lamp Heater ON Load/Verify Flex Memory using Grating Cal Test #s Exercise Grating in "Fix" and "Flex" modes Verify Discrete, Position and Sweep Grating Modes	L+21, HV ON Perform Grating Cal In "Dark Orbit" Using Flex Memory	L+35, Open Cal Lamp Door Verify Proper CCR data Load Goniometric #s Perform Goniometric test Collect Day 1 Sweep, Discrete Solar Baseline Values	L+42 Start Normal Data Ops.

Figure 18.9-16. SBUV Activation Timeline.

18.9.10 OPERATIONAL MODES

The SBUV/2 has four operational modes: discrete, sweep, wavelength calibration, and position. Each mode is described in the following paragraphs.

18.9.10.1 Discrete Mode (Mode 1)

The instrument enters Mode 1 upon receipt of proper configuration commands, during which time it views the earth's atmosphere (the majority of data is taken in the configuration), or the sun if the diffuser is so deployed. In this mode, radiometric data is taken at 12 discrete wavelengths, and the program takes 32 seconds to complete. Data continues to be taken in this mode until the instrument is commanded into another mode.

If the grating drive fixed memory is selected, the Discrete Mode wavelengths are preselected. If the flex memory is selected, new wavelengths can be loaded into the memory, and the instrument continues to take data at these wavelengths until the fixed memory is reselected or the instrument is turned off which automatically erases the flex memory.

18.9.10.2 Sweep Mode (Mode 2)

The instrument enters Mode 2 upon receipt of proper configuration commands, during which time the grating sweeps from approximately 400 nm to 160 nm and data is taken in 0.15 nm increments. If this instrument is viewing earth, the scene spectral radiance is being measured. If the diffuser is properly deployed, the instrument is measuring the solar spectral irradiance. The Sweep Mode sequence takes 192 seconds to complete, and the instrument continues to take data in this mode until commanded into another mode. In the fixed memory, the starting position of the sweep is preset at 406 nm. If the flex memory is used, the starting position can be set to any desired wavelength.

18.9.10.3 Wavelength Calibration Mode (Mode 3)

The instrument enters Mode 3 upon receipt of proper configuration commands, during which time the instrument views an outboard Hg lamp source at 12 discrete grating positions bracketing a particular source line. The sequence is identical to Mode 1 in execution taking 32 seconds to complete, and the instrument continues to operate in this mode until commanded into another mode.

18.9.10.4 Position Mode (Mode 4)

The instrument enters this mode upon command, during which time the grating moves to a preselected position and remains there until the instrument is commanded into another mode. The timing of this mode is, therefore, indefinite. Radiometric data is taken continuously as Mode 1.

In Modes 3 and 4, the instrument scans a preselected Hg line or gathers data in a preselected wavelength, respectively, if the fixed memory is selected. If the flex memory is used, a different line or position can be selected.

18.9.11 CALIBRATION REQUIREMENTS

18.9.11.1 In-Flight Measurement of Detector Gain

The SBUV/2 provides in-flight measurement of changes in gain of the detector(s), including the preamplifier stage. The measurements are sensitive enough to determine a gain change of 0.5% or less in the spectral range 300 nm to 340 nm. Averaging 100 measurements is permissible.

18.9.11.2 In-Flight Wavelength Calibration

The SBUV/2 provides the means of in-flight wavelength calibration. The onboard calibration is sensitive enough to detect 0.1 nm shift in the indicated wavelength with a measurement precision of 0.01 nm.

18.9.11.3 Pre-flight Calibration: Ratio of Radiance to Irradiance Accuracy

The ratio of the radiance calibration to irradiance calibration at the same wavelength is determined to an accuracy of 2.35% in the spectral range 200 nm to 250 nm and to an accuracy of 1.53% at 250 nm; 1.57% at 300 nm and 1.82% in the spectral range 340 nm to 400 nm. The ratio is determined from radiance and irradiance measurements made with a minimum time separation; i.e., at each Discrete Mode wavelength, the spectral drive is stopped and both measurements made before continuing. During the time of ratio measurement, the instrument response does not vary by more than 0.5%.

18.9.12 ROUTINE COMMAND REQUIREMENTS

The normal operating mode for SBUV/2 is the discrete mode. To change the mode, send the appropriate Mode command. To enter an automated command sequence, send the operational command desired.

18.9.13 EVALUATION OF NOMINAL PERFORMANCE AND TREND REQUIREMENTS

Nominal performance of the SBUV/2 is determined by reviewing the analog telemetry data and verifying that the data falls within the ranges identified in Figure 18.9-5.

18.9.14 CONSTRAINTS

18.9.14.1 General

The following are general constraints:

The depolarizer temperature must be maintained at greater than -10°C and less than +40°C.

The instrument temperature as measured at the spacecraft interface, must be maintained to the following:

- Greater than or equal to 0°C and less than or equal to +30°C for in-spec. operation.
- Greater than -10°C and less than +40°C for survival.

When the instrument is off:

- The diffuser must be stowed.
- The calibration lamp housing must be closed.
- High voltage must be inhibited.

18.9.14.2 Pre-launch Phase

a. Contamination covers must remain in place on the Sensor Module for testing.

b. The Sensor Module must be continually purged with dry N_2 (whose cleanliness has been previously verified).

c. Personnel working around the Sensor Module, particularly when the contamination covers are removed, must wear clean gloves, hoods, and facemasks. During the brief periods when the covers are removed while the instrument is mounted on the spacecraft, no work shall be done above the SBUV/2.

d. The carbon filter must be installed on the purge line intake during spacecraft T/V testing and when the spacecraft is in its shipping container.

18.9.14.3 Launch Phase

a. Verify that dust covers are removed prior to launch.

b. Verify that the diffuser is stowed and the calibration lamp housing closed over the entrance aperature. The SBUV/2 must be off for launch.

c. Verify that the carbon filter has been removed.

d. Verify that the purge line cap is installed on the purge system intake.

18.9.14.4 Activation Phase

See Section 18.9.9.

18.9.14.5 Operational Phase

After the SBUV instrument has completed the grating and goniometric calibration portion of the A&E phase and the data has been reviewed, it is ready for the operational phase of the mission. The instrument is configured for the operational phase by loading the "Flex" memory with data derived from the A&E phase.

The first two segments (segment 0 and 1) of the "Flex" memory will be loaded with grating commands which correspond to the desired discrete Ozone retrieval wavelengths. Segments 2 and 3 of the "Flex" memory will be loaded with grating values which correspond to those wavelengths needed for solar spectral data.

The instrument will be commanded to execute the following schedule (as shown in Figure 18.9-17):

1. Daily Discrete Mode data collection using Flex memory Segment 0.
2. Sweep mode radiance measurements once per month.
3. Solar Sweep data collection once per day.
4. Discrete Mode Solar data collection once per week.
5. Discrete Mode Solar (Magnesium II wavelengths) using Flex memory Segment 3.
6. Position Mode data collection once per month at 252, 302, 340, and 400 nm.

7. Wave cal enable internal mode 2 times per week.

Week # (Mod 4)	Sunday	Monday	Tuesday	Wednesday	Thursday	Friday	Saturday
0	SMRO	SMSO DMSO DMSM DMRO	SMSO WLC DMSM DMRO	SMSO DMSM DMRO	SMSO WLC DMSM DMRO	SMSO DMSM DMRO	SMSO DMSM DMRO
1	SMSO DMSM DMRO	SMSO DMSO DMSM DMRO	SMSO WLC DMSM DMRO	SMSO DMSM DMRO	SMSO WLC DMSM DMRO	SMSO DMSO DMRO	SMSO DMSM DMRO
2	SMSO DMSM PMW0 DMRO	SMSO DMSO DMSM PMW1 DMRO	SMSO WLC DMSM PMW2 DMRO	SMSO DMSM PMW3 DMRO	SMSO WLC DMSM DMRO	SMSO DMSM DMRO	SMSO DMSM DMRO
3	SMSO DMSM DMRO	SMSO DMSO DMSM DMRO	SMSO WLC DMSM DMRO	SMSO DMSM DMRO	SMSO WLC DMSM DMRO	SMSO DMSM DMRO	SMSO DMSM DMRO

SMRO - Sweep Mode Radiance Observations
SMSO - Sweep Mode Solar Observations
DMSO - Discrete Mode Solar Observations
WLC - Wavelength Cal
DMSM - Discrete Mode Solar Magnesium
DMRO - Discrete Mode Radiance Observations
PMW(0-4) - Position Mode Wavelength

Figure 18.9-17. SBUV Operational Daily Schedule

The required commands to configure the SBUV for the operational phase are tabulated as follows:

Sweep Mode Radiance Observations (SMRO)

This measurement mode is executed once per month for one full day. Grating is in the "Sweep" mode.

Sweep Mode Solar Observation (SMSO)

One measurement per day starting when the Sun is visible on the diffuser and ending when the Sun drops over the horizon.

Discrete Mode Solar Observations (DMSO)

One measurement per week starting when the Sun is visible on the Diffuser and ending when the Sun drops over the horizon. Grating control is the same as DMRO (below), i.e. Discrete grating mode "Flex" segment 0.

Discrete Mode Solar Magnesium (DMSM)

One measurement per day starting when the Sun is visible on the diffuser and ending when the Sun drops over the horizon using "Flex" memory Segment 2 for grating control.

Discrete Mode Radiance Observations (DMRO)

This is the primary SBUV mode. The instrument shall be in this mode when not in any other mode. Grating control come from "Flex" memory Segment 0.

Position Mode Wavelength 0, 1, 2 and 3 (PMW[Ø, 1, 2, 3])

Once measurement every four weeks in this mode. Grating control comes from Segments 0, 1, 2 and 3 respectively.

Wavelength Cal (WLC)

This is the SBUV internal Wavelength Cal sequence performed 2 times per week.