MICROWAVE HUMIDITY SOUNDER
(MHS)
FLIGHT OPERATIONS MANUAL

MHS-OM-JA215-MMP

5

MHS Flight Ops. Manual (Astrium)

Author:	*G Sykes*	*Date:*	*16-9-02*
Product Assurance	*L Burton*	*Date:*	*16-9-02*
Project Manager	*I Stewart*	*Date:*	*16-9-02*

© Astrium Ltd 2003

Astrium Ltd owns the copyright of this document which is supplied in confidence and which shall not be used for any purpose other than that for which it is supplied and shall not in whole or in part be reproduced, copied, or communicated to any person without written permission from the owner.

Astrium Ltd
Anchorage Road, Portsmouth, Hampshire, PO3 5PU, England

INTENTIONALLY BLANK

Astrium Ltd owns the copyright of this document which is supplied in confidence and which shall not be used for any purpose other than that for which it is supplied and shall not in whole or in part be reproduced, copied, or communicated to any person without written permission from the owner.

CONTENTS

1. SCOPE 7

2. APPLICABLE AND REFERENCE DOCUMENTS 8

2.1 APPLICABLE DOCUMENTS 8
2.2 REFERENCE DOCUMENTS 8
2.3 ABBREVIATIONS AND ACRONYMS 8
2.4 NUMBER NOTATIONS 10

3. INSTRUMENT DESCRIPTION 11

3.1 MISSION REQUIREMENTS 11
3.2 FUNCTIONAL DESCRIPTION 11
3.3 DESIGN DESCRIPTION 15

4. MHS OPERATION 18

4.1 MODES OF OPERATION 18
4.2 SCAN CONTROL 32
4.3 RADIOMETRIC DATA ACQUISITION 35
4.4 FAULT HANDLING 35
4.5 REDUNDANCY HANDLING 37
4.6 MHS INSTRUMENT ON-BOARD SOFTWARE (MINOS) 38
4.7 POWER CONSUMPTION 39
4.8 SOFTWARE PARAMETER TABLES 41

5. COMMISSIONING AND INITIALISATION 44

5.1 LAUNCH AND EARLY ORBIT PHASE 44
5.2 COMMISSIONING 44
5.3 INSTRUMENT INITIALISATION 44

6. INSTRUMENT COMMAND, TELEMETRY AND DATA INTERFACES 49

6.1 INTRODUCTION 49
6.2 POWER BUS CONTROL 51
6.3 SAFE COMMAND 53
6.4 MAIN BUS STATUS 53
6.5 SURVIVAL THERMISTOR TELEMETRY 53
6.6 MIL-STD 1553 BUSES 53
6.7 INTERNAL COMMANDS 73
6.8 INTERNAL TELEMETRY 79

7. ROUTINE OPERATIONS 84

7.1 INTRODUCTION 84
7.2 PROCEDURE P100 : OFF MODE TO SCAN MODE 87
7.3 PROCEDURE P101 : OFF MODE TO SCAN MODE (WITH AUTOMATIC MODE TRANSITIONS) 89
7.4 PROCEDURE P110 : SCAN MODE TO OFF MODE 91
7.5 PROCEDURE P200 : ANY MODE TO SAFEING MODE 92
7.6 PROCEDURE P201 : POWER-ON MODE TO OFF MODE 93
7.7 PROCEDURE P210 : OFF MODE TO POWER-ON MODE 94
7.8 PROCEDURE P211 : POWER-ON MODE TO WARM-UP MODE 97
7.9 PROCEDURE P212 : WARM-UP MODE TO STANDBY MODE 100

Astrium Ltd owns the copyright of this document which is supplied in confidence and which shall not be used for any purpose other than that for which it is supplied and shall not in whole or in part be reproduced, copied, or communicated to any person without written permission from the owner.

7.10 PROCEDURE P213 : STANDBY MODE TO SCAN MODE 104
7.11 PROCEDURE P214 : SCAN / FIXED VIEW MODE TO STANDBY MODE 106
7.12 PROCEDURE P215 : STANDBY MODE TO FIXED VIEW MODE 108
7.13 PROCEDURE P216 : STANDBY MODE TO POWER-ON MODE 110
7.14 PROCEDURE P300 : LOAD TABLE PARAMETERS (EM) 112
7.15 PROCEDURE P301 : LOAD TABLE PARAMETERS (PFM) 116
7.16 PROCEDURE P302 : LOAD TABLE PARAMETERS (FM2) 119
7.17 PROCEDURE P303 : LOAD TABLE PARAMETERS (FM3) 123
7.18 PROCEDURE P304 : LOAD TABLE PARAMETERS (FM4) 126
7.19 PROCEDURE P305 : TIMECODE PATCH 130
7.20 PROCEDURE P310 : CHANGE FIXED VIEW POSITION (ABSOLUTE) 133
7.21 PROCEDURE P311 : CHANGE FIXED VIEW POSITION (RELATIVE) 135
7.22 PROCEDURE P320 : LOAD TABLE DATA 137
7.23 PROCEDURE P321 : READ TABLE PARAMETERS 139
7.24 PROCEDURE P330 : GAIN AND DC OFFSET INITIALISATION / OPTIMISATION 141
7.25 PROCEDURE P331 : SETTING OF RX GAINS 149
7.26 PROCEDURE P410 : GENERATE STATUS REPORT 153
7.27 GENERAL OPERATIONAL CONSTRAINTS 156
7.28 GENERAL LIFETIME CONSTRAINTS 157

8. SPECIAL PROCEDURES 158

8.1 INTRODUCTION 158
8.2 PROCEDURE P999 : EMERGENCY SWITCH OFF 159
8.3 PROCEDURE P900 : FAULT MODE TO POWER-ON MODE 161
8.4 PROCEDURE P810 : PROCESSOR FUNCTIONS SELF-TEST 163
8.5 PROCEDURE P811 : TMTC FUNCTIONS SELF-TEST 165
8.6 PROCEDURE P812 : MEMORY SELF-TEST 167
8.7 PROCEDURE P813 : FIXED PATTERN SELF-TEST 169
8.8 PROCEDURE P814 : RDM MOTOR SCAN PROFILE SELF-TEST 171
8.9 PROCEDURE P815 : FDM MOTOR SCAN PROFILE SELF-TEST 178
8.10 PROCEDURE P720 : READ MEMORY 182
8.11 PROCEDURE P721 : WRITE MEMORY 184
8.12 PROCEDURE P400 : INSTRUMENT PERFORMANCE CHECKOUT 186

LIST OF FIGURES

Figure 3.2-1 Instrument Functional Diagram 13
Figure 3.3-1 Instrument Isometric View 17
Figure 4.1-1 MHS Modes and Mode transitions 19
Figure 4.1-2 Survival and Operational Heater status 23

Astrium Ltd owns the copyright of this document which is supplied in confidence and which shall not be used for any purpose other than that for which it is supplied and shall not in whole or in part be reproduced, copied, or communicated to any person without written permission from the owner.

LIST OF TABLES

Table 4.1-1 Equipment Status for MHS Instrument Modes (1/2) 20
Table 4.1-1 Equipment Status for MHS Instrument Modes (2/2) 21
Table 4.1-2 Output Data for MHS Instrument Modes 22
Table 4.7-1 Power Consumption versus Mode of Operation 40
Table 5.3-1 Initialisation of Software Parameters 48
Table 6.2-1 Power Bus On/Off Configurations 52
Table 6.6.1-1 Packet Datation 55
Table 6.6.2.2-1 CT Bus Command Packets 57
Table 6.6.2.2-1 CT Bus Command Legality 58
Table 6.6.2.3-1 CT Bus Telemetry Packets 61
Table 6.6.2.3.1-1 Summary of HK Packet Format 61
Table 6.6.2.3.1-2 Summary of Telemetry Parameters in an HK Packet 62
Table 6.6.2.3.2-1 Summary of Test Data Packet Format 63
Table 6.6.2.3.3-1 Summary of Test Data Packet Format 63
Table 6.6.3.2-1 SD Bus Command Packets 65
Table 6.6.3.2-2 SD Bus Command Validity 65
Table 6.6.3.3-1 Science Data Bus Packets 67
Table 6.6.3.3.1-1 Summary of SD Packet Format 68
Table 6.6.3.3.1-2 Summary of Telemetry Parameters in a SD Packet 71
Table 6.6.3.3.2-1 Summary of Extended Test Data Packet Format 72
Table 6.6.3.3.3-1 Summary of Extended Memory Data Packet Format 72
Table 6.7.1-1 High Level Command List 75
Table 6.7.2-1 Steady State Command List 76
Table 6.7.3-1 BIM Register Command List 78
Table 6.8.1-1 Switch Status Telemetry List 79
Table 6.8.2-1 Bilevel Status Telemetry List 80
Table 6.8.3-1 BIM Register Status Telemetry List 81
Table 6.8.4-1 Thermistor Telemetry List 82
Table 6.8.5-1 Analogue Telemetry List 83
Table 6.8.6-1 PRT Telemetry List 83

APPENDICES

Figure A1 Receiver Power Switching and LO Redundancy Selection Command/Telemetry Diagram 188
Figure A2 Rx Gain, DC Offset and SPE Redundancy Command/Telemetry Diagram 189
Figure A3 Scan Control Command/Telemetry Diagram 190
Figure A4 Power Distribution Command/Telemetry Diagram 191
Figure A5 Temperature Telemetry Diagram 192

Astrium Ltd owns the copyright of this document which is supplied in confidence and which shall not be used for any purpose other than that for which it is supplied and shall not in whole or in part be reproduced, copied, or communicated to any person without written permission from the owner.

INTENTIONALLY BLANK

Astrium Ltd owns the copyright of this document which is supplied in confidence and which shall not be used for any purpose other than that for which it is supplied and shall not in whole or in part be reproduced, copied, or communicated to any person without written permission from the owner.

1. SCOPE

This document describes the operational procedures and operational constraints applicable to the MHS Instrument.

Note that this document describes the operation of the MHS Instrument developed by Astrium Ltd under contract with EUMETSAT (sometimes referred to as the 'MHS Sensor'). It does not cover the operation of the combination of the MHS Sensor and its dedicated platform interface unit (eg. 'MHS Sensor + MIU' on NOAA, 'MHS Sensor + MPU' on METOP).

This document will use the terms 'MHS Instrument', 'Instrument' or 'MHS' to refer to the MHS Sensor. Platform interface units (ie. MIU or MPU) will be referred to as 'platform'.

Sections 3 to 5 are general descriptions provided to aid understanding of the procedures.

Sections 6 to 8 are reference sections which provide detailed information and procedures.

Section 3 is a brief description of the Instrument hardware and their functions. This will aid the understanding of the detailed Instrument operations.

Section 4 is a detailed description of the operation of the Instrument. The Instrument is very versatile and can be configured and operated in many ways. This section is not a definition of specific operational procedures but a description of all the capabilities of the Instrument. It will aid the understanding of the operational procedures described in sections 8 and 9 and enable additional procedures to be proposed, should the need arise. Any procedures not defined in this document shall be approved by Astrium Ltd prior to their execution.

Section 5 is a summary of the commissioning and initialisation operations.

Section 6 is a complete definition of all external and internal commands, telemetry and scientific data.

Section 7 defines the procedures for routine operations. It is not possible to define procedures for all the Instrument configurations and mission scenarios due to the Instrument's versatility. Any procedures not defined in this document shall be approved by Astrium Ltd prior to their execution.

Section 8 defines the procedures for special operations such as testing, diagnostics and fault recovery.

Astrium Ltd owns the copyright of this document which is supplied in confidence and which shall not be used for any purpose other than that for which it is supplied and shall not in whole or in part be reproduced, copied, or communicated to any person without written permission from the owner.

2. APPLICABLE AND REFERENCE DOCUMENTS

2.1 Applicable Documents

The following documents, at the latest issue unless otherwise stated, form part of the present specification to the extent specified.

In the event of conflict between this document and the content of other applicable documents, the applicable document shall take precedence. Astrium Ltd should be notified of any such conflicts immediately after their discovery.

AD1	MHS-TN-JA063-MMP	MHS TM-TC and Science Data Format Directory
AD2	MHS-TN-JA137-MMP	MHS Housekeeping Telemetry Conversion to Engineering Units

2.2 Reference Documents

RD1	***MHS-TN-JA359-MMP***	***MHS Timecode Patch Technical Note***
RD2	***MHS-TR-JA355-MMP***	***MHS Timecode Patch Verification Test Procedure***

2.3 Abbreviations and Acronyms

ADC	Analogue-to-digital converter
AMSU-A	Advanced Microwave Sounding Unit A
ASIC	Application Specific Integration Circuit
Aux	Auxiliary (refers to redundant Rx heaters)
BIC	BIM Controller, an ASIC which forms part of the VPM
BIM	Inter Module Bus, the EE backplane bus
CCSDS	Consultative Committee for Space Data Systems, a packet format standard
CK	Clock
CPU	Central Processing Unit
CT, Cmd/Tlm	Command / Telemetry 1553 Bus
CV	Converter (DC/DC)
DAC	Digital-to-analogue converter
DC	(1) Direct Current, (2) Down Converter, part of Rx
DC1..5	Downconverter channels 1, 2, 3/4, 5, part of Rx
DOT	DC Offset Table, a MINOS parameter table
EDAC	Error Detection and Correction, part of VPM
EE	Electronics Equipment
ESA	European Space Agency
EUMETSAT	European Organisation for the Exploitation of Meteorological Satellites
FDM	Flywheel Drive Module, part of SM
FOV	Field of view
F/W	Firmware (start-up software for VPM)
HK	Housekeeping (eg. HK TLM Packet)
HL	High Level (refer to 16V pulsed relay signals)
H/W	Hardware
H1, H2..H5	The Rx radiometric channels
ICT	Instrument Configuration Table. part of MINOS
IF	Intermediate Frequency

Astrium Ltd owns the copyright of this document which is supplied in confidence and which shall not be used for any purpose other than that for which it is supplied and shall not in whole or in part be reproduced, copied, or communicated to any person without written permission from the owner.

IFBE	Intermediate Frequency and Back End Assembly, part of Rx
LNA1..5	Low Noise Amplifiers 1, 2, 3/4, 5, part of Rx
LO	Local Oscillator (also known as QBS), part of Rx
METOP	European Satellite for Operational Meteorology
MHS	Microwave Humidity Sounder
MINOS	MHS Instrument On-board Software
MIU	MHS Interface Unit, the NOAA equipment which interfaces to MHS
MOSFET	Metal Oxide Semiconductor Field Effect Transistor
Mux	Multiplexer
NOAA	National Oceanic and Atmospheric Administration
OBCT	On-board Calibration Target
OP	Operational (refers to heaters)
PCC	Processor Companion Chip, an ASIC which forms part of the VPM
PIE	Processor and Interface Electronics
PROM	Programmable Read Only Memory
PRT	Platinum Resistance Thermometer
PSE	Power Supply Electronics, part of EE
QBS	Q-band Source, part of Rx
QOFEA	Quasi-optic Front-end Assembly, part of Rx
RAM	Random Access Memory
RDM	Reflector Drive Module, part of SM
REF	Reference (refers to Reference Clock)
RFCV	DC/DC Converter which supplies the Receiver
Rx	Receiver
SCE	Scan Control Electronics, part of EE
SCT	Scan Control Table, a MINOS parameter table
SD	Science Data (eg. SD Packet)
SDA	Scan Drive Amplifier, part of SCE
SM	Scan Mechanism
SSHM	Scan Sensor Head Module, part of SM
SSI	Scan Sensor Interface, part of SCE
SPE	Signal Processing Electronics, part of EE
SPE1..SPE6	SPE channels 1 to 6
S/W	Software
TBC	To be confirmed
TBD	To be determined
TC	Telecommand
TIROS	Television Infra-red Observation Satellite
TLT	Telemetry Limits Table, a MINOS parameter table
TM, TLM	Telemetry
VPM	Versatile Processor Module, the main processor in the EE
WD	Watchdog, a fault detection function of the VPM
8SP	8 second Synchronisation Pulse

Astrium Ltd owns the copyright of this document which is supplied in confidence and which shall not be used for any purpose other than that for which it is supplied and shall not in whole or in part be reproduced, copied, or communicated to any person without written permission from the owner.

2.4 Number Notations

The dollar symbol is used to denote hexadecimal format, eg:-

$A = 10 decimal , $100 = 256 decimal, $FFFF = 65535 decimal

Astrium Ltd owns the copyright of this document which is supplied in confidence and which shall not be used for any purpose other than that for which it is supplied and shall not in whole or in part be reproduced, copied, or communicated to any person without written permission from the owner.

3. INSTRUMENT DESCRIPTION

3.1 Mission Requirements

The Microwave Humidity Sounder (MHS) is a 5 channel self-calibrating microwave radiometer. MHS, together with the complementary instrument AMSU-A, provides the operational microwave sounding capability for future European (METOP) series and American (NOAA-N onwards) meteorological satellites.

MHS is being procured by EUMETSAT to be flown on the following spacecraft:

a. Two spacecraft of the existing NOAA Advanced TIROS-N series (NOAA N, N')

b. The EUMETSAT/ESA series of polar orbiting meteorological spacecraft (METOP)

c. The future NOAA series of spacecraft (post NOAA-N, N') starting with NOAA-O

The instrument is interchangeable between these three spacecraft.

MHS has channels in the 89-190 GHz range. Channels at 157 GHz and around 183 GHz provide a humidity profile sounding capability, while the 89 GHz channel provides information on surface temperature and emissivity (in conjunction with AMSU-A window channels) and detects cloud and precipitation contaminated pixels.

3.2 Functional Description

The MHS instrument is based upon an offset paraboloid reflector which is mechanically scanned to provide earth scene, on-board target and cold space views (the latter two for calibration). The scan motion is fully compensated by a counter rotating motor driven flywheel. The reflector illuminates feeds at 89, 157, 183 and 190 GHz via a quasi optical arrangement of lenses, dichroic plates and a polariser,

The scientific data generated by MHS is output to the platform on a data bus using CCSDS packet formats. Instrument command, control and telemetry functions are achieved using a separate data bus, also using CCSDS packet formats.

The instrument functional block diagram is presented in Figure 3.2-1 and the main functions of the instrument are described below.

Scan Control

A scan mechanism consisting of two motors with their associated drive electronics supports a single reflector assembly and performs the scanning of the instrument field of view across the Earth, an on-board hot calibration target and cold space for instrument calibration, every 2.67 seconds. One of the motors drives a compensating flywheel providing momentum compensation to limit the perturbations introduced on the attitude of the satellite by the scan motion. The scan profile is optimised for maximum radiometric sensitivity.

Astrium Ltd owns the copyright of this document which is supplied in confidence and which shall not be used for any purpose other than that for which it is supplied and shall not in whole or in part be reproduced, copied, or communicated to any person without written permission from the owner.

Microwave signal reception

The MHS instrument is a microwave total power radiometer with five measurements channels called H1 to H5 at respectively 89 GHz, 157 GHz, 183.3 GHz, 183.3 GHz, 190.3 GHz centre frequencies.

The reflector driven by the scan mechanism directs the RF signal to a quasi optical assembly. This assembly splits the signal according to the frequency and required polarisation. H1, H2 and H5 channels have separate feeds whereas H3 and H4 are combined on the same feed.

Signal detection

The microwave signal at the output of each feed is down converted to Intermediate Frequency (IF) using a superheterodyne receiver consisting of one mixer (fundamental for H1, sub-harmonic for other channels) with its associated local oscillators (nominal + redundant), amplifiers, a diplexer for H3/H4, a filter section and video detection. This generates five baseband signals.

Signal Processing

The detected baseband signals are filtered and the DC component (corresponding to the receiver noise level) removed. The signal is then digitised and a digital accumulation over each pixel integration period performed. The final pixel result is formatted into a packet along with the calibration data to constitute the scientific data to be used on the ground.

Instrument control and telemetry

A processor controls and monitors the instrument operation and the scan position and velocity. Associated electronics provide the electrical interface with the platform and generate the secondary supplies necessary for the instrument equipments.

On-board calibration target (OBCT)

As identified above, a "hot target" is scanned every 2.67 seconds and provides a hot reference temperature for instrument calibration. This target consists of an array of pyramids coated with RF absorbing material. It is passively controlled at ambient to obtain a uniform temperature over the surface. This temperature is accurately measured and used for on-ground processing of the radiometric data.

Structure and thermal control

All four MHS equipments, namely scan mechanism assembly, receiver, electronics and on board calibration target are mounted onto a single structural baseplate which ensures the mechanical interface with the platform.

Passive thermal control is employed for MHS, using a combination of thermal insulation and radiative surfaces. "Cold" surfaces are specifically used for dissipating the power of the receiver and the electronics equipment. Heaters are provided to speed up the warm-up time of the instrument from switch-on. Survival heaters are provided to maintain safe temperatures when the instrument is off.

Astrium Ltd owns the copyright of this document which is supplied in confidence and which shall not be used for any purpose other than that for which it is supplied and shall not in whole or in part be reproduced, copied, or communicated to any person without written permission from the owner.

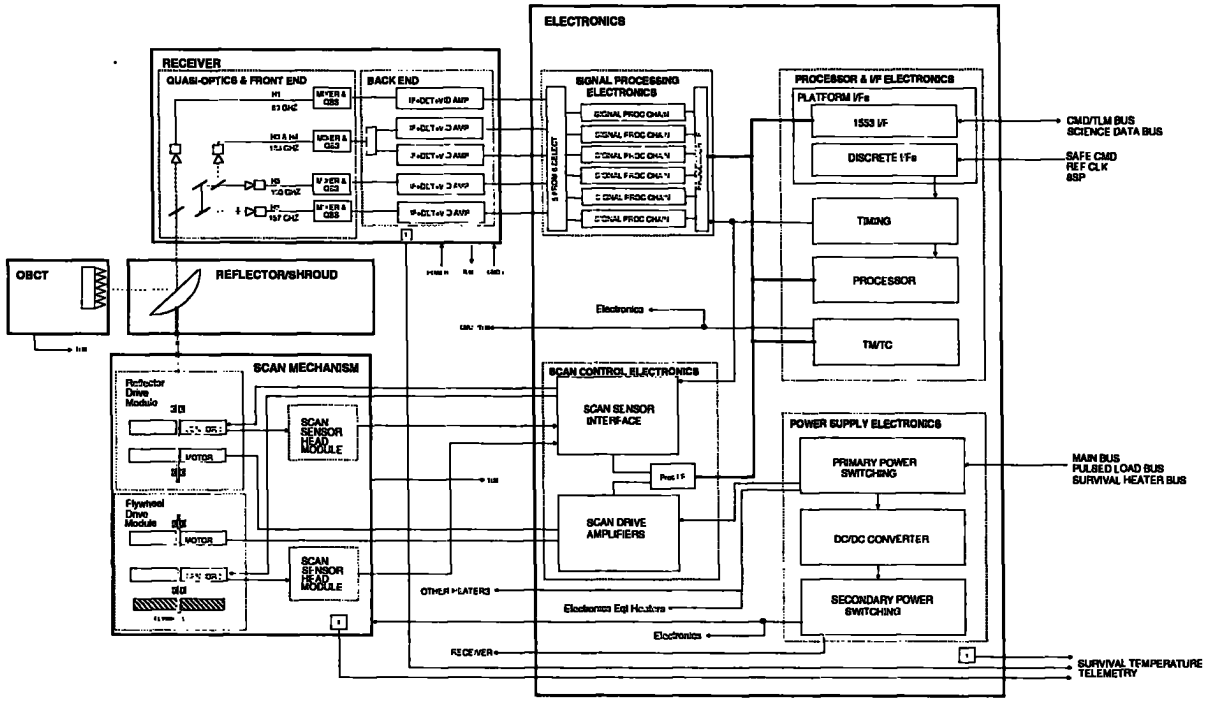

Figure 3.2-1 Instrument Functional Diagram

Astrium Ltd owns the copyright of this document which is supplied in confidence and which shall not be used for any purpose other than that for which it is supplied and shall not in whole or in part be reproduced, copied, or communicated to any person without written permission from the owner.

INTENTIONALLY BLANK

Astrium Ltd owns the copyright of this document which is supplied in confidence and which shall not be used for any purpose other than that for which it is supplied and shall not in whole or in part be reproduced, copied, or communicated to any person without written permission from the owner.

3.3 Design Description

Figure 3.3-1 shows an isometric view of the Instrument.

The MHS Instrument consists of 3 major equipments:-

Receiver (Rx)
This equipment can be further divided into two sections:-

- Quasi-Optics and Front-End Assembly (QOFEA) : consists of the mirrors, lenses, polarisors and horns of the quasi-optics; and the Q-band sources (QBSs), mixers, LNAs and Down-Converters (DCs)
- IF Back-End (IFBE) functions : consists of IF filters, detector diodes and programmable gain baseband amplifiers. It also includes a relay switch network to allow independent on/off control of the Rx channels.

Scan Mechanism (SM)
This provides a motor to drive the Reflector (Reflector Drive Module, RDM) and a second motor to drive the momentum compensation flywheel (Flywheel Drive Module, FDM). Each motor has an Inductosyn angular position sensor with an associated preamplifier module (Scan Sensor Head Module, SSHM) mounted close to the motors.

Electronics Equipment (EE)
This consists of 11 circuit modules providing the following functions:-

- Processor and Interface Electronics (PIE) (5 modules)
  This provides the processor, PROM and RAM which executes the MHS Instrument On-board Software (MINOS). It also provides interfaces to the platform and to the other MHS equipments. The software decodes commands from the platform, initiates internal commands to the equipments, gathers telemetry, gathers scientific data, formats data into packets and outputs them to the platform. It also implements the scan control algorithms used to control the Reflector and Flywheel positions. The PIE has full cold redundancy.

- Signal Processing Electronics (SPE) (1 module)
  This accepts the baseband signals from the Receiver and generates a digitised result for each image pixel and each channel. It performs filtering, dc bias removal, digitisation and digital integration. There is one signal processing chain for each Receiver channel, plus one redundant chain which can replace any of the other five chains.

- Scan Control Electronics (SCE) (2 modules)
  This provides the interfaces to the motors and sensors of the Scan Mechanism. The Scan Drive Amplifiers (SDAs) accept a torque demand from the processor and generate the required current in the 3-phase motor windings. The Scan Sensor Interface provides the necessary signals for the Inductosyn position sensors and the hall-effect zero position sensors and generates a digital output representing the angular position of the motor.

- Power Supply Electronics (PSE) (2 modules)
  This provides two DC/DC converters to generate secondary supplies for the PIE+SPE+SCE functions and the Rx functions respectively. It also provides primary power switching for bus redundancy selection and heater power, and secondary power on/off switching.

Astrium Ltd owns the copyright of this document which is supplied in confidence and which shall not be used for any purpose other than that for which it is supplied and shall not in whole or in part be reproduced, copied, or communicated to any person without written permission from the owner.

- Spare Module (1 Module)

This module is empty.

The instrument also has the following minor equipments/assemblies:-

- On-Board Calibration Target (OBCT)
- Reflector and Shroud assembly
- Motor Bracket and sunshield
- Thermal hardware (thermistors, thermostats and heaters)
- Instrument Baseplate

Astrium Ltd owns the copyright of this document which is supplied in confidence and which shall not be used for any purpose other than that for which it is supplied and shall not in whole or in part be reproduced, copied, or communicated to any person without written permission from the owner.

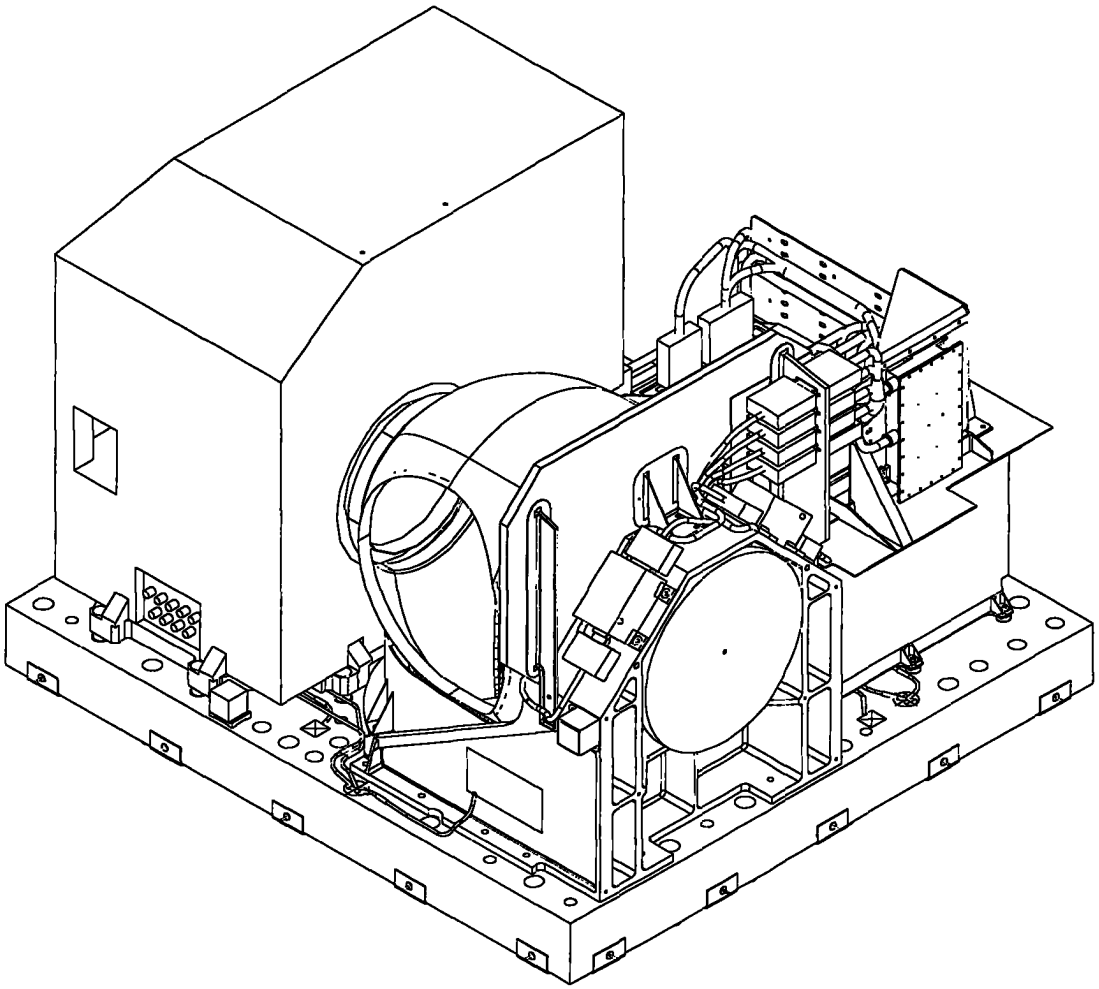

Figure 3.3-1 Instrument Isometric View

Astrium Ltd owns the copyright of this document which is supplied in confidence and which shall not be used for any purpose other than that for which it is supplied and shall not in whole or in part be reproduced, copied, or communicated to any person without written permission from the owner.

4. MHS OPERATION

This section gives a detailed description of how the MHS operates. It does not give specific procedures, but describes all the possible modes of operation and functions which are available to the user. Sections 7 and 8 define specific procedures which will cover all the normal in flight operation of the Instrument. However, they do not use all the features described in this section. If the user wishes to use additional features then new procedures may be generated based on the information in this section. Astrium Ltd shall approve all new procedures before they are used in-flight.

4.1 Modes of Operation

The overall control of the MHS Instrument is performed through operation in the modes described in the following sections. The status of the MHS Instrument in the various modes and the transitions between modes are controlled by the MHS Instrument Onboard Software (MINOS).

Figure 4.1-1 shows the flow between modes and the stimuli that cause the mode changes.

Table 4.1-1 shows the status of the MHS Instrument equipments in different modes. Table 4.1-2 shows the telemetry and science data output for different modes.

Figure 4.1-2.shows the status of survival and operational heaters during various modes.

Astrium Ltd owns the copyright of this document which is supplied in confidence and which shall not be used for any purpose other than that for which it is supplied and shall not in whole or in part be reproduced, copied, or communicated to any person without written permission from the owner.

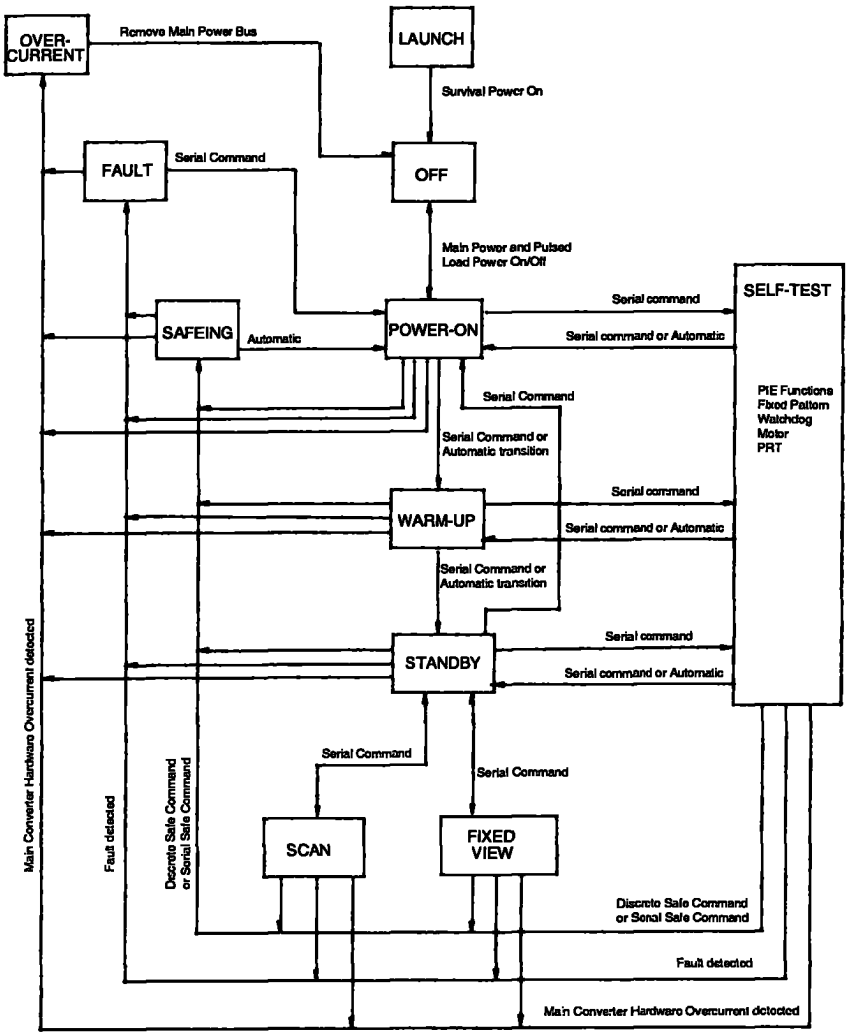

Figure 4.1-1 MHS Modes and Mode transitions

Astrium Ltd owns the copyright of this document which is supplied in confidence and which shall not be used for any purpose other than that for which it is supplied and shall not in whole or in part be reproduced, copied, or communicated to any person without written permission from the owner.

MHS INSTRUMENT STATUS (Note 1)								
MODE	PIE	SCE SPE SSHM	Receiver	Motor Drive	Rx Op Heaters	SM Op Heaters	Aux Op Heaters	Survival Heaters
LAUNCH	OFF	OFF	OFF	OFF	OFF	OFF	OFF	ON
OFF	OFF	OFF	OFF	OFF	OFF	OFF	OFF	ON
POWER-ON	ON	OFF (note13)	***OFF /ON (note 8)***	OFF	ON	ON	note 15	OFF
WARM-UP	ON	ON	ON	OFF	OFF	ON	note 15	OFF
STANDBY	ON	ON	ON	ON	OFF	OFF/ON (note 4)	note 15	OFF
SCAN	ON	ON	ON	ON	OFF	OFF	note 15	OFF
FIXED VIEW	ON	ON	ON	ON	OFF	OFF/ON (note 4)	note 15	OFF
SELF-TEST	ON	ON	ON/OFF (note 5)	ON/OFF (note 5)	OFF/ON (note 3)	OFF/ON (note 4)	note 15	OFF
SAFEING	ON	ON	OFF	OFF (note 7)	ON	ON	note 15	OFF
FAULT (note 10,11)	ON	ON (note 2)	OFF	OFF (note 7)	ON	ON	note 15	OFF (note 2)
OVERCURRENT	OFF	OFF	OFF	OFF	OFF	OFF	note 15	OFF (note 6)

Note 1 The table shows the status after completion of the mode transition.

Note 2 In case of the following causes, the SPE/SCE/SSHM functions are turned OFF:-

- 5V current monitor (supplies EE & SM sensors)
- SM temperature (including SSHM temperature, as monitored by 'Structure' thermistors)
- EE temperature

In this case, the platform will monitor the MHS Instrument temperatures (via serial TM and Survival Thermistor TM). The EE has no operational heaters and switch-on/survival temperature cannot be guaranteed if part of the EE is switched off. If operating temperatures are not maintained, the platform must switch off the MHS Instrument and ensure Survival Power is on so that the MHS Survival Heaters can maintain temperatures.

Note 3 When the Rx is OFF, the Rx Operational Heaters are either ON or OFF, under control of the software on the basis of Receiver thermistor telemetry.

Note 4 When the Motor Drive is under fixed position control, the processor controls the SM Operational Heaters as necessary because the motor power dissipation is very low.

Note 5 Depends on previous (ie. calling) mode and type of test performed.

Note 6 In this non-nominal mode, the platform must manage the power buses to achieve thermal control using Survival Thermistor Telemetry and Survival Heaters.

Note 7 The Reflector is parked at the OBCT before turning OFF the Motor Drive for Safeing Mode and the following causes of Fault Mode: RFCV H/W trip, RFCV current monitor, Rx & Structure (not SSHM) temperature monitors.

Notes continued on next page

Table 4.1-1 Equipment Status for MHS Instrument Modes (1/2)

Astrium Ltd owns the copyright of this document which is supplied in confidence and which shall not be used for any purpose other than that for which it is supplied and shall not in whole or in part be reproduced, copied, or communicated to any person without written permission from the owner.

Note 8 The Rx and RFCV are OFF on entry to this mode ***(except for entry from Standby),*** but the RFCV (within the EE) will nominally be switched ON by telecommand soon after entry to this mode.

Note 9 deleted

Note 10 The causes of a transition into FAULT MODE are:-

- RFCV H/W trip
- RFCV current (8V,±15V) TLM out of 'Fault Limits'
- EE/SM current (+5V) TLM out of 'Fault Limits'
- RDM/FDM current (28V) TLM out of 'Fault Limits'
- RX/SM/EE/Structure temperature TLM out of 'Fault Limits'
- Switch status telemetry error
- Loss of Platform REF CK (and therefore Scan Control Clock).
- Failure to initialise Zero Position Sensors

(Note: If temperature is out of 'Warning Limits' then a TM flag is raised but there is no change of mode; if outside 'Fault Limits' then FAULT MODE is entered.)

Note 11 When in FAULT MODE the software shall:-

- perform no Scan Control functions (except see note 7)
- perform no SPE functions
- perform TM/TC functions
- wait for serial commands for diagnostics or to switch to POWER-ON mode.

Note 12 deleted

Note 13 On initial entry to Power-On Mode the SCE/SPE/SSHM will be off. They will nominally be switched on by serial command soon after entry to this mode.

Note 14 deleted.

Note 15 The Aux Op Heaters act as a cold redundant set of Rx Op Heaters. Selection is made under software control, in accordance with the Instrument Configuration Table.

Table 4.1-1 Equipment Status for MHS Instrument Modes (2/2)

Astrium Ltd owns the copyright of this document which is supplied in confidence and which shall not be used for any purpose other than that for which it is supplied and shall not in whole or in part be reproduced, copied, or communicated to any person without written permission from the owner.

MHS INSTRUMENT MODE	CMD/TLM BUS	SCIENCE BUS
LAUNCH	none	none
OFF	none	none
POWER-ON	HK TLM Packet Memory Data Packet	Science Data Packet(1) Extended Memory Data Packet
WARM-UP	HK TLM Packet Memory Data Packet	Science Data Packet(1) Extended Memory Data Packet
STANDBY	HK TLM Packet Memory Data Packet	Science Data Packet(1) Extended Memory Data Packet
SCAN	HK TLM Packet	Science Data Packet
FIXED VIEW	HK TLM Packet	Science Data Packet
SELF-TEST	Test Data Packet	Extended Test Data Packet
SAFEING	HK TLM Packet	Science Data Packet (1)
FAULT	HK TLM Packet Memory Data Packet	Science Data Packet (1) Extended Memory Data Packet
OVERCURRENT	none	none

Note: Temperature data is available using the Survival Temperature Interfaces in all modes (including unpowered modes).

Note (1): In these modes, a Science Data Packet is returned with all science data fields set to zero in response to a request for Science Data Packet (science data is not generated in these modes).

Table 4.1-2 Output Data for MHS Instrument Modes

Astrium Ltd owns the copyright of this document which is supplied in confidence and which shall not be used for any purpose other than that for which it is supplied and shall not in whole or in part be reproduced, copied, or communicated to any person without written permission from the owner.

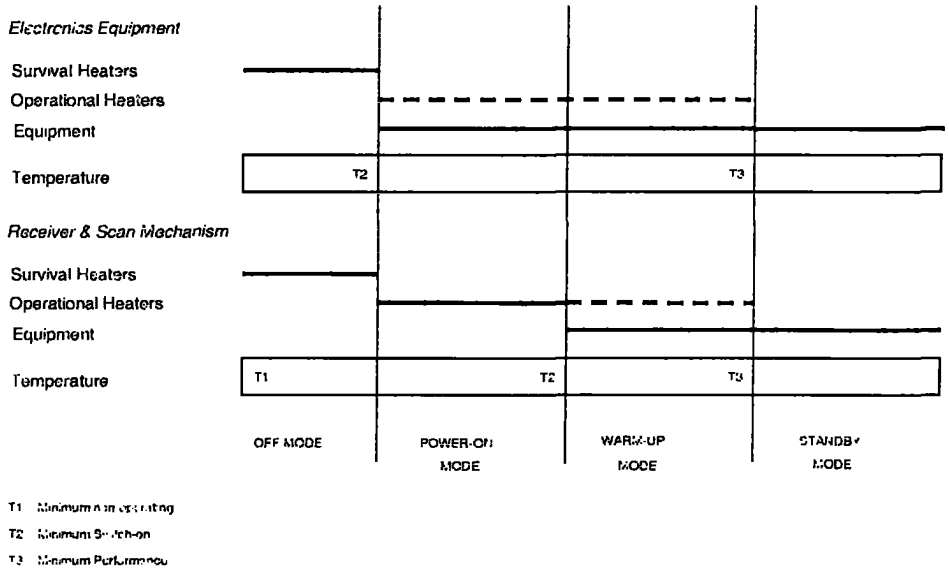

MHS Thermal Control

Figure 4.1-2 Survival and Operational Heater status

Astrium Ltd owns the copyright of this document which is supplied in confidence and which shall not be used for any purpose other than that for which it is supplied and shall not in whole or in part be reproduced, copied, or communicated to any person without written permission from the owner.

4.1.1 Launch Mode

In this mode the MHS Instrument is unpowered. Transition to Off Mode occurs when Survival Power is applied and Main Bus power and Pulse Load power are not present.

4.1.2 Off Mode

In this mode the MHS Instrument is unpowered.

Thermostatically controlled Survival Heaters are used to maintain equipment temperatures within their non-operating (survival) limits. The Electronics Equipment (EE) is maintained at the minimum switch-on limit so that when Main Power is applied (i.e. transition to Power-On Mode) the EE can be immediately switched on safely. The Survival Heaters are powered from the Survival Bus.

In all other powered modes (assuming both Main Bus and Pulsed Load Bus are on) the Survival Heaters are not powered due to the isolation switch in the Power Supply Electronics (PSE).

4.1.3 Power-on Mode

The purpose of this mode is:

- to establish command and telemetry links with the MHS Instrument with a minimum amount of circuits powered to establish the health and status of the MHS Instrument control and telemetry functions
- to warm up the unpowered equipments to minimum switch-on temperatures

This mode is normally entered from Off Mode when the MHS Instrument Main and Pulse Load Buses are applied. Initially, the PSE and one PIE function are powered. The PIE redundancy is determined by which Main Power Bus is applied. For example, if Bus A is applied then PIE A is on and PIE B is off. If both buses are on simultaneously the bus which was applied first determines the PIE selection.

Communications links are established between the MHS Instrument and the platform, allowing the platform to acquire MHS Instrument HK telemetry and determine all equipment temperatures.

The SCE (and therefore SM sensors and SSHM) and SPE functions are initially unpowered in this mode, but they will be switched on in response to a serial command. This will be done immediately after entering Power-on Mode so that the SPE/SCE power dissipation helps to maintain the EE at operating temperatures (the EE has no operational heaters). The SCE and SPE functions are not powered automatically by the software in case a fault condition exists (see Overcurrent Mode). Note that when the SCE are powered, the motor drive circuits are disabled (ie. motor windings have zero current).

The Receiver (Rx) is unpowered in this mode. However, the Rx DC/DC converter (RFCV) will be switched on in response to a serial command, in order to maintain the EE at operating temperatures (see paragraph above). Both on entry to Power-on Mode, and in response to the RFCV switch-on command, the software will set all the relay switches in the Rx to the off position (if not already so) so that the Rx remains unpowered when the RFCV is switched on.

The platform can send serial commands to perform self-test routines to check specific EE functions.

Astrium Ltd owns the copyright of this document which is supplied in confidence and which shall not be used for any purpose other than that for which it is supplied and shall not in whole or in part be reproduced, copied, or communicated to any person without written permission from the owner.

The contents of all data tables can be changed by serial telecommand in this mode, as well as in Warm-up, Standby and Fault Modes. This applies to the Instrument Configuration Table (ICT), Telemetry Limits Table (TLT), Scan Control Table (SCT) and DC Offsets Table (DOT). See section 4.8 for explanatory notes on these tables.

The Survival Heaters are unpowered in this mode, even if the Survival Heater Bus is still on (provided the Main Bus and Pulse Load Bus are both ON). The Operational Heaters are immediately powered on (by software command) so that the equipment temperatures cannot fall below non-operating limits. In fact, the Operational Heaters warm-up the Rx and Scan Mechanism from non-operating temperature limits to minimum switch-on temperatures. The EE does not have Operational Heaters; the dissipation of the equipment circuits is sufficient to reach and maintain operating temperatures from initial switch-on, provided all functions of the EE are powered.

4.1.4 Warm-up Mode

The purpose of this mode is to warm up the MHS Instrument equipments to their full performance operating temperatures. The SM operational heaters are used (if necessary) to minimise the time required to achieve these performance temperatures, or to maintain this condition.

This mode in entered from Power-on Mode either by serial command or automatically. The PIE performs the automatic mode transition in one of two ways:

- Either after the time defined in the Telemetry Limits Table (TLT) which has been determined by thermal analysis, after entering Power-on Mode.
- or when thermistor telemetry monitored by the PIE shows that minimum switch-on temperatures have been reached.

The automatic transition will only occur when the relevant flag in the Instrument Configuration Table (ICT) is set to the 'automatic' state. The default state of this flag following MHS Instrument switch-on (as held in PROM) is 'non-automatic' state.

When the mode is entered, the Receiver is powered. The Receiver redundancy and channel on/off status is determined by the ICT. This configuration may be subsequently changed during Warm-up, Standby and Fault Modes by using dedicated serial commands. Self-test routines can be selected by serial command to test specific EE and Rx functions during the warm-up. The SM operational heaters are powered (if necessary) to reduce the time required to achieve full performance operating temperatures.

4.1.5 Standby Mode

This mode is achieved when the MHS Instrument is ready to perform operational modes (i.e. modes where scientific data is collected). All equipments are at full performance temperatures and the circuits are powered. The Reflector is stationary and under closed loop control, pointing at the OBCT.

This mode can be entered from Warm-up Mode either by serial command or automatically (if ICT flag set to 'automatic', see Warm-up Mode). The PIE performs the automatic mode transition in one of two ways (as for Warm-up Mode):

Astrium Ltd owns the copyright of this document which is supplied in confidence and which shall not be used for any purpose other than that for which it is supplied and shall not in whole or in part be reproduced, copied, or communicated to any person without written permission from the owner.

- Either after the time defined in the Telemetry Limits Table (TLT) which has been determined by thermal analysis, after entering Warm-up Mode.

- or when thermistor telemetry monitored by the PIE shows that full performance operating temperatures have been reached.

On entry to Standby mode, the Scan Mechanism position measurement system is initialised. This is achieved by rotating the Reflector and Flywheel at least one revolution (open loop control) so that the Zero Position sensors are activated and the absolute positions are known.

Following this initialisation, the Reflector is moved to the OBCT and held there under closed loop control. The Rx Operational Heaters are switched off. Heaters are not required to maintain full performance temperatures of the Rx during Standby and operational modes. The SM Operational Heaters are switched on as required, under the control of the software, in order to maintain performance temperatures. This is necessary because the dissipation of the motors when pointing at the OBCT is negligible.

Self-test routines can be selected by serial command in order to check specific functions of the whole MHS Instrument.

From this mode, the operational modes of Scan and Fixed View can be selected by serial command.

4.1.6 Self Test Mode

This mode is provided to allow specific functions of the MHS Instrument to be exercised and tested for the purposes of detailed MHS Instrument health monitoring and diagnostics. The results of the tests are telemetered back either in a Test Data Packet on the Cmd/Tlm Bus or in the Extended Test Data Packet on the Science Bus. These packets are placed in the output buffer in place of HK Telemetry Packets (Cmd/Tlm Bus) and Science Data Packets (Science Data Bus). Therefore, HK Data cannot be retrieved in this mode. Note the HK Telemetry Data Field of the Extended Test Data Packet on the Science Bus is undefined in this mode.

The type of test to be performed is identified in the 'Change Mode' serial command. The following tests are available:

- PIE Functions
- Fixed Pattern
- Watchdog
- Motor
- PRT Calibration

These self-tests are described in sections 4.1.6.1 to 4.1.6.5.

Astrium Ltd owns the copyright of this document which is supplied in confidence and which shall not be used for any purpose other than that for which it is supplied and shall not in whole or in part be reproduced, copied, or communicated to any person without written permission from the owner.

Self-tests can be called from Power-on, Warm-up and Standby modes as shown below:

Self-Test type	Power-on	Warm-up	Standby
PIE: Memory	Y	N	N
PIE: Processor	Y	N	N
PIE: TMTC switch	Y	N	N
Fixed pattern	Y	Y	Y
Watchdog	Y	Y	Y
Motor	N	N	Y
PRT Calibration	N	N	Y

All Self-Test Modes can be called in ONE-SHOT or CONTINUOUS mode. In ONE-SHOT mode tests are performed once. A minimum of one Scan Period is spent in the mode so that a minimum of one Test Packet is generated. Then the S/W automatically changes back to the calling mode. In CONTINUOUS mode the tests are repeated until a Mode Change serial command is received. Test packets are generated for each Scan Period spent in the Self-Test Mode.

Self-tests will use parameters (if applicable) that are in the Self-test Mode Change command (explicit or implied) and/or in the Instrument Configuration Table (ICT).

4.1.6.1 PIE Functions Self Test

This consists of several sub-tests. A test parameter in the ICT defined which sub-test(s) are performed. This self-test can be called from Power-on, Warm-up, Standby and Fault Modes. The sub-tests are:

Memory Self-test
Performs a write/read & compare test on an area of physical memory defined by the test parameters held in the Instrument Configuration Table (ICT). The test aborts after a defined number of errors.

Processor Self-test
Performs 'on-line' tests provided by the VPM Firmware which can be performed without affecting the basic functionality of the MHS Instrument, eg EDAC, CPU, WD, PCC, BIC.

Switch TC/TM Self-Test
Tests the operation of the relay commands which are implemented in the Receiver (ie. channels 1 to 20, see section 4.2.4). Each latching relay is commanded into both states, and the corresponding status verified.

If the RFCV is already on when this self-test is selected, it is switched off before starting to operate the switches, otherwise parts of the Receiver would be powered on and off during the test. If the RFCV was on prior to the test, it is switched back on at the end of the test. The test leaves the relays in the same state as before the test.

Astrium Ltd owns the copyright of this document which is supplied in confidence and which shall not be used for any purpose other than that for which it is supplied and shall not in whole or in part be reproduced, copied, or communicated to any person without written permission from the owner.

4.1.6.2 Fixed Pattern Self-test

Output packets with the data fields set to a fixed binary pattern, as defined by the ICT. This test is used to verify the data transmission to the platform via the 1553 buses.

4.1.6.3 Watchdog Self-Test

The software will enter a continuous loop without resetting the Watchdog timer. This will cause the timer to time-out, causing a CPU hardware reset. This results in the MHS Instrument performing a complete re-initialisation, as though entering POWER-ON Mode from OFF Mode.
This self-test is therefore 'terminal' for the software. It is intended for ground testing only in order to verify the circuit board link from the timer to the CPU reset line exists.

No packets are generated. Reset of the MHS Instrument processor will occur within 0.7 seconds of selecting the test.

4.1.6.4 Motor Self-Test

The motors are driven and data (either current demand, motor position, RDM/FDM) is stored at each Scan Control Clock. The motor profile can be either one of the predefined scan profiles or a different profile loaded by serial command (using Load Memory command), as selected by the test parameters.

An Extended Tests Data Packet is insufficiently long to include all position data for a full scan period, so a part of the scan period can be selected, according to a test parameter. This parameter defines the COUNT value at which position data is started to be collected.

4.1.6.5 PRT Calibration Self-Test

The software collects data from the PRTs at high frequency. The PRTs are selected as in Scan Mode/Fixed View Mode, ie 5 PRTs for approximately 300ms each, plus 3 calibration channels for 300ms each (total time 2.4 seconds). During each 300ms period, the software will read and store the ADC level on each Scan Control Clock (ie 120 readings = 277ms), in order to record the time response of the PRT measurement. This will give information on the condition of the PRT and any self-heating effects. The calibration channels only need to be read once, at the end of the 300ms period.

During this self-test mode the motors are not controlled, but the SM heaters are on and the Rx is on to give a representative thermal environment.

4.1.7 Scan Mode

This is the normal operating mode of the MHS Instrument.

In this mode the following activities are taking place :

- The Reflector is performing its nominal scan motion with views of the Earth, Space Calibration Target and On-Board Calibration Target. An error flag indicates if the pointing performance is not being achieved.
- The Flywheel motor is operating, providing momentum compensation.
- The Receiver channels are active with the signals being sampled and processed.

Astrium Ltd owns the copyright of this document which is supplied in confidence and which shall not be used for any purpose other than that for which it is supplied and shall not in whole or in part be reproduced, copied, or communicated to any person without written permission from the owner.

- The science data, including calibration data, OBCT and Receiver temperature data, and MHS Instrument status data are being gathered and assembled into packets and transferred to the platform upon request.
- HK telemetry is being gathered, monitored and formatted, and is transferred to the platform upon request.
- The MHS Instrument can receive and respond to commands from the platform.

This mode is entered from and exited to Standby Mode by serial command. Serial commands to change data tables (ICT, TLT, SCT, DOT) are valid, although changing some of the parameters in this mode will have unpredictable (but safe) results. Requests for HK Telemetry Packets and Science Data Packets are also valid during this mode. All other serial commands are not valid.

4.1.8 Fixed View Mode

The same activities as Scan Mode are taking place except that the Reflector is not performing the nominal scan but is pointing at a fixed position. The default angular position is 0° (ie the OBCT). This can be changed before calling this mode, or during this mode, by serial command. A serial command is also available to instruct the reflector to make a relative step in either direction from its present position (in multiples or sub-multiples of a pixel FOV).

Telemetry indicates the measured Reflector position and a position error flag indicates that it is within the required tolerance of the commanded angle.

Radiometric data is collected at pixel times equivalent to the Earth, Space and OBCT view periods of Scan Mode and placed in the corresponding positions of the Science Data Packet. The Reflector may up to two seconds to achieve the commanded position. The pixel position data and position error flag in the Science Data packet will indicate when the Reflector is at the commanded position.

This mode is entered from and exited to Standby Mode by serial command. Serial commands to change data tables (ICT, TLT, SCT, DOT) are valid, although changing some of the parameters in this mode will have unpredictable (but safe) results. Requests for HK Telemetry Packets and Science Data Packets are also valid during this mode.

4.1.9 Safeing Mode

The purpose of this mode is to place the MHS Instrument in a safe configuration in readiness for the removal of power. The Reflector is parked at the OBCT to prevent Sun illumination due to a change in the platform attitude.

Note that power can be safely removed from the MHS Instrument at any time in any Mode, but this will not guarantee that the Reflector is pointing at the OBCT.

Entry into Safe Mode is made in response to either an active state on the discrete Safe Command interface, or a serial command on the 1553 Command/Telemetry Bus. The mode can be entered from any other powered mode except Fault Mode. The latter mode transition is not implemented because the OBCT is also parked on entry to Fault Mode unless the nature of the fault is such that it may cause damage to operate any part of the scan control elements.

In all modes except Power-On and Warm-up Modes (and Fault Mode), the Scan Mechanism is at operating temperature and the sensors are fully initialised, so the position of the Reflector can be

Astrium Ltd owns the copyright of this document which is supplied in confidence and which shall not be used for any purpose other than that for which it is supplied and shall not in whole or in part be reproduced, copied, or communicated to any person without written permission from the owner.

verified and moved to the OBCT if necessary. From Power-on and Warm-up Modes the sensors are not initialised and the motors cannot be operated, so no action is taken.

During this mode, power is removed from the Rx, and the Rx Operational Heaters used, as necessary, to maintain switch-on temperatures.

Safe Mode is a transient mode which automatically exits to Power-on Mode after a minimum of 8/3 seconds. At least one HK Telemetry Packet is generated which indicates Safe Mode is selected. It is expected that Safe Mode activities can always be completed in less then 2 x 8/3 seconds.

4.1.10 Fault Mode

This mode is entered whenever an anomaly in the MHS Instrument behaviour is detected by itself. The configuration of the MHS Instrument is changed to minimise the chance of permanent damage to any part of the MHS Instrument.

The possible ways of entering Fault Mode are:-

- Rx DC/DC Converter (RFCV) secondary power overcurrent detected (by hardware)
- RFCV current (+8V, ±15V) outside 'Fault Level' limits (software monitor)
- Main CV current (5V) outside 'Fault Level' limits (software monitor)
- RDM/FDM current (28V) outside 'Fault Level' limits (software monitor)
- RX/SM/EE/Structure temperature TLM outside 'Fault Level' limits (software monitor)
- Loss of REF CLOCK (and therefore Scan Control Clock) (detected by software).
- Switch Telemetry errors, including PROM Board Segment Switch Errors
- Error during motor position acquisition initialisation

The software is collecting current and temperature telemetry at 8/3 second periods. These parameters are checked against two sets of pre-defined limits. One set is called the 'Warning Level' limits, and if any parameter lies outside of these, then the relevant bit of the Fault Code in the HK TLM Packet is set, and the MHS Instrument continues to operate in the same mode. If a parameter lies outside the 'Fault Level' limits, the relevant fault bit is set, and the MHS Instrument automatically enters Fault Mode.

The telemetry checking function can be disabled by writing to the ICT1:4 parameter. This will prevent a transition to Fault Mode. Checking is enabled by default at switch-on.

Fault Mode can also be entered during MHS Instrument configuration changes (mainly during Power-on/Warm-up/Standby mode transitions) if commands are not correctly verified by Switch Telemetry.

The fault bits of the Fault Code are as follows:-

• FDM/RDM motor current trip	The SDA has tripped off due to the current exceeding the hardware trip level (approx 1.6A per motor)
• Current Monitor	A current telemetry lies outside the expected limits
• Thermistor Monitor	A temperature telemetry lies outside the expected limits
• Switch Fault	A switch telemetry does not correspond to its last commanded state
• Processor Fault	A processing fault has occurred eg. memory EDAC error, overflow, backplane bus transaction error, etc.
• DC Offset Fault	An SPE channel reading is either outside or close to the limits of the dynamic range of the ADC, or the Rx gain is not optimised

Astrium Ltd owns the copyright of this document which is supplied in confidence and which shall not be used for any purpose other than that for which it is supplied and shall not in whole or in part be reproduced, copied, or communicated to any person without written permission from the owner.

- Scan Control Fault — The Reflector position lies outside the acceptable limits with respect to the demanded profile position
- REF Clock Fault — The platform Reference Clock is not present. Science functions cannot be performed and the Instrument is not synchronised.

Refer to AD1 section 4.2.2.1 for a fuller description of these bits.

The actions taken in Fault Mode depend on the cause of the fault. In all cases, the Receiver is turned off and the motor drive circuits disabled. If the fault is due to a RFCV H/W overcurrent, RFCV current monitor, Rx or Structure (not SSHM) temperature monitor, then the Reflector is parked at the OBCT before disabling the motor drive circuits. If the fault is due to a 5V current monitor or a SM, SSHM or EE temperature monitor, then the SPE/SCE/SSHM functions are turned off.

Once these actions have been taken, Fault Mode is very similar to Power-on Mode. Diagnostic procedures can be carried out using serial commands to control specific switches, read specific telemetry, and perform memory load and memory read operations. Note that if a self-test routine is required, Power-on Mode must first be selected.

Fault Mode is exited by serial command to Power-on Mode. It may be necessary to change a parameter in the Telemetry Limits Table (TLT), if considered safe, or the Instrument Configuration Table (ICT) before doing this, in order to prevent a transition back to Fault Mode.

4.1.11 Overcurrent Mode

This mode is entered when an overcurrent condition is detected by the Main DC/DC converter, which supplies power to the EE. This can occur in any powered mode and is detected automatically by hardware.

When the current on a Main Converter secondary power line exceeds a predefined limit, perhaps due to a component failure in the EE, the converter is immediately disabled, resulting in all its secondary outputs falling to zero volts.

The EE is therefore switched off and all MHS Instrument software activities stop. In addition, the Rx converter is also disabled, if operating at the time. Note that the Main and Pulsed Load Buses are still active. It is expected that the platform will detect this condition either using its own primary bus current telemetry or due to the lack of responses on the 1553 buses. To restart the MHS Instrument, the platform must switch off the Main Power Bus, causing a transition to OFF Mode, from which power is reapplied to enter Power-on Mode. The platform may chose to apply power on the other bus redundancy in order to select the other PIE redundancy which may prevent a reoccurrence of the fault. Note that the SPE and SCE circuits are not switched on automatically on entry to Power-on Mode in case the fault is in these circuits.

Astrium Ltd owns the copyright of this document which is supplied in confidence and which shall not be used for any purpose other than that for which it is supplied and shall not in whole or in part be reproduced, copied, or communicated to any person without written permission from the owner.

4.2 Scan Control

4.2.1 General Description

The Scan Control functions of the instrument control the motion of the Reflector via the Reflector Drive Module (RDM) and the momentum compensation Flywheel via the Flywheel Drive module (FDM).

The Scan Control functions according to Instrument mode are:

Mode	RDM (Reflector)	FDM (Flywheel)
Power-on	motors are off	motors are off
Warm-up	motors are off	motors are off
Standby	actively held pointing at OBCT	copies the motion of the RDM
Scan	performs the scan profile with an Earth View, Space View and OBCT View.	
Fixed View	actively held pointing at the requested position	
Safeing	moved to OBCT then switched off	
Fault	moved to OBCT then switched off, provided the fault is not related to any part of the scan control functions	
Self-test	depends on type of self-test	

In normal operation, the Flywheel is made to copy the Reflector motion but in the opposite direction such that it compensates the momentum and torque perturbations caused by the Reflector motion.

In Power-on and Warm-up Modes the motors drives are off and so the motor current is zero and hence the Reflector and Flywheel positions are undefined and uncontrolled. There are no clamping devices on the motors, but the motors will remain stationary due to the magnetic slots of the motor and bearing friction, unless an external force is applied.

4.2.2 Initialisation and RDM/FDM enabling and disabling

On the transition from Warm-up Mode to Standby Mode, the motor drives are switched on and an initialisation sequence starts. Both motors rotate at a constant velocity (nominally 60°/s, although this can be changed by changing data reference 2:1 of the Scan Control Table before requesting the mode transition to Standby from Warm-up) for a minimum of 2 revolutions and a maximum of 3 revolutions (ie. a maximum duration of about 11 seconds). This is done in order to correctly initialise the position measurement system using the Inductosyn and Zero Position sensors. When this is successfully completed, the Reflector is parked at the OBCT position, and is actively held at this position by the scan control system.

It is possible to disabled one or both motors (ie. RDM and/or FDM). This is not expected to be done during nominal operation, but may be required during a diagnostic sequence. It also allows the Instrument to continue to be used with the RDM only, in the event of an FDM failure.

Astrium Ltd owns the copyright of this document which is supplied in confidence and which shall not be used for any purpose other than that for which it is supplied and shall not in whole or in part be reproduced, copied, or communicated to any person without written permission from the owner.

Enabling and disabling is achieved in three ways:-

- Instrument Configuration Table (ICT). ICT3:1 and 3:2 define the configuration to be used when performing the Warm-up to Standby Mode transition. This is the recommended means of controlling the motor's configuration, as it ensures correct initialisation of the scan control system.
- Switch Command channels 3:8 (FDM Motor Supply on/off) and 3:9 (FDM Motor Supply on/off). These commands will take immediate effect providing the Instrument is in a mode where the motors are normally active. If performed in an inactive mode, they will be overrided by the ICT when the Warm-up to Standby Mode transition is done. Note that re-enabling a motor that was not enabled on the Warm-up to Standby Mode transition will cause unexpected position and torque transients. This is not recommended.
- On entry to Motor Self-Test Mode, the motor configuration is defined by ICT8:1.

If the FDM is disabled then the RDM will continue to operate normally. If the RDM is disabled and the FDM left enabled, the FDM will only move if the RDM is moved by some external force.

If a Warm-up to Standby Mode transition is attempted with the RDM motor drive disabled, the sensor initialisation cannot be achieved and the software will timeout and enter Fault Mode. If the RDM is enabled and the FDM disabled, then the RDM will be correctly initialised and the transition to Standby Mode completed, but the FDM position measurement will not be correctly initialised.

4.2.3 Scan Profile

In Scan Mode, the Reflector performs the Scan Profile. This is a predefined position versus time profile which incorporates the Earth View and the two calibration targets. Three predefined profiles are provided; Profiles 0, 1 and 2, and these are the same except for small changes in the position of the Space View. There is also provision for modifying part of or the whole of a profile by telecommand.

The 'Profile Table' is an area of memory which holds the current Scan Profile. It is a look-up table which defines both position and acceleration parameters against time, as required by the control algorithm. The Profile Table is calculated on the Warm-up to Standby Mode transition. The Profile parameter, SCT3:1, defines which profile will be calculated. This parameter indicates which set of calculation parameters held in the SCT will be used to calculate the contents of the Profile Table:-

Profile = 0; profile calculation parameters = SCT51..59
Profile = 1; profile calculation parameters = SCT60..68
Profile = 2; profile calculation parameters = SCT69..77.

The algorithm to calculate the position and acceleration values is given in Appendix A5 of the MHS Software URD. The calculation parameters define time segments with associated acceleration, deceleration and constant velocity values. Note that the time parameters corresponding the Earth, Space and OBCT view must be divisible by 8 so that the pixel collection can be synchronised to the scan profile.

The Profile Table can be partially or wholly changed in Standby Mode using Load Memory Commands. If this is performed is it recommended that the Profile parameter (when SCT3:1) is set to '3' to indicate in telemetry that a non-standard profile is being used, and also to ensure the modified Profile Table is not rewritten on the next Warm-up to Standby transition (if Profile=3 then no calculations are performed and the contents of the Profile Table remain

Astrium Ltd owns the copyright of this document which is supplied in confidence and which shall not be used for any purpose other than that for which it is supplied and shall not in whole or in part be reproduced, copied, or communicated to any person without written permission from the owner.

unchanged). The Profile Table can also be modified in Power-on and Warm-up Modes, in which case Profile=3 must be set to ensure it is not rewritten on the transition into Standby.

The standard profiles, held in PROM, are as follows:-

	Profile 0	Profile 1	Profile 2
Earth View	130° to 230°		
OBCT View centre	0°		
Space View centre	253.6°	(253.6 - 4 pixels) =249.1555°	(253.6° + 4 pixels) =258.04444°

Where 180° = Nadir, 1 pixel = 10/9° = 1.1111°
The calibration views are 4 pixels wide (4.4444°)

Astrium Ltd owns the copyright of this document which is supplied in confidence and which shall not be used for any purpose other than that for which it is supplied and shall not in whole or in part be reproduced, copied, or communicated to any person without written permission from the owner.

4.3 Radiometric Data Acquisition

Radiometric signals are acquired by the Rx and digitised bt the EE. The following points affect the performance of the data acquisition system.

- **Rx Gain**

Following switch-on, the Rx baseband amplifier gains are reset to their minimum value (0dB). Over life, the overall Rx gain reduces and this can be compensated for by increasing the baseband gain (+1dB, +2dB, +3dB). This results in a better use of the SPE dynamic range and achieves optimum linearity performance. It will normally be known what the required gains are, and these can be programmed into the ICT (by telecommand) so that the correct gains are set when the Rx is switched on (Power-on to Warm-up Mode transition). Refer to Table 5.3-1 for the commands needed. Normal inspection of the Science Data during operation in Scan Mode will indicate if the signal dynamic range is approaching the minimum acceptable value, thereby indicating a change in gain is advisable.

- **SPE DAC Offsets**

The SPE DAC offsets are initialised to the default values held in PROM following switch-on. Again, these values are largely dependent on the Rx ageing process and their current optimum values will be known at any given time. If these values are significantly different to the PROM default values then reprogramming their values after a switch-on will result in good science data as soon as Scan Mode is selected. Alternatively, the DAC Offset values can be updated by telecommand whilst in Scan Mode. As a third option, if the correct DAC Offset values are not known, Automatic DC Offset Mode can be selected and this will set the correct values after several scan periods in Scan Mode. It is recommended that Manual DC Offset is then reselected to avoid further changes to the values during operation. Normal inspection of the Science Data during operation in Scan Mode will indicate if the SPE signal is approaching a saturation limit thereby indicating a change in DAC offset is advisable.
(Note that a single lsb change of the DAC Offset value results in a 1670 lsb change (1708 for MHS EM) in the SPE output value. If Automatic DAC Offset is left enabled, changes in multiples of 1670 (1708 EM) lsb will occur on the SPE output if the output value nears the dynamic range limits.)

- **SPE Gain**

The SPE Gain is a fixed value, but can vary by a few percent from model to model. The optimum value for the model can be programmed on initialisation using the appropriate telecommand. This value is only used when Automatic DC Offset Mode is selected, and using the optimum value will result in the signal being centred in the dynamic range to better accuracy than with a non-optimised value.

4.4 Fault Handling

The Instrument software performs a telemetry monitoring function which checks the health of the Instrument. If a minor anomaly is detected, then an appropriate Fault Flag is raised in the HK Telemetry (HK packet and SD packet). If a more significant anomaly or fault is detected, then the Instrument ceases the current mode of operation and enters Fault Mode. Actions are taken to minimise any risk of damage to the Instrument, according to the nature of the fault.

Part or all of the telemetry monitoring functions can be disabled by writing to ICT:1:4.

An overcurrent fault on the secondary supplies to the main processing electronics (PIE) will cause the Main DC/DC Converter to trip off and the entire Instrument will turn off (OverCurrent Mode).

Astrium Ltd owns the copyright of this document which is supplied in confidence and which shall not be used for any purpose other than that for which it is supplied and shall not in whole or in part be reproduced, copied, or communicated to any person without written permission from the owner.

For a fuller description of fault handling, refer to the Fault Mode (4.1.1.10) and Overcurrent Mode (4.1.1.11) descriptions.

Astrium Ltd owns the copyright of this document which is supplied in confidence and which shall not be used for any purpose other than that for which it is supplied and shall not in whole or in part be reproduced, copied, or communicated to any person without written permission from the owner.

4.5 Redundancy Handling

PIE A/B
The PIE redundancy is selected by the Main Bus (eg. if Main Bus A is selected, then PIE A is selected). Refer to section 6.2 for a fuller description.

1553 Busses A/B
Both the Cmd/Tlm bus and the Science Data Bus have redundancy. This is fully cross-strapped with the PIE redundancy. The redundancy is selected according to the MIL-STD 1553 definition (ie. the Remote Terminal (MHS Instrument) responds on the same bus that the command arrived on).

Receiver H1..H5 channels Local Oscillators (LOs) A/B
The LO (ie. QBS) redundancies are selected by the internal commands "Hn Select LO A/B" (Refer to section 6.7). These can be issued directly using the Switch Command. In addition, the MINOS issues these commands automatically to select the redundancy in accordance with the ICT (ICT1) on the Power-on to Warm-up Mode transition.

Zero Position Sensors A/B
The zero position sensor redundancies for the RDM and FDM are selected by the internal commands "RDM/FDM Select Zero Position A/B" (Refer to section 6.7). These can be issued directly using the Switch Command. In addition, the MINOS issues these commands automatically to select the redundancy in accordance with the ICT (ICT1) on the Warm-up to Standby Mode transition.

Motor Commutation Sensors A/B
The motor commutation sensor redundancies for the RDM and FDM are selected by the internal commands "RDM/FDM Motor Sensors A/B" (Refer to section 6.7). These can be issued directly using the Switch Command. In addition, the MINOS issues these commands automatically to select the redundancy in accordance with the ICT (ICT3) on the Warm-up to Standby Mode transition.

SPE Channels 1..5 (nominal) and SPE channel 6 (redundant)
The SPE redundant channel (SPE6) can be used to replace any one of the 5 nominal channels. This is achieved by using the internal commands (SPE Mux Code 3:1, 3:2, 3:3, refer to section 6.7). These can be issued directly using the Switch Command. In addition, the MINOS issues these commands automatically to select the redundancy in accordance with the ICT (ICT3:1) on the Warm-up to Standby Mode transition.

Astrium Ltd owns the copyright of this document which is supplied in confidence and which shall not be used for any purpose other than that for which it is supplied and shall not in whole or in part be reproduced, copied, or communicated to any person without written permission from the owner.

4.6 MHS Instrument On-Board Software (MINOS)

4.6.1 Software Functions

The MHS Instrument On-Board Software (MINOS) plays a major role in determining the operation of the Instrument. The software performs the following functions:-

Modes of Operation
The software is structured such that it is always in a predefined Mode of Operation. Each mode corresponds to a predefined Instrument configuration in which the hardware is in a particular configuration and the hardware and software are performing particular functions.

Command Decoding and Execution
When a command is received on one of the 1553 serial buses, an interrupt is generated and the software performs the decoding of the command and schedules the execution of the command.

Instrument control, telemetry acquisition and telemetry checking
The software controls the hardware by activating the necessary hardware control lines. The software verifies that all control actions have been correctly performed by reading the hardware status and reporting this status in the telemetry packets which are output on the 1553 buses. The software also performs routine monitoring of the hardware status (eg. temperatures, current consumptions). The software also performs an automatic telemetry checking function in which telemetry is compared with expected values. Minor anomalies cause a warning flag to raised, major anomalies cause the Instrument to enter Fault Mode.

Science Data acquisition
The software acquires the radiometric data from the 5 receiver channels and places the data into Science Data Packets.

Scan Control
When in a mode in which the motors are active, the software performs the scan control function. The software acquires the current motor positions from the hardware interfaces, calculates the required control torque (motor current) and outputs it to the scan drive amplifiers. This activity represents the most computationally intensive task of the MINOS.

4.6.2 Software Description and Architecture

There are 3 components to the software:-

- Firmware
- MINOS Downloader
- MINOS

The Firmware is stored in PROM (8K words) local to the processor (on the processor board). The MINOS downloader (approx 1K) and MINOS are stored in PROM (47K words) on the PROM board.

When MHS is switched on, the processor executes the Firmware. The Firmware initialises the local processor peripherals (eg counter/timers, backplane bus controller) and performs a test of the essential hardware functions (eg RAM test). Then the Firmware copies the MINOS Downloader from the PROM Board into the processor RAM using the serial backplane bus. Execution is then transferred to the MINOS Downloader.

Astrium Ltd owns the copyright of this document which is supplied in confidence and which shall not be used for any purpose other than that for which it is supplied and shall not in whole or in part be reproduced, copied, or communicated to any person without written permission from the owner.

The MINOS Downloader, running from RAM, initialises the Command/Telemetry 1553 Bus and prepares a HK Telemetry Packet (an 'Initialisation Packet' which is a valid format but contains limited telemetry). This means that basic command/telemetry links with the platform are established, enabling the platform to verify the status of MHS. This occurs about 1.9 seconds after application of MHS power.

Then the MINOS Downloader starts to download into RAM the full MINOS from the PROM Board using the serial backplane bus. After downloading, execution is transferred to the MINOS.

The MINOS initialises more of the Instrument hardware (eg Science Data Bus, internal command/telemetry circuits) and then enters Power-On Mode. This occurs about 3.5 seconds after application of MHS power.

Once running, the MINOS execution is based on a real-time clock of 432Hz. This clock is called the Scan Control Clock and interrupts the processor every 2.31ms. On each interrupt, the MINOS increments the Scan Control Count (SCC). SCC starts with a value 0, and rolls over from 1151 to 0. Each clock period is referred to as a 'slot' and the 1152 slots (0..1151) correspond exactly to 2.667 seconds (1152/432) which equates exactly to the time for one revolution of the Reflector in Scan Mode. This time (2.667s) is called a 'Scan Period'.

The MINOS schedules specific tasks to be performed in each slot. If the MINOS is in a mode in which the motors are energised, then the Scan Control Function of the MINOS is performed in every slot. Some MINOS functions are performed only once per Scan Period, eg HK and SD Packet preparation, acquisition of a specific telemetry channel, and so these tasks are scheduled to occur on a specific slot number. Command processing is required whenever a command arrives. Numerous slots are allocated for command processing, should it be required, such that a command is always processed within 0.1 seconds.

4.7 Power Consumption

Table 4.7-1 shows the power consumption of the MHS Instrument in different modes of operation and for each power bus.

The nominal values are the values which can be expected when operating the Instrument in a room temperature environment (ground testing) and during early flight in a nominal thermal environment.

The worse case values represent the maximum end of life values in an extreme temperature environment.

These figures represent the average power over one orbit.

The Main Bus current is approximately constant within a given mode, with small transients (<10%) due to relay switching and 1553 activity.

The Survival Bus current is approximately constant except for any duty cycle switching of thermostats due to the thermal environment.

The Pulsed Load Bus current is approximately constant in all modes except Scan Mode. In Scan Mode, the current is a repetitive waveform with a period of 2.667 seconds and a peak value of 2.0 amps typical (2.7 amps worst case).

Astrium Ltd owns the copyright of this document which is supplied in confidence and which shall not be used for any purpose other than that for which it is supplied and shall not in whole or in part be reproduced, copied, or communicated to any person without written permission from the owner.

Mode	Nominal Power (Watts)			Worst Case Power (Watts)		
	Main Bus	Pulsed Load Bus	Survival Bus	Main Bus	Pulsed Load Bus	Survival Bus
Off	0.0	0.0	60	0.0	0.0	66
Power-on	29.0	27.0	0	39.0	33.0	0
Warm-up	58.0	6.5	0	76.0	8.0	0
Standby	58.0	9.0	0	76.0	12.0	0
Scan	58.0	2.5	0	76.0	4.0	0
Fixed View	58.0	9.0	0	76.0	12.0	0

Table 4.7-1 Power Consumption versus Mode of Operation

Astrium Ltd owns the copyright of this document which is supplied in confidence and which shall not be used for any purpose other than that for which it is supplied and shall not in whole or in part be reproduced, copied, or communicated to any person without written permission from the owner.

4.8 Software Parameter Tables

The MHS Instrument has 4 tables of parameters which are used to determine the detailed behaviour of the instrument. These tables are:-

Instrument Configuration Table	ICT	36 octets
Telemetry Limits Table	TLT	396 octets
Scan Control Table	SCT	360 octets
DC Offsets Table	DOT	16 octets

These tables are stored in PROM and hold the default values. These default values are copied in to RAM at power-on initialisation for use during operation. The value of any parameter can be changed during operation by sending a 'Load Table Data' command on the Command/telemetry Bus.

The format of the tables is given in AD1 Appendices A to D. The format is specific to each table and depends on the data type of the parameter. Some parameters are floating point values (4 octets), some are integers (one octet, two octets), some are fixed point (an integer with a scaling constant) and some are control flags (single bits, with up to 8 flags concatenated into a single octet).

The Load Table Command changes a block of 4 octets simultaneously, so in some cases many parameters can be changed at the same time. The command defines which table and which block ('Data Reference') is to be changed, and the new data.

Refer to the introduction to each Appendix of AD1 for a description of the table usage and parameter usage. A summary is provided in the following sections.

4.8.1 Instrument Configuration Table (ICT)

This table can be divided into two parts:

- Data Ref 0 to 3 = Instrument Configuration control
- Data Ref 4 to 8 = Self-test routine parameters

Data Ref 0	several control flags which allow automatic functions to be turned on/off.
Data Refs 1,2 & 3	provide control flags to indicate the configuration of internal command channels. Note that the Receiver commands (1:1 to 1:37) are set up on the Power-on to Warm-up Mode transition, and the BIM commands (3:1 to 3:11) are set up on the Warm-up to Standby Mode transition.
Data Ref 2	indicates which Operational Heaters to use for the Receiver (ie. Rx Op Heaters or Aux Op Heaters).
Data Ref 4 to 8	Self-test routine parameters should be self explanatory after reference to self-test mode descriptions

Astrium Ltd owns the copyright of this document which is supplied in confidence and which shall not be used for any purpose other than that for which it is supplied and shall not in whole or in part be reproduced, copied, or communicated to any person without written permission from the owner.

4.8.2 Telemetry Limits Table (TLT)

Refer to notes in AD1 Appendix B.

This tables provides warning and fault levels for:

- thermistor telemetry : for each mode of operation (Data Refs 1..72)
- current telemetry : for each mode of operation (Data Refs 86..99)

It also provides parameters which control when the two automatic mode transitions occur (Power-on to Warm-up, Warm-up to Standby):

- thermistor telemetry (Data refs 73..84)
- timeout values (Data Ref 85).

4.8.3 Scan Control Table (SCT)

The only Data Ref required during nominal operation is Data Ref 3 (Profile type) other than changes which are performed by command at initialisation, as defined by section 5.

Data Refs 0:1, 0:2, 6, 7, 29, 30 define the characteristics of the Scan Drive Amplifier in the EE to allow optimisation of control.

Data Ref 0:3 provide control flags for enabling and disabling the ripple torque and cogging torque correction terms of the control algorithms.

Data Ref 0:4 defines a delay parameter which allows the current demand output to be delayed by a number of control clock periods to allow assessment of the control stability during ground testing.

Data Ref 1 defines the allowed tolerance of the control error (demanded position - actual position). If the control error exceeds these values during radiometric data measurement periods, an error flag is raised in the HK telemetry and Science Data Packets.

Data Ref 2 defines the speed of rotation used when the motor position sensors are being initialised (on Warm-up to Standby Mode transition).

Data Ref 3 defines which type of profile the Reflector performs. The software uses a look-up table (called the Profile Table) which defines the position versus time of the Reflector. Profile 0 is the nominal profile, Profile 1 corresponds to the Space View moved 4.44° closer to the Earth View, Profile 2 corresponds to the Space View moved 4.44° closer to the OBCT. If Profile 3 is defined, no profile is calculated and it is the platform's responsibility to load a valid profile into the software Profile Table.

Data Refs 4 to 26, 78 to 81, 84, 85, 87 to 101 are parameters which affect the control characteristics of the RDM.

Data Refs 27 to 50, 82, 83, 86 are parameters which affect the control characteristics of the FDM.

Data Refs 51 to 77 are parameters which define the shape of Profiles 0, 1 and 2. These parameters must be updated in Power-on Mode or Warm-up Mode because the MHS Instrument software will recalculate the Profile Table on the Warm-up to Standby Mode transition. If none of the 3 profiles

Astrium Ltd owns the copyright of this document which is supplied in confidence and which shall not be used for any purpose other than that for which it is supplied and shall not in whole or in part be reproduced, copied, or communicated to any person without written permission from the owner.

are what is required, these parameters are not used, and the Profile Table must be loaded manually, element by element, by serial command (and Data Ref 3 must be set to '3').

4.8.4 DC Offsets Table (DOT)

This table provides parameters which are used to keep the radiometric input signal within the dynamic range of the ADC in the EE.

Data Refs 0:1 to 1:1 define the value of the DAC which removes the DC component of the radiometric signal. These values are used when manual control of the DC offset is selected (See ICT Data Ref 0) and at initialisation when automatic control is selected.

The remaining parameters are related to automatic control of the DC offset, and define the gain of the amplifier chain, the ideal operating point, upper and lower deadbands and allowable dynamic range.

Astrium Ltd owns the copyright of this document which is supplied in confidence and which shall not be used for any purpose other than that for which it is supplied and shall not in whole or in part be reproduced, copied, or communicated to any person without written permission from the owner.

5. COMMISSIONING AND INITIALISATION

5.1 Launch and Early Orbit Phase

There are no operations foreseen during the Launch and Early Orbit Phase. The MHS Instrument shall be in OFF Mode. Thermal monitoring may be achieved using the 3 survival thermistors which are mounted in the Electronics Equipment, Receiver and Scan Mechanism. If the Survival Power Bus is active, thermal control will be achieved using the Instrument Survival Heaters and thermostats (Rx and SM above survival temperatures, EE above switch-on temperatures).

5.2 Commissioning

For the first in-orbit switch-on of MHS, the Instrument shall be commissioned using the standard switch-on procedure (see procedure P100, section 7). The Performance Checkout (P400) and Rx Gain and DC Offset Optimisation (P330, section 7) procedures, which are optionally called up by P100, shall be performed. These will ensure that the function and performance of the MHS hardware is tested, the MHS software parameters are initialised to the correct values, and the radiometric acquisition functions are initialised and optimised.

5.3 Instrument Initialisation

The instrument shall be switched on using the standard switch-on procedure (P100, section 7). This procedure ensures that that the following initialisations are made:-

- The instrument is commanded into Power-on Mode 5 seconds after application of Main Bus Power.
- the instrument time-code is set to On-board Time or Universal Time so that all telemetry and data packets contain a valid and unique timecode.
- all software parameters are set to their required values. In most cases these are held in PROM and are automatically set to the required value, but some parameters are measured during calibration testing on the ground and so the PROM values are not valid. Some parameters are model specific and allow the performance of a particular model to be optimised. They are changed by telecommand. These telecommands are included in the procedure, and the parameter values for each model are summarised in Table 5.3-1.
- the radiometric acquisition functions are initialised (see description in section 4.3). During ground testing the nominal settings for the Rx Gains and DC Offsets will be established. These values will be verified and if necessary modified during in-orbit commissioning tests. Each time the instrument is switched-on these values must be reloaded into the instrument and therefore the platform or ground must keep a record of the current values. Over the lifetime of the instrument, the settings will need to be adjusted to compensate for gain and offset drifts in the instrument. The optimum values are established by the 'Rx gains and DC Offset Optimisation Procedure' (P330) which can be called up at any time (eg. if DC Offset Error Flags in HK Telemetry Packets and Science Data Packets indicate an error) or as part of the Routine Performance Checkout (P400).
- optionally perform a Routine Performance Checkout. It is expected that this will be performed at least once per month. This tests the following functions:-
  - core processor functions
  - relay operation
  - processor memory
  - 1553 bus

Astrium Ltd owns the copyright of this document which is supplied in confidence and which shall not be used for any purpose other than that for which it is supplied and shall not in whole or in part be reproduced, copied, or communicated to any person without written permission from the owner.

- scan control performance
- optimisation of Rx Gains and DC Offsets

Astrium Ltd owns the copyright of this document which is supplied in confidence and which shall not be used for any purpose other than that for which it is supplied and shall not in whole or in part be reproduced, copied, or communicated to any person without written permission from the owner.

Table Parameter Name	Table & Data Ref	Default (In PROM)	EM	PFM	FM2	FM3	FM4	*FM5*
H1 LO Redundancy		Side A	PROM	PROM	Side B	PROM	PROM	*TBD*
H2 LO Redundancy		Side A	PROM	PROM	Side B	PROM	Side B	
H3/4 LO Redundancy		Side A	Side B	PROM	Side B	Side B	PROM	
H5 LO Redundancy		Side A	PROM	PROM	PROM	PROM	Side B	
H1 Rx Gain		0dB	PROM	PROM	PROM	PROM	PROM	
H2 Rx Gain		0dB	PROM	PROM	PROM	PROM	PROM	
H3 Rx Gain		0dB	PROM	PROM	PROM	PROM	PROM	
	ICT1	AA,AA,AA,49	AA,9A,AA,49	n/a	99,9A,AA,49	AA,9A,AA,49	A9,AA,9A,49	
H4 Rx Gain		0dB	PROM	2dB	PROM	PROM	PROM	*TBD*
H5 Rx Gain		0dB	PROM	PROM	PROM	PROM	PROM	
	ICT2	20,00,00,00	n/a	60,00,00,00	n/a	n/a	n/a	
H1 DC Offset		3.5V	3.6V	2.5V	2.5V	2.5V	2.5V	*TBD*
H2 DC Offset		8.2V	4.8V	3.7V	3.3V	3.3V	3.3V	
H3 DC Offset		6.7V	3.2V	2.7V	3.4V	3.4V	3.4V	
H4 DC Offset		7.3V	2.1V	1.5V	3.0V	3.0V	3.0V	
	DOT0	5A,D1,AB,BA	5D,7B,52,37	3F,5E,46,27	3F,55,56,4C	3F,55,56,4C	3F,55,56,4C	
H5 DC Offset		6.8V	0.7V	3.4V	2.2V	2.2V	2.2V	*TBD*
SPE Gain		6.65	PROM	6.50	6.50	6.50	6.50	
	DOT1	AE,85,73,2C	13,85,73,2C	57,82,73,2C	38,82,73,2C	38,82,73,2C	38,82,73,2C	
SPE Min Dynamic Range		75%	50%	50%	50%	50%	50%	*TBD*
	DOT3	E6,58,BF,F4	E6,58,7F,F8	E6,58,7F,F8	E6,58,7F,F8	E6,58,7F,F8	E6,58,7F,F8	
RF Bore offset		0.00	64.9589	62.71	154.473	153.656	333.592	*TBD*
- Inductosyn Bias Error		-0.00	-0.0489	-0.00	-0.04	-0.00	-0.00	
=Inductosyn Zero Pos'n Offset (A)		=0.00	=64.91	=62.71	= 154.433	=153.656	=333.592	
	SCT11	00,00,00,00	40,E8,F6,07	7D,6B,85,06	4D,37,6D,08	4C,D3,F8,08	53,65,E3,09	
Inductosyn Zero Pos'n Offset (B) (=Sensor A offset +180)		180.0	244.91	242.71	334.433	333.656	153.592	*TBD*
	SCT84	5A,00,00,08	7A,74,7B,08	79,5A,E1,08	53,9B,B6,09	53,69,FC,09	4C,CB,C7,08	
Earth Scan position error tolerance		0.1°	0.15°	0.15°	0.15°	0.15°	0.15°	*TBD*
	SCT1	0A,3C,3C,00	0F,3C,3C,00	0F,3C,3C,00	0F,3C,3C,00	0F,3C,3C,00	0F,3C,3C,00	

Astrium Ltd owns the copyright of this document which is supplied in confidence and which shall not be used for any purpose other than that for which it is supplied and shall not in whole or in part be reproduced, copied, or communicated to any person without written permission from the owner.

Table Parameter Name	Table & Data Ref	Default (in PROM)	EM	PFM	FM2	FM3	FM4	*FM5*
Cogging correction 1: amplitude	SCT12	0.02 51,EB,86,FB	0.015 7A,E1,48,FA	PROM n/a	0.008 41,89,38,FA	PROM n/a	0.012 62,4D,D2,FA	***TBD***
Cogging correction 1: frequency	SCT13	156 4E,00,00,08	39 4E,00,00,06	PROM n/a	24 60,00,00,05	PROM n/a	11.5 5C,00,00,04	***TBD***
Cogging correction 1: phase	SCT14	0 00,00,00,00	180 5A,00,00,08	PROM n/a	320 50,00,00,09	PROM n/a	210 69,00,00,08	***TBD***
Cogging correction 2: amplitude	SCT90	0 00,00,00,00	0.002 41,89,38,F8	PROM n/a	0.011 5A,1C,AC,FA	PROM n/a	0.004 41,89,38,F9	***TBD***
Cogging correction 2: frequency	SCT91	0 00,00,00,00	13 68,00,00,04	PROM n/a	12 60,00,00,04	PROM n/a	23 5C,00,00,05	***TBD***
Cogging correction 2: phase	SCT92	0 00,00,00,00	PROM n/a	PROM n/a	240 78,00,00,08	PROM n/a	290 48,80,00,09	***TBD***
RDM SDA Max demand code FDM SDA Max demand code Cogging corrections	SCT0	F0 F3 Enabled F0,F3,80,00	PROM PROM PROM n/a	F4 F6 Disabled F4,F6,00,00	EE F6 Enabled EE,F6,80,00	EE F6 Enabled EE,F6,80,00	F5 EF Enabled F5,EF,80,00	***TBD***
RDM SDA amplifier gain	SCT7	193.16 60,94,7B,08	PROM n/a	196.0 62,00,00,08	190.0 5F,00,00,08	190.0 5F,00,00,08	196 62,00,00,08	***TBD***
FDM SDA amplifier gain	SCT30	193.16 60,94,7B,08	PROM n/a	196.0 62,00,00,08	196.0 62,00,00,08	196.0 62,00,00,08	191.0 5F,80,00,08	***TBD***
RDM Standby Mode Current Limits Upper Fault Upper Warning Lower Warning Lower Fault	TLT 87	303mA 193A 0mA 0mA 16,0E,00,00	620mA 565mA PROM PROM 2D,29,00,00	620mA 565mA PROM PROM 2D,29,00,00	620mA 565mA PROM PROM 2D,29,00,00	620mA 565mA PROM PROM 2D,29,00,00	620mA 565mA PROM PROM 2D,29,00,00	***TBD***

Astrium Ltd owns the copyright of this document which is supplied in confidence and which shall not be used for any purpose other than that for which it is supplied and shall not in whole or in part be reproduced, copied, or communicated to any person without written permission from the owner.

Table Parameter Name	Table & Data Ref	Default (in PROM)	EM	PFM	FM2	FM3	FM4	*FM5*
FDM Standby Mode Current Limits								*TBD*
Upper Fault		303mA	620mA	620mA	620mA	620mA	620mA	
Upper Warning		193A	565mA	565mA	565mA	565mA	565mA	
Lower Warning		0mA	PROM	PROM	PROM	PROM	PROM	
Lower Fault		0mA	PROM	PROM	PROM	PROM	PROM	
	TLT 90	16,0E,00,00	2D,29,00,00	2D,29,00,00	2D,29,00,00	2D,29,00,00	2D,29,00,00	
RDM Scan Mode Current Limits								*TBD*
Upper Fault		881mA	1281mA	1281mA	1281mA	1281mA	1281mA	
Upper Warning		826mA	PROM	PROM	PROM	PROM	PROM	
Lower Warning		0mA	PROM	PROM	PROM	PROM	PROM	
Lower Fault		0mA	PROM	PROM	PROM	PROM	PROM	
	TLT 88	40,3C,00,00	5D,3C,00,00	5D,3C,00,00	5D,3C,00,00	5D,3C,00,00	5D,3C,00,00	
FDM Scan Mode Current Limits								*TBD*
Upper Fault		881mA	1281mA	1281mA	1281mA	1281mA	1281mA	
Upper Warning		826mA	PROM	PROM	PROM	PROM	PROM	
Lower Warning		0mA	PROM	PROM	PROM	PROM	PROM	
Lower Fault		0mA	PROM	PROM	PROM	PROM	PROM	
	TLT 91	40,3C,00,00	5D,3C,00,00	5D,3C,00,00	5D,3C,00,00	5D,3C,00,00	5D,3C,00,00	
5V Power-on Mode Current Limits								*TBD*
Upper Fault		773mA	1194mA	1194mA	1194mA	1194mA	1194mA	
Upper Warning		706mA	1093mA	1093mA	1093mA	1093mA	1093mA	
Lower Warning		572mA	504mA	504mA	504mA	504mA	504mA	
Lower Fault		504mA	387mA	387mA	387mA	387mA	387mA	
	TLT 92	2E,2A,22,1E	47,41,1E,17	47,41,1E,17	47,41,1E,17	47,41,1E,17	47,41,1E,17	

Table 5.3-1 Initialisation of Software Parameters

Astrium Ltd owns the copyright of this document which is supplied in confidence and which shall not be used for any purpose other than that for which it is supplied and shall not in whole or in part be reproduced, copied, or communicated to any person without written permission from the owner.

6. INSTRUMENT COMMAND, TELEMETRY AND DATA INTERFACES

6.1 Introduction

This section describes how the MHS Instrument is controlled and monitored using the available command and telemetry interfaces. It also describes how Instrument scientific data is acquired over the available data interfaces.

The MHS Instrument is commanded using the following interfaces:-

Command	Type of interface	Full description
Instrument on/off	Power lines	6.2
Safe Command	Discrete 5V pulsed	6.3
Serial Commands (Command Packets)	Packetised commands on the:- • Command/Telemetry Bus (MIL-STD 1553)	6.6.2

The MHS Instrument Telemetry is retrieved using the following interfaces:-

Telemetry	**Type of interface**	**Full description**
Main Bus Status	Discrete Switch Closure	6.4
Survival Temperatures	Discrete Thermistor	6.5
All other telemetry	Packetised data on the:- • Command/Telemetry Bus • Science Data Bus (MIL-STD 1553)	6.6.2 6.6.3

The MHS Instrument Scientific Data is retrieved using the following interfaces:-

Science Data	**Type of interface**	**Full description**
All science data	Packetised data on the:- • Science Data Bus (MIL-STD 1553)	6.6.3

The MHS Instrument has many switches and devices which are controlled by internal commands which are executed either manually in response to external commands or automatically in response to the on-board software sequencing. These commands are described in section 6.7. All controllable switches and devices have status telemetry, and there are many other monitoring points (eg. temperature, current). These are described in section 6.8.

Astrium Ltd owns the copyright of this document which is supplied in confidence and which shall not be used for any purpose other than that for which it is supplied and shall not in whole or in part be reproduced, copied, or communicated to any person without written permission from the owner.

Appendix A provides diagrams which show the functionality of each command and telemetry channel as follows:-

- Figure A1: Receiver Power Switching and LO Redundancy Selection
- Figure A2: Rx Gain, DC Offset and SPE Redundancy
- Figure A3: Scan Control
- Figure A4: Power Distribution
- Figure A5: Temperature Telemetry

Astrium Ltd owns the copyright of this document which is supplied in confidence and which shall not be used for any purpose other than that for which it is supplied and shall not in whole or in part be reproduced, copied, or communicated to any person without written permission from the owner.

6.2 Power Bus Control

The MHS Instrument has 3 primary power buses:

- Main Bus
- Pulsed Load Bus
- Survival Bus

On/off control of the MHS Instrument is achieved by switching buses on and off. There are no on/off switches for the PIE Function within the instrument. The Main Bus powers all parts of the instrument except the motors and the operational heaters. These latter two parts are powered by the Pulsed Load Bus. The Survival Bus powers the Survival Heaters only.

As soon as the Main Bus becomes active (ie. between 22V and 37V at the MHS Instrument input) then the instrument powers on and enters Power-on Mode. Normally, the Pulsed Load Bus is applied simultaneously with or soon after the Main Bus to allow operational heaters and motor functions to operate. When both these buses are active, the instrument automatically isolates the survival heaters from the Survival Bus.

The Main Bus and Pulsed Load Buses are both redundant. The active bus is automatically selected by the instrument. If both A and B buses are active then the first bus which became active is used. The selected Main Bus is used to power the non-redundant power supply converter, and the secondary power outputs are routed to the PIE (Processor and Interface Electronics) redundancy according to which Main Bus is active (ie. PIE A selected by Main Bus A, PIE B selected by Main Bus B). The functions powered by the Pulse Load Bus are non-redundant and so the selected bus is simply routed to the non-redundant heaters and into the non-redundant motor drive circuits. Note that the Main Bus redundancy can be selected independent of the Pulse Load Redundancy (eg. Main Bus A and Pulse Load Bus B is a valid configuration).

No on/off configurations and sequences of the power buses will cause damage to the MHS Instrument. However, certain configurations are not recommended. Refer to Table 6.2-1.

For more details on power bus control refer to the mode descriptions in section 4.1.

Astrium Ltd owns the copyright of this document which is supplied in confidence and which shall not be used for any purpose other than that for which it is supplied and shall not in whole or in part be reproduced, copied, or communicated to any person without written permission from the owner.

	Survival Bus	Main Bus	Pulsed Load Bus	Instrument State
NOMINAL STATES	OFF	OFF	OFF	Launch Mode. Instrument OFF and no heater power for thermal control.
	ON	OFF	OFF	Instrument OFF. Thermal Control by Survival Heaters and thermostats.
	OFF	ON	ON	Instrument ON.
NON-NOMINAL STATES	OFF	OFF	ON	Instrument OFF (not recommended). No power available for heaters.
	OFF	ON	OFF	Instrument ON (not recommended). Limited functionality (ie. no motor power) and no heater power.
	ON	ON	ON	Acceptable Instrument ON state (no Survival Bus power will be consumed)
	ON	OFF	ON	Instrument OFF (not recommended). Thermal Control by Survival Heaters and thermostats.
	ON	ON	OFF	Instrument ON state (not recommended). Limited functionality (ie. no motor power) and thermal control by Survival Heaters and thermostats only.

Table 6.2-1 Power Bus On/Off Configurations

Astrium Ltd owns the copyright of this document which is supplied in confidence and which shall not be used for any purpose other than that for which it is supplied and shall not in whole or in part be reproduced, copied, or communicated to any person without written permission from the owner.

6.3 Safe Command

The discrete 'Safe Command' interface is an alternative to sending a 'Set Mode (Safeing)' command on the Command/Telemetry Bus. This 5V pulse command (1ms duration) causes an immediate transition into Safeing Mode. Safeing Mode is described in section 4.1.1.9.

6.4 Main Bus Status

This is a discrete switch closure interface, conditioned and acquired by the platform, which indicates which Main Bus (primary power) is selected, as follows:

- switch closed circuit : Main Bus A selected
- switch open circuit : Main Bus B selected

Refer to section 6.2 about primary power bus redundancy selection.

6.5 Survival Thermistor Telemetry

Three thermistors are provided which are conditioned and acquired by the platform and allow temperature monitoring of the Instrument at all times, including MHS Off Mode. The thermistors are located in the three main equipments as follows:-

EE Survival Thermistor : in the Electronics Equipment
Rx Survival Thermistor : in the Receiver Equipment
SM Survival Thermistor : in the Scan Mechanism

6.6 MIL-STD 1553 Buses

6.6.1 Introduction

The majority of Instrument commanding, monitoring and scientific data retrieval is achieved using two MIL-STD 1553 serial buses:-

- Command/Telemetry Bus (CT Bus)
- Science Data Bus (SD Bus).

The CT Bus is used for general Instrument commanding, and retrieval of housekeeping telemetry and test/diagnostic data. The SD Bus is used primarily for retrieval of scientific data, but can also be used for retrieval of housekeeping telemetry and test/diagnostic data. Instrument commanding can not be achieved using the SD Bus.

All messages on these buses are formatted as CCSDS packets.

Command packets are issued to the Instrument on the CT Bus in order to control the Instrument. In addition, command packets can be issued to request housekeeping telemetry or test/diagnostic data, in which case the Instrument will respond by issuing the relevant packet on the CT Bus.

All command packets issued on the SD Bus are requests for scientific data, housekeeping telemetry or test/diagnostic data. The Instrument responds by issuing the relevant packet on the SD Bus.

Astrium Ltd owns the copyright of this document which is supplied in confidence and which shall not be used for any purpose other than that for which it is supplied and shall not in whole or in part be reproduced, copied, or communicated to any person without written permission from the owner.

The Instrument operates on a repetitive cycle with a period of 8/3=2.667 seconds. This period is called the 'Scan Period'. The start of every third Scan Period coincides with the platform 8SP synchronisation signal. When in Scan Mode, the Reflector performs one complete revolution per Scan Period and the Reflector points at the start of the Earth View (outer edge of Pixel 1) at the start of a Scan period.

During normal operation, the Instrument acquires housekeeping telemetry and science data over a single Scan Period and generates a HK Packet and a Science Data Packet. These packets are then transferred to the platform in response to the relevant packet request commands (Request HK Packet, Request SD Packet). The HK Packet is requested and transferred over the CT Bus and the SD Packet is requested and transferred over the Science Data Bus.

If the Instrument is in a Self-Test Mode, the HK Telemetry Packet and Science Data Packet are automatically replaced by a Test Data Packet and an Extended Test Data Packet respectively. The same commands as above (Request HK Packet, Request SD Packet) are used to transfer these test data packets to the platform.

The platform is the Central Terminal for the 1553 busses and so all transfers are controlled by the platform. Therefore, in normal operation, the platform will perform the following 1553 actions during each Scan Period:

- issue a 'Request HK Packet' over the CT Bus
- collect the HK Packet over the CT Bus
- issue a 'Request SD Packet' over the SD Bus
- collect the SD Packet over the SD Bus

A Memory Data Packet or Extended Memory Data Packet is acquired by issuing either a 'Request Memory Data Packet' or 'Request Extended Memory Packet' on the CT Bus or SD Bus respectively. The requested memory contents are assembled into the packet in response to this command. If a Memory Data Packet or Extended Memory Data Packet is requested, no other packets should be requested or collected in the same Scan Period.

All packets contain a header which uniquely identifies the packet as an MHS packet. They also contain a Time Code field which corresponds to the on-board time at the start of the Scan Period for which the packet data applies.

A packet also contains a Mode Code field. This identifies the current mode of operation. If the Mode Code indicates Self-Test Mode then it implies that this packet is a Test Data Packet or Extended Test Data Packet. The Mode Code field of a Memory Data Packet and Extended Memory Packet does not indicate mode of operation but has a value which uniquely identifies it as a memory data packet.

All packets output by MHS contain a Telecommand Acknowledgement (TC Ack) field. This echoes the header information of a previous command, a count of commands received, and reports the validity of the command. This allows command verification. Packets on the CT Bus acknowledge commands received on the CT Bus; packets on the SD Bus acknowledge commands received on the SD Bus. The TC Ack field acknowledges the first command that was received since MHS last outputted a packet.

Astrium Ltd owns the copyright of this document which is supplied in confidence and which shall not be used for any purpose other than that for which it is supplied and shall not in whole or in part be reproduced, copied, or communicated to any person without written permission from the owner.

For example:-

Scan Control Period	Commands Issued to MHS	Packets Output by MHS	TC Ack Field acknowledges...
1	1. Request HK packet	HK Packet	Request HK Packet command Command Count = 1
2	1. Set Mode 2. Request HK Packet	None HK Packet	Set Mode command Command Count = 2
3	1. Set Time Code 2. Set Mode 3. Request HK Packet	None None HK Packet	Set Time Code command Command Count = 3
4	1. Set Mode	None	none
5	1. Request HK Packet	HK Packet	Set Mode command Command Count = 2

For this reason, it is recommended that only one command, in addition to the request packet command, is issued per Scan Control Period (assuming a packet request is made every Scan Control Period) so that all commands are explicitly verified.

The Instrument has a 3 packet buffer for the CT Bus and a 3 packet buffer for the SD Bus. The packet request command contains a 'datation' parameter which determines which packet in the buffer will be output, as shown in Table 6.6.1-1.

Request received in Scan Period	Packet Request Datation Parameter	Data in Packet is for Scan Period	Terminology
n	0	n-1	most recent
n+1	1	n	next most recent
n+2	2	n+1	next-next most recent

Table 6.6.1-1 Packet Datation

The platform has the option of collecting a packet every scan period, or collecting a group of three packets every 8 seconds. The datation parameter above also allows retransmission of a packet in the event of an error (eg. packet checksum verification failure or 1553 message error).

If a HK TLM Packet is collected every Scan Period on the Command/Telemetry Bus the mean data rate is 90 bits/sec.

If a Science Data Packet is collected every Scan Period on the Science Data Bus then the mean data rate is 3900 bits/sec.

Astrium Ltd owns the copyright of this document which is supplied in confidence and which shall not be used for any purpose other than that for which it is supplied and shall not in whole or in part be reproduced, copied, or communicated to any person without written permission from the owner.

Note that the SD Bus has a significantly higher data rate than the CT Bus. Although the two 1553 busses have the same data rate capacity (1Mbit/sec), the packets on the CT Bus are restricted in size in order to meet the data rate capacity of the spacecraft telemetry downlink.

For this reason, telemetry data has been made available on the SD Bus so that all data is available on the ground for off-line analysis and archiving. Full housekeeping data is included in the Science Data Packet, whereas only a subset of the data is included in the HK Packet. Data in the HK Packet is sub-commutated on a 7 packet cycle. Extended test data and memory data is also available on the SD Bus.

Astrium Ltd owns the copyright of this document which is supplied in confidence and which shall not be used for any purpose other than that for which it is supplied and shall not in whole or in part be reproduced, copied, or communicated to any person without written permission from the owner.

6.6.2 CT Bus

6.6.2.1 Introduction

The Command/Telemetry (CT) Bus is used for general instrument commanding and acquisition of housekeeping and diagnostic data. There are 10 types of command packet (see 6.6.2.2) and 3 types of telemetry packet (see 6.6.2.3).

The commands allow the operation of the the Instrument to be controlled, such as requesting mode changes, activation of discrete switches, changing the value of software parameters, setting the on-board time, etc. In addition, there are commands which request MHS to output a packet, such as Request HK Packet, Request Memory Data Packet.

During all powered modes of operation except Self-Test Mode, the Instrument generates a HK Packet every Scan Period. This packet contains housekeeping data such as temperature, current and power, mode of operation, switch status, fault status, etc. In Self-Test Mode, a Test Packet is generated which contains test data depending on the type of test requested.

6.6.2.2 CT Bus Command Packets

The Instrument receives CCSDS format serial commands on the Command/Telemetry Bus.
There are 10 types of commands which are used for general MHS Instrument control and monitoring, and diagnostic activities if required.

The commands are listed in Table 6.6.2.2-1.

Command Name	Command Mnemonic	Full Description	TLM Verification Reference	Minimum time between command and telemetry verification
Set Mode	TC_STM	6.6.2.2.1	HK3:1, SD3:1	8 seconds
Switch Command	TC_SWC	6.6.2.2.2	HK6,SD6	5.333 seconds
Read Telemetry	TC_RTM	6.6.2.2.3	HK4	0.1 seconds
Request HK TLM Packet	TC_RHK	6.6.2.2.4	HK4	0.1 seconds
Set Fixed View Position	TC_FVP	6.6.2.2.5	SD11:1:6 to SD13:4:6	5.333 seconds
Fixed View Step	TC_FVS	6.6.2.2.6	SD11:1:6 to SD13:4:6	5.333 seconds
Load Memory	TC_LDM	6.6.2.2.7	HK4	0.1 seconds
Set Time Code	TC_STC	6.6.2.2.8	HK2, SD2	10.667 seconds
Load Table Data	TC_LTD	6.6.2.2.9	HK4	0.1 seconds
Request Memory Data Packet	TC_RMD	6.6.2.2.10	HK4	0.1 seconds

Table 6.6.2.2-1 CT Bus Command Packets

The format of the commands is given in AD1.

The legality of the commands versus MHS Instrument Mode of operation is given in Table 6.6.2.2-2.

Astrium Ltd owns the copyright of this document which is supplied in confidence and which shall not be used for any purpose other than that for which it is supplied and shall not in whole or in part be reproduced, copied, or communicated to any person without written permission from the owner.

	Power-on	Warm-up	Standby	Scan	Fixed View	Self-test	Safeing	Fault
Set Mode	Y	Y	Y	Y	Y	Y	N	Y
Switch Command	Y	Y	Y	N	N	N	N	Y
Read Telemetry	Y	Y	Y	N	N	N	N	Y
Request HK TLM Packet	Y	Y	Y	Y	Y	Y	Y	Y
Set Fixed View Position	N	N	Y	N	Y	Y	N	N
Fixed View Step	N	N	N	N	Y	Y	N	N
Load Memory	Y	Y	Y	N	N	N	N	Y
Set Time Code	Y	Y	Y	N	N	N	N	N
Load Table Data	Y	Y	Y	Y	Y	Y	N	Y
Request Memory Data Packet	Y	Y	Y	N	N	N	N	Y

Table 6.6.2.2-1 CT Bus Command Legality

In addition to these mode dependent legalities, the following specific legalities are implemented by the MINOS:-

- The 'LO A/B Select' switch commands are illegal when the corresponding channel is already on.
- Operational Heater switch commands are illegal when 'Automatic Heater Control' is selected.
- The 'Rx Operationl Heater' switch command is legal provided the ICT indicates that the Rx Operational heaters are the current redundancy. Likewise, the 'Aux Operationl Heater' switch command is legal provided the ICT indicates that the Aux Operational heaters are the current redundancy.
- Load Table Data commands are legal in all modes, but changing a table parameter may not take immediate effect, depending on the type of parameter and the current mode.

6.6.2.2.1 Set Mode

This command is used to change the mode of operation of the MHS Instrument. These Modes are defined in Section 4.1. The Mode Code Field in the command defines which mode is requested. Note that only legal mode transitions, as shown in Figure 4.1-1, will be accepted. Illegal mode transitions will be flagged as illegal in the Telecommand Acknowledgement Field of the HK Telemetry.

If Self-test Mode is requested, then a further subfield in the command defines which type of Self-test is to be performed, and whether the test routine is to be repeated indefinitely (until another Set Mode command) or only once, after which an automatic transition is made back to the original mode. Further sub-types and input parameters for the self-test routines are defined in the ICT.

Note that there are other ways in which the MHS Instrument can change mode as follows:

- In response to a Discrete Safe Mode command; transition to Safeing Mode
- When a fault is detected; transition to Fault Mode
- When 'automatic mode change' flag in ICT is enabled, whereupon a transition occurs either after a given time or when temperature telemetry conditions are met (see Power-on and Warm-up mode descriptions in section 4.1)
- After 'single shot' self tests

6.6.2.2.2 Switch Command

Astrium Ltd owns the copyright of this document which is supplied in confidence and which shall not be used for any purpose other than that for which it is supplied and shall not in whole or in part be reproduced, copied, or communicated to any person without written permission from the owner.

This command allows the activation of an MHS Instrument internal command channel. These are divided into 3 groups: HL commands, steady state, BIM (Inter-module bus; ie. commands internal to the EE). These groups are listed in section 5.7. The command identifies the group, channel number, and state (where applicable) of the command.

Note that all command channels are also controlled automatically by the MHS Instrument software, particularly on mode transitions.

6.6.2.2.3 Read Telemetry

This command is intended for diagnostic purposes. It allows a specific MHS internal telemetry channel to be read. The telemetry channels are divided into 6 groups: switch status, bi-level status, BIM status (Inter-module bus; ie. internal to the EE), temperature, current, high precision temperature. These groups are listed in section 5.8. The command identifies the group and channel number of the telemetry.

Upon receiving this command, the MHS Instrument reads the telemetry and places it in a known location of processor memory. A 'Request Memory Data Packet' is then required to collect the data over the 1553 interface.

Note that the MHS Instrument generates HK Telemetry Packets at 8/3 second intervals which contain telemetry data. The data in this packet is sub-commutated over 7 packets, so all channels are received in an 7x8/3=18.67 second period. The 'Read Telemetry' command can be used if a particular channel is required sooner than this. Note also that full HK telemetry (ie all telemetry channels) are included in every Science Data Packet (ie 8/3 seconds intervals) which is collected on the SD Bus.

6.6.2.2.4 Request HK Telemetry

This command instructs the MHS Instrument to place a HK Telemetry Packet into the 1553 buffer for collection. The MHS Instrument generates these packets at 8/3 second intervals, synchronised to the 8SP signal. The detailed protocol for packet collection is described in AD1 Appendix E.

The MHS Instrument can store the 3 latest packets generated, and the command has a datation field which specifies whether the 'most recent', 'next most recent', or 'next-next most recent' packet is required. At 8/3 second intervals, synchronised to the 8SP, a new packet is generated, so the 'most recent' becomes the 'next most recent' and the 'next most recent' becomes the 'next-next most recent'.

This feature allows packets to be collected asynchronously, and if desired, 3 packets can be collected in quick succession followed by an 8 second delay before the next 3 are collected. It also allows a packet to be collected more than once in the event of data corruption/loss during the collection process.

If this command is issued when the MHS Instrument is in Self-test Mode then a Test Data Packet is returned instead of HK Telemetry Packet. HK Telemetry is not collected during Self-test Mode.

6.6.2.2.5 Set Fixed View Position

This command is specific to the Fixed View Mode operation. When this command is received in Fixed View Mode (or Self-test[Fixed View Mode]) the Reflector is moved to the position defined by

Astrium Ltd owns the copyright of this document which is supplied in confidence and which shall not be used for any purpose other than that for which it is supplied and shall not in whole or in part be reproduced, copied, or communicated to any person without written permission from the owner.

the command. There is no limit to the number of times the position can be changed. If this command is sent in Standby Mode, the position is stored and the Reflector will move to this position when Fixed View Mode is next selected.

6.6.2.2.6 Fixed View Position Step

This command is specific to Fixed View Mode operation. When this command is received in Fixed View Mode (or Self-test[Fixed View Mode]) the Reflector is moved by a relative amount as defined by the command. The step size is in multiples of 1/10th of a pixel field of view (10/9°) and can be forwards or backwards. The maximum step size is 14.11°. There is no limit to the number of times the position can be changed.

6.6.2.2.7 Load Memory

This command is provided for diagnostic operations. It allows any area of the processor memory to be changed. The command defines the start address of a block of 4 16-bit words, plus the four data values which are to be written into memory. This allows code and data areas of the software to be changed during flight.

6.6.2.2.8 Set Time Code

This command defines a new value of the MHS Instrument on-board time which is used for datation of all data generated by the MHS Instrument (HK telemetry, science data, test data, memory data). The clock is set to the value defined by the command on the next occurrence of the 8SP signal. At MHS Instrument switch-on, the clock is set to zero.

6.6.2.2.9 Load Table Data

This command is used to change the contents of the software tables to a value different to the default values stored in PROM. At MHS Instrument switch-on, all tables are initialised to the PROM values.

See section 8 for a desciption of the usage of these tables, and AD1 Appendices A, B, C and D for the format of the tables.

The command gives the table reference number (0..3), the data reference number, and the actual data (4 octets). One data reference consists of 4 octets, which can represent a single floating point number, or different combinations of 16 and 8 bit numbers, and octets with bitwise significance.

6.6.2.2.10 Request Memory Packet

This commands allows the contents of the MHS Instrument processor memory to be read. The MHS Instrument places the contents of a 4 x 16 bit word block of memory into the 1553 buffer for collection. The command defines the start address of the memory block. The detailed protocol for packet collection is described in AD1 Appendix E.

Note that the equivalent command is provided on the Science Data Bus and this allows the contents of a 512 x 16 bit word block of memory to be read.

Astrium Ltd owns the copyright of this document which is supplied in confidence and which shall not be used for any purpose other than that for which it is supplied and shall not in whole or in part be reproduced, copied, or communicated to any person without written permission from the owner.

6.6.2.3 C/T Bus Telemetry Packets

The Instrument generates packets on the CT Bus as shown in Table 6.6.2.3-1.

Packet Name	Total Packet Length (octets)	Packet generation	Packet output	Full description
HK TLM Packet (HKP)	30	once per Scan Period	On receipt of 'Request HK TLM Packet' command	section 6.6.2.3.1
Test Data Packet (TDP)	30	once per Scan Period when in Self-Test Mode	On receipt of 'Request HK TLM Packet' command (when in Self-Test Mode)	section 6.6.2.3.2
Memory Data Packet (MDP)	26	On receipt of 'Request Memory Data Packet' command	On receipt of 'Request Memory Data Packet' command	Section 6.6.2.3.3

Table 6.6.2.3-1 CT Bus Telemetry Packets

6.6.2.3.1 Housekeeping Packet

MHS generates a Housekeeping Packet every Scan Period (2.6667 sec). The HK Packet complies with the CCSDS standard and is 30 octets long. The packet format is defined in AD1. A summary of the format is shown in Table 6.6.2.3.1-1.

Octet	Reference	Field name
1 to 6	HK1	CCSDS Primary Header (Application ID, Packet Sequence Count)
7 to 12	HK2	CCSDS Secondary Header (Time Code)
13	HK3	MHS Mode Code/PIE ID/Sub Commutation Code
14 to 17	HK4	Telecommand Acknowledgement Field
18	HK5	Fault Code
19 to 21	HK6	Switch Status Telemetry
22 to 25	HK7	Thermistor Telemetry
26 to 28	HK8	Current/Power Telemetry
29,30	HK9	Checksum

Table 6.6.2.3.1-1 Summary of HK Packet Format

Most of the information available in the HK Packet is also available in the Science Data Packet (see section 6.6.3.3.1).

A summary of the data in an HK Packet is given in Table 6.6.2.3.1-2. Full details are provided in AD1.

Astrium Ltd owns the copyright of this document which is supplied in confidence and which shall not be used for any purpose other than that for which it is supplied and shall not in whole or in part be reproduced, copied, or communicated to any person without written permission from the owner.

Reference	Name	TLM Source	Acq'n Time (note 1)
HK1:1	CCSDS Packet Version	S/W	T
HK1:2	CCSDS Packet Type	S/W	T
HK1:3	Secondary Header Flag	S/W	T
HK1:4	Application Process	S/W	T
HK1:5	Segment Flags	S/W	T
HK1:6	Source Sequence Count	S/W	T
HK1:7	Packet Length	S/W	T
HK2:1	Coarse Time Code	S/W	T
HK2:2	Fine Time Code	S/W	T
HK3:1	Mode Code	S/W	T
HK3:2	PIE ID	S/W	T
HK3:3	Sub-commutation Code	S/W	T
HK3:4	Self-Test Code	S/W	T
HK4:1	TC Acknowledgement: TC Clean Flag	S/W	T
HK4:2	TC Acknowledgement: TC Conforms Flag	S/W	T
HK4:3	TC Acknowledgement: TC Recognised Flag	S/W	T
HK4:4	TC Acknowledgement: TC Legal Flag	S/W	T
HK4:5	TC Acknowledgement: TC Application ID	S/W	T
HK4:6	TC Acknowledgement: TC Packet Sequence	S/W	T
HK4:7	TC Acknowledgement: TC Received Count	S/W	T
HK5:1	Fault Code: Current Monitor	S/W	T
HK5:2	Fault Code: Thermistor Monitor	S/W	T
HK5:3	Fault Code: Switch Fault	S/W	T
HK5:4	Fault Code: Processor Fault	S/W	T
HK5:5	Fault Code: DC Offset Error	S/W	T
HK5:6	Fault Code: Scan Control Error	S/W	T
HK5:7	Fault Code: Ref Clock Error	S/W	T
HK5:8	Fault Code: RDM Motor Trip	EE	T
HK5:9	Fault Code: FDM Motor Trip	EE	T
HK5:10	Fault Code: PROM Switch Error	EE	T
HK6	Switch Status Telemetry:- • TM1:1 to TM1:11 • TM2:1 to TM2:4 • TM3:4 to TM3:11	EE, Rx, SM	T
HK7	Thermistor Telemetry (sub-commutated):- • TM4:1 to TM4:4 (when HK3:3=1) • TM4:5 to TM4:8 (when HK3:3=2) • TM4:9 to TM4:12 (when HK3:3=3) • TM4:13 to TM4:16 (when HK3:3=4) ○ TM4:17 to TM4:19, TM4:24 (when HK3:3=5) • TM4:20 to TM4:23 (when HK3:3=6) • TM6:2 to TM6:5 (when HK3:3=7)	EE, Rx, SM, b'plate	T+dt
HK8:1	+5V current (TM5:3)	EE	T+dt
HK8:2	Rx Global power (TM5:4,TM5:5,TM5:6)	S/W	T+dt
HK8:3	Total Motor Current (TM5:1+TM5:2)	S/W	T+dt
HK9	Checksum	S/W	T

note 1 : T = Time Code of this packet (ie HK2). dt=provided in Table 6.8.x-1.
Refer to section 6.8 for definition of TMn:m references.

Table 6.6.2.3.1-2 Summary of Telemetry Parameters in an HK Packet

Astrium Ltd owns the copyright of this document which is supplied in confidence and which shall not be used for any purpose other than that for which it is supplied and shall not in whole or in part be reproduced, copied, or communicated to any person without written permission from the owner.

6.6.2.3.2 Test Data Packet

MHS generates a Test Data Packet (TDP) every Scan Period (2.6667 sec) when in Self-Test Mode. This packet is transferred to the platform on the C/T Bus in response to the 'Request HK TLM Packet' command received on the C/T Bus.

The TDP complies with the CCSDS standard and is 30 octets long. The packet format is defined in AD1. A summary of the format is given in Table 6.6.2.3.2-1.

Octet	Reference	Field name
1 to 6	TD1	CCSDS Primary Header (Application ID, Packet Sequence Count)
7 to 12	TD2	CCSDS Secondary Header (Time Code)
13	TD3	MHS Mode Code/PIE ID/Self-Test Code
14 to 28	TD4	Test Data
29,30	TD5	Checksum

Table 6.6.2.3.2-1 Summary of Test Data Packet Format

The contents of the Test Data Field (TD4) depend on the Self-Test Code (TD3). Full details are provided in AD1.

Additional test data is available in the Extended Test Data Packet which is transferred on the SD Bus (refer to section 6.6.3.3.2).

6.6.2.3.3 Memory Data Packet

MHS generates a Memory Data Packet (MDP) upon receipt of a 'Request Memory Data Packet' command received on the C/T Bus. The MDP is transferred to the platform on the C/T Bus.

The MDP complies with the CCSDS standard and is 26 octets long. The packet format is defined in AD1. A summary of the format is given in 6.6.2.3.3-1.

Octet	Reference	Field name
1 to 6	MD1	CCSDS Primary Header (Application ID, Packet Sequence Count)
7 to 12	MD2	CCSDS Secondary Header (Time Code)
13	MD3	Memory Packet ID/PIE ID
14,15,16	MD4:1	Memory Address
17 to 24	MD4:2	Memory Data (4 x 16 bit words)
25,26	MD5	Checksum

Table 6.6.2.3.3-1 Summary of Test Data Packet Format

Full details of the Memory Data Field (MD4) are provided in AD1.

Additional memory data is available in the Extended Memory Data Packet which is transferred on the SD Bus (refer to section 6.6.3.3.3).

Astrium Ltd owns the copyright of this document which is supplied in confidence and which shall not be used for any purpose other than that for which it is supplied and shall not in whole or in part be reproduced, copied, or communicated to any person without written permission from the owner.

6.6.3 Science Data Bus

6.6.3.1 Introduction

During all powered modes of operation the Instrument generates packets which are available for collection on the Science Data (SD) Bus. In Scan Mode and Fixed View Mode, Science Data Packets are generated which contain the complete set of data for radiometric analysis plus a full set of housekeeping telemetry. In other modes, the packets only contain the housekeeping data. In Self-test modes Extended Test Packets are generated whose contents depend on the type of test performed. Extended Memory Data Packets may also be acquired which are intended for diagnostic purposes.

In Scan Mode the Scientific Data comprises:-

- 90 Earth View pixel data fields
- 4 Space View pixel data fields
- 4 OBCT View pixel data fields
- 5 temperature readings of the OBCT + 3 calibration resistor readings
- Various status information relating to Instrument configuration and validity of the data

Each pixel data field comprises:-

- Motor position recorded at the middle of the pixel integration period
- Radiometric data corresponding to the scene temperature for each of the 5 Receiver channels

Astrium Ltd owns the copyright of this document which is supplied in confidence and which shall not be used for any purpose other than that for which it is supplied and shall not in whole or in part be reproduced, copied, or communicated to any person without written permission from the owner.

6.6.3.2 SD Bus Command Packets

There are 2 types of commands on this bus which are used to request data from the MHS Instrument.

The commands are listed in Table 6.6.3.2-1.

Command Name	Command Mnemonic	Full Description	TLM Verification Reference	Minimum time between command and telemetry verification
Request SD Packet	SD_RSD	6.6.3.2.1	SD4	0.1 seconds
Request Extended Memory Data Packet	SD_REM	6.6.3.2.2	SD4	0.1 seconds

Table 6.6.3.2-1 SD Bus Command Packets

The format of the commands is given in AD1.

The validity of commands in the different Instrument modes of operation are given in Table 6.6.3.2-2.

	Power -on	Warm -up	Standby	Scan	Fixed View	Self-test	Safeing	Fault
Request SD Packet	Y	Y	Y	Y	Y	Y	Y	Y
Request Extended Memory Data Packet	Y	Y	Y	N	N	N	N	Y

Table 6.6.3.2-2 SD Bus Command Validity

6.6.3.2.1 Request Science Data packet

This command instructs the MHS Instrument to place a Science Data Packet into the 1553 buffer for collection. The MHS Instrument generates these packets at 8/3 second intervals, synchronised to the 8SP signal. The packet only contains science data when the MHS Instrument is in Scan Mode or Fixed View Mode. In other modes, the science data fields of the packet are set to zero. The detailed protocol for packet collection is described in AD1 Appendix E.

The MHS Instrument can store the 3 latest packets generated, and the command has a datation field which specifies whether the 'most recent', 'next most recent', or 'next-next most recent' packet is required. At 8/3 second intervals, synchronised to the 8SP, a new packet is generated, so the 'most recent' becomes the 'next most recent' and the 'next most recent' becomes the 'next-next most recent'.

This feature allows packets to be collected asynchronously, and if desired, 3 packets can be collected in quick succession followed by an 8 second delay before the next 3 are collected. It also allows a packet to be collected more than once in the event of data corruption/loss during the collection process.

Astrium Ltd owns the copyright of this document which is supplied in confidence and which shall not be used for any purpose other than that for which it is supplied and shall not in whole or in part be reproduced, copied, or communicated to any person without written permission from the owner.

If this command is issued when the MHS Instrument is in Self-test Mode then an Extended Test Data Packet is returned instead of Science Data Packet. Science Data Packets are not generated during Self-test Mode.

6.6.3.2.2 Request Extended Memory Packet

This commands allows the contents of the MHS Instrument processor memory to be read. The MHS Instrument places the contents of a 512 x 16 bit word block of memory into the 1553 buffer for collection. The command defines the start address of the memory block. The detailed protocol for packet collection is described in AD1 Appendix E.

Note that the equivalent command is provided on the Command/Telemetry Bus and this allows the contents of a 4 x 16 bit word block of memory to be read.

Astrium Ltd owns the copyright of this document which is supplied in confidence and which shall not be used for any purpose other than that for which it is supplied and shall not in whole or in part be reproduced, copied, or communicated to any person without written permission from the owner.

6.6.3.3 Science Data Bus Data Packets

The Instrument generates packets on the SD Bus as shown Table 6.6.3.3-1.

Packet Name	Total Packet Length (octets)	Packet generation	Packet output	Full description
Science Data Packet (SDP)	1300	once per Scan Period	On receipt of 'Request SD Packet' command	Section 6.6.3.3.1
Extended Test Data Packet (ETDP)	1300	once per Scan Period when in Self-Test Mode	On receipt of 'Request SD Packet' command (when in Self-Test Mode)	Section 6.6.3.3.2
Extended Memory Data Packet (EMDP)	1042	On receipt of 'Request Extended Memory Data Packet' command	On receipt of 'Request Extended Memory Data Packet' command	Section 6.6.3.3.3

Table 6.6.3.3-1 Science Data Bus Packets

Astrium Ltd owns the copyright of this document which is supplied in confidence and which shall not be used for any purpose other than that for which it is supplied and shall not in whole or in part be reproduced, copied, or communicated to any person without written permission from the owner.

6.6.3.3.1 Science Data Packet

MHS generates a Science Data (SD) Packet every Scan Period (2.6667 sec). The SD Packet complies with the CCSDS standard and is 1300 octets long. The packet format is defined in AD1. A summary of the format is given in Table 6.6.3.3.1-1.

Octet	Reference	Field name
1 to 6	SD1	CCSDS Primary Header (Application ID, Packet Sequence Count)
7 to 12	SD2	CCSDS Secondary Header (Time Code)
13	SD3	MHS Mode Code/PIE ID/Sub Commutation Code
14 to 17	SD4	Telecommand Acknowledgement Field
18	SD5	Fault Code
19 to 21	SD6	Switch Status Telemetry
22 to 45	SD7	Thermistor Telemetry
46 to 51	SD8	Current Telemetry
52	SD9	Science Data Status Word
53 to 61	SD10	Signal Processing Status
62 to 1141	SD11	Earth View Pixel Data
1142 to 1189	SD12	Space View Pixel Data
1190 to 1237	SD13	OBCT View Pixel Data
1238 to 1253	SD14	PRT Data
1254 to 1298	SD15	Unused
1299,1300	SD16	Checksum

Table 6.6.3.3.1-1 Summary of SD Packet Format

A subset of the data in the SD Packet is available in the HK Packet (see section 5.6.2.3.1)

A summary of the data in an SD Packet is given in Table 6.6.3.3.1-2. Full details are provided in AD1.

Reference	Name	TLM Source	Acq'n Time (note 1)
SD1:1	CCSDS Packet Version	S/W	T
SD1:2	CCSDS Packet Type	S/W	T
SD1:3	Secondary Header Flag	S/W	T
SD1:4	Application Process	S/W	T
SD1:5	Segment Flags	S/W	T
SD1:6	Source Sequence Count	S/W	T
SD1:7	Packet Length	S/W	T
SD2:1	Coarse Time Code	S/W	T
SD2:2	Fine Time Code	S/W	T
SD3:1	Mode Code	S/W	T
SD3:2	PIE ID	S/W	T

Astrium Ltd owns the copyright of this document which is supplied in confidence and which shall not be used for any purpose other than that for which it is supplied and shall not in whole or in part be reproduced, copied, or communicated to any person without written permission from the owner.

Reference	Name	TLM Source	Acq'n Time (note 1)
SD3:3	Sub-commutation Code	S/W	T
SD3:4	Self-Test Code	S/W	T
SD4:1	TC Acknowledgement: TC Clean Flag	S/W	T
SD4:2	TC Acknowledgement: TC Conforms Flag	S/W	T
SD4:3	TC Acknowledgement: TC Recognised Flag	S/W	T
SD4:4	TC Acknowledgement: TC Legal Flag	S/W	T
SD4:5	TC Acknowledgement: TC Application ID	S/W	T
SD4:6	TC Acknowledgement: TC Packet Sequence	S/W	T
SD4:7	TC Acknowledgement: TC Received Count	S/W	T
SD5:1	Fault Code: Current Monitor	S/W	T
SD5:2	Fault Code: Thermistor Monitor	S/W	T
SD5:3	Fault Code: Switch Fault	S/W	T
SD5:4	Fault Code: Processor Fault	S/W	T
SD5:5	Fault Code: DC Offset Error	S/W	T
SD5:6	Fault Code: Scan Control Error	S/W	T
SD5:7	Fault Code: Ref Clock Error	S/W	T
SD5:8	Fault Code: RDM Motor Trip	EE	T
SD5:9	Fault Code: FDM Motor Trip	EE	T
SD5:10	Fault Code: PROM Switch Error	EE	T
SD6	Switch Status Telemetry:- (note 3) • TM1:1 to TM1:11 • TM2:1 to TM2:4 • TM3:4 to TM3:11	EE, Rx, SM	T
SD7	Thermistor Telemetry (note 3) • TM4:1 to TM4:24	EE, Rx, SM, b'plate	T+dt
SD8:1	+5V current (TM5:3) (note 3)	EE	T+dt
SD8:2	+8V current (TM5:4)	Rx	T+dt
SD8:3	+15V current (TM5:5)	Rx	T+dt
SD8:4	-15V current (TM5:6)	Rx	T+dt
SD8:5	RDM Motor Current (TM5:1)	SM	T+dt
SD8:6	FDM Motor Current (TM5:2)	SM	T+dt
SD9:1	DC Offset Valid Flag	S/W	T
SD9:2	Scan Control Valid Flag	S/W	T
SD9:3	Profile Number	S/W	T
SD10:1	H1 DC Offset	EE	T
SD10:2	H2 DC Offset	EE	T
SD10:3	H3 DC Offset	EE	T
SD10:4	H4 DC Offset	EE	T
SD10:5	H5 DC Offset	EE	T
SD10:6	H1 Valid Flag	S/W	T
SD10:7	H2 Valid Flag	S/W	T
SD10:8	H3 Valid Flag	S/W	T
SD10:9	H4 Valid Flag	S/W	T
SD10:10	H5 Valid Flag	S/W	T
SD10:11	SPE Mux Code	EE	T

Astrium Ltd owns the copyright of this document which is supplied in confidence and which shall not be used for any purpose other than that for which it is supplied and shall not in whole or in part be reproduced, copied, or communicated to any person without written permission from the owner.

Reference	Name	TLM Source	Acq'n Time (note 1)
SD10:12	H1 Gain	Rx	T
SD10:13	H2 Gain	Rx	T
SD10:14	H3 Gain	Rx	T
SD10:15	H4 Gain	Rx	T
SD10:16	H5 Gain	Rx	T
SD11:1:1	Earth Pixel 1, H1 Data (note 4)	Rx	T+0.5/54
SD11:1:2	Earth Pixel 1, H2 Data	Rx	T+0.5/54
SD11:1:3	Earth Pixel 1, H3 Data	Rx	T+0.5/54
SD11:1:4	Earth Pixel 1, H4 Data	Rx	T+0.5/54
SD11:1:5	Earth Pixel 1, H5 Data	Rx	T+0.5/54
SD11:1:6	Earth Pixel 1, Mid-Pixel position	EE	T+0.5/54
SD11:2:1..6	Earth Pixel 2 Data	Rx/EE	T+1.5/54
SD11:3:1..6	Earth Pixel 3 Data	Rx/EE	T+2.5/54
SD11:4:1..6 to SD11:90:1..6	Earth Pixel 4 Data to Earth Pixel 90 Data	Rx/EE	T+(p-0.5)/54 (p=pixel number)
SD12:1:1	Space View Pixel 1, H1 Data (note 4)	Rx	$T+T_C+0.5/54$
SD12:1:2	Space View Pixel 1, H2 Data	Rx	$T+T_C+0.5/54$
SD12:1:3	Space View Pixel 1, H3 Data	Rx	$T+T_C+0.5/54$
SD12:1:4	Space View Pixel 1, H4 Data	Rx	$T+T_C+0.5/54$
SD12:1:5	Space View Pixel 1, H5 Data	Rx	$T+T_C+0.5/54$
SD12:1:6	Space View Pixel 1, Mid-Pixel position	EE	$T+T_C+0.5/54$
SD12:2:1..6	Space View Pixel 2 Data	Rx/EE	$T+T_C+1.5/54$
SD12:3:1..6	Space View Pixel 3 Data	Rx/EE	$T+T_C+2.5/54$
SD12:4:1..6	Space View Pixel 4 Data	Rx/EE	$T+T_C+3.5/54$
SD13:1:1	OBCT View Pixel 1, H1 Data (note 4)	Rx	$T+T_H+0.5/54$
SD13:1:2	OBCT View Pixel 1, H2 Data	Rx	$T+T_H+0.5/54$
SD13:1:3	OBCT View Pixel 1, H3 Data	Rx	$T+T_H+0.5/54$
SD13:1:4	OBCT View Pixel 1, H4 Data	Rx	$T+T_H+0.5/54$
SD13:1:5	OBCT View Pixel 1, H5 Data	Rx	$T+T_H+0.5/54$
SD13:1:6	OBCT View Pixel 1, Mid-Pixel position	EE	$T+T_H+0.5/54$
SD13:2:1..6	OBCT View Pixel 2 Data	Rx/EE	$T+T_H+1.5/54$
SD13:3:1..6	OBCT View Pixel 3 Data	Rx/EE	$T+T_H+2.5/54$
SD13:4:1..6	OBCT View Pixel 4 Data	Rx/EE	$T+T_H+3.5/54$
SD14:1	PRT 1 Data (TM6:1)	OBCT	T+dt
SD14:2	PRT 2 Data (TM6:2)	OBCT	T+dt
SD14:3	PRT 3 Data (TM6:3)	OBCT	T+dt
SD14:4	PRT 4 Data (TM6:4)	OBCT	T+dt
SD14:5	PRT 5 Data (TM6:5)	OBCT	T+dt
SD14:6	PRT CAL 1 (118Ω) Data (TM6:6)	OBCT	T+dt
SD14:7	PRT CAL 2 (95.3Ω) Data (TM6:7)	OBCT	T+dt
SD14:8	PRT CAL3 (80.6Ω) Data (TM6:8)	OBCT	T+dt
SD15	Unused	n/a	n/a
SD16	Checksum	S/W	T

Astrium Ltd owns the copyright of this document which is supplied in confidence and which shall not be used for any purpose other than that for which it is supplied and shall not in whole or in part be reproduced, copied, or communicated to any person without written permission from the owner.

note 1 : T = Time Code of this packet (ie SD2). dt=provided in Tables 6.8.x-1

note 2:
For SD12: value of T_C depends on the Profile Number (SD9:3):-
If Profile = 0 then T_C=784/432 = 1.8148 seconds
If Profile = 1 then T_C=776/432 = 1.7963 seconds
If profile = 2 then T_C=792/432 = 1.8333 seconds
If Profile = 3 then T_C=user defined.
For SD13: T_H=116/54 = 2.1481 seconds

note 3: Refer to section 6.8 for definition of TMn:m references.

note 4: the order of the data for each pixel is different to the actual SD packet format. This table does not define the packet format (refer to TMTC Directory, AD1, for packet format)

Table 6.6.3.3.1-2 Summary of Telemetry Parameters in a SD Packet

Astrium Ltd owns the copyright of this document which is supplied in confidence and which shall not be used for any purpose other than that for which it is supplied and shall not in whole or in part be reproduced, copied, or communicated to any person without written permission from the owner.

6.6.3.3.2 Extended Test Data Packet

MHS generates an Extended Test Data Packet (ETDP) every Scan Period (2.6667 sec) when in Self-Test Mode. This packet is transferred to the platform on the SD Bus in response to the 'Request SD Packet' command received on the SD Bus.

The ETDP complies with the CCSDS standard and is 1300 octets long. The packet format is defined in AD1. A summary of the format is given in Table 6.6.3.3.2-1.

Octet	Reference	Field name
1 to 6	ETD1	CCSDS Primary Header (Application ID, Packet Sequence Count)
7 to 12	ETD2	CCSDS Secondary Header (Time Code)
13	ETD3	MHS Mode Code/PIE ID/Self-Test Code
14 to 1298	ETD4	Extended Test Data
1299,1300	ETD5	Checksum

Table 6.6.3.3.2-1 Summary of Extended Test Data Packet Format

The contents of the Extended Test Data Field (ETD4) depend on the Self-Test Code (ETD3). Full details are provided in AD1.

A subset of the extended test data is available in the Test Data Packet which is transferred on the CT Bus (refer to section 6.6.2.3.2).

6.6.3.3.3 Extended Memory Data Packet

MHS generates an Extended Memory Data Packet (MDP) upon receipt of a 'Request Memory Data Packet' command received on the SD Bus. The EMDP is transferred to the platform on the SD Bus.

The EMDP complies with the CCSDS standard and is 1042 octets long. The packet format is defined in AD1. A summary of the format is given in Table 6.6.3.3.3-1.

Octet	Reference	Field name
1 to 6	EMD1	CCSDS Primary Header (Application ID, Packet Sequence Count)
7 to 12	EMD2	CCSDS Secondary Header (Time Code)
13	EMD3	Memory Packet ID/PIE ID
14,15,16	EMD4:1	Memory Address
17 to 1040	EMD4:2	Extended Memory Data (512 x 16 bit words)
1041,1042	EMD5	Checksum

Table 6.6.3.3.3-1 Summary of Extended Memory Data Packet Format

Full details of the Extended Memory Data Field (EMD4) are provided in AD1.

A subset of the extended memory data is available in the Memory Data Packet which is transferred on the CT Bus (refer to section 6.6.2.3.3).

Astrium Ltd owns the copyright of this document which is supplied in confidence and which shall not be used for any purpose other than that for which it is supplied and shall not in whole or in part be reproduced, copied, or communicated to any person without written permission from the owner.

6.7 Internal Commands

Internal commands are commands which are issued by the EE to control various functions within the Instrument. These commands may be issued as a result of the telecommand 'Switch Command' (TC_SWC), or as a result of a MINOS action (eg. mode change).

Internal commands are divided into 3 categories:-

Command category	Command Reference	Description
High Level (HL) Commands	CMD1:1 to CMD1:37	section 6.7.1
Steady State (SS) Commands	CMD2:1 to CMD2:4	section 6.7.2
BIM Register Commands	CMD3:1 to CMD3:11	section 6.7.3

Refer to Appendix A for figures showing the functionality of each command channel.

Astrium Ltd owns the copyright of this document which is supplied in confidence and which shall not be used for any purpose other than that for which it is supplied and shall not in whole or in part be reproduced, copied, or communicated to any person without written permission from the owner.

6.7.1 High Level (HL) commands

The HL commands are listed in Table 6.7.1-1.

These are nominally 14V, 16ms duration pulsed commands used to operate latching relays. Most switches are located in the Receiver and are used to switch on and off channels of the Receiver, select QBS redundancy and to set the IFBE gain levels. One switch is located in the EE and is used to switch on the Rx DC/DC Converter (RFCV). This switch is not a relay but is none-the-less operated by the HL pulsed commands.

The on/off and select A/B commands are self-explanatory. Note that for correct operation of channels H3 and H4 the Front-End and the relevant Back-End must be on. The Front-End QBS does not start to oscillate until the backend is switched on (a bias voltage from the back-end is required for the QBS to operate). Refer to section 4.2.3 for limitations in the usage of the select A/B commands.

The Rx Gain Control commands are used as follows:-

- Reset command : removes the 1dB and 2dB gain blocks from the amplifier
- 1dB command : adds the 1dB gain block to the amplifier
- 2dB command : adds the 2dB gain block to the amplifier

Therefore,:-
to set 0dB gain : issue Reset command
to set 1 dB gain : issue Reset then 1 dB commands
to set 2 dB gain : issue Reset then 2 dB commands
to set 3 dB gain :issue 1dB and 2dB commands (order not important, Reset command not required)

Reference	Command Name	Switch Location	TLM Verification	TLM Verif . delay
CMD1:1	H1 ON	Rx	TM1:1	5.333 sec
CMD1:2	H1 OFF	Rx	TM1:1	5.333 sec
CMD1:3	H1 Select LO A	Rx	TM1:2	5.333 sec
CMD1:4	H1 Select LO B	Rx	TM1:2	5.333 sec
CMD1:5	H2 ON	Rx	TM1:3	5.333 sec
CMD1:6	H2 OFF	Rx	TM1:3	5.333 sec
CMD1:7	H2 Select LO A	Rx	TM1:4	5.333 sec
CMD1:8	H2 Select LO B	Rx	TM1:4	5.333 sec
CMD1:9	H3/4 Frontend ON	Rx	TM1:5	5.333 sec
CMD1:10	H3/4 Frontend OFF	Rx	TM1:5	5.333 sec
CMD1:11	H3/4 Select LO A	Rx	TM1:6	5.333 sec
CMD1:12	H3/4 Select LO B	Rx	TM1:6	5.333 sec
CMD1:13	H3 Backend ON	Rx	TM1:7	5.333 sec
CMD1:14	H3 Backend OFF	Rx	TM1:7	5.333 sec
CMD1:15	H4 Backend ON	Rx	TM1:8	5.333 sec
CMD1:16	H4 Backend OFF	Rx	TM1:8	5.333 sec
CMD1:17	H5 ON	Rx	TM1:9	5.333 sec

Astrium Ltd owns the copyright of this document which is supplied in confidence and which shall not be used for any purpose other than that for which it is supplied and shall not in whole or in part be reproduced, copied, or communicated to any person without written permission from the owner.

Reference	Command Name	Switch Location	TLM Verification	TLM Verif . delay
CMD1:18	H5 OFF	Rx	TM1:9	5.333 sec
CMD1:19	H5 Select LO A	Rx	TM1:10	5.333 sec
CMD1:20	H5 Select LO B	Rx	TM1:10	5.333 sec
CMD1:21	RFCV ON	EE	TM1:11	5.333 sec
CMD1:22	RFCV OFF	EE	TM1:11	5.333 sec
CMD1:23	H1 Gain Reset	Rx	SD10:12	5.333 sec
CMD1:24	H1 Gain 1dB	Rx	SD10:12	5.333 sec
CMD1:25	H1 Gain 2dB	Rx	SD10:12	5.333 sec
CMD1:26	H2 Gain Reset	Rx	SD10:13	5.333 sec
CMD1:27	H2 Gain 1dB	Rx	SD10:13	5.333 sec
CMD1:28	H2 Gain 2dB	Rx	SD10:13	5.333 sec
CMD1:29	H3 Gain Reset	Rx	SD10:14	5.333 sec
CMD1:30	H3 Gain 1dB	Rx	SD10:14	5.333 sec
CMD1:31	H3 Gain 2dB	Rx	SD10:14	5.333 sec
CMD1:32	H4 Gain Reset	Rx	SD10:15	5.333 sec
CMD1:33	H4 Gain 1dB	Rx	SD10:15	5.333 sec
CMD1:34	H4 Gain 2dB	Rx	SD10:15	5.333 sec
CMD1:35	H5 Gain Reset	Rx	SD10:16	5.333 sec
CMD1:36	H5 Gain 1dB	Rx	SD10:16	5.333 sec
CMD1:37	H5 Gain 2dB	Rx	SD10:16	5.333 sec

Table 6.7.1-1 High Level Command List

Astrium Ltd owns the copyright of this document which is supplied in confidence and which shall not be used for any purpose other than that for which it is supplied and shall not in whole or in part be reproduced, copied, or communicated to any person without written permission from the owner.

6.7.2 Steady State Commands

The steady-state commands are listed in Table 6.7.2-1.

Steady-state commands are used to control active switches (MOSFETs) for power distribution to the heaters and the Scan Control Electronics/Signal Processing Electronics (SCE/SPE).

The Aux Operational Heaters are a redundant set of Receiver Operational Heaters and both heaters cannot be on at the same time. The on-board software protects against this condition. Refer to section 4.2.3 for more details on the limitations of when heaters may be switched on.

Reference	Command Name	Command Level	Switch Location	TLM Verification	TLM Verif. delay
CMD2:1	Rx Operational Heaters ON/OFF	0=Off 1=On	EE	TM2:1	5.333 sec
CMD2:2	SM Operational Heaters ON/OFF	0=Off 1=On	EE	TM2:2	5.333 sec
CMD2:3	Aux Operational Heaters ON/OFF	0=Off 1=On	EE	TM2:3	5.333 sec
CMD2:4	SPE/SCE ON/OFF	0=Off 1=On	EE	TM2:4	5.333 sec

Table 6.7.2-1 Steady State Command List

Astrium Ltd owns the copyright of this document which is supplied in confidence and which shall not be used for any purpose other than that for which it is supplied and shall not in whole or in part be reproduced, copied, or communicated to any person without written permission from the owner.

6.7.3 BIM Register Commands

The BIM register commands are listed in Table 6.7.3-1.

The Electronics Equipment (EE) is a multi-module stack with a common digital serial bus providing communications between the processor and interface modules. This bus is called the Inter-Module Bus (BIM). The processor can write to registers via the BIM to control interface module functions.

CMD3:1, CMD3:2 and CMD3:3 form a 3 bit code which controls the multiplexer which routes Receiver channels to the redundant Signal Processing Electronics channel (SPE6).

SPE Mux Code			Rx Channel Routing
CMD3:1	CMD3:2	CMD3:3	
0	0	0	H1 connected to SPE6
0	0	1	H2 connected to SPE6
0	1	0	H3 connected to SPE6
0	1	1	SPE6 not used (0V)
1	0	0	H4 connected to SPE6
1	0	1	H5 connected to SPE6
1	1	0	SPE6 not used (0V)
1	1	1	SPE6 not used (0V)

The remaining commands control the Scan Control Electronics (SCE) Functions.

The Zero Position Sensors are used to provide a reference point for the motor position measurement system. Although the redundant sensors are in different positions, the software automatically compensates for this such that the motor positioning is the same independent of which sensor is used.

The Motor Sensors are used to control the commutation function of the Scan Drive Amplifier (SDA) which routes the current into the correct windings. Functionality is identical for either redundancy.

The Motor Supply On/Off allows one or both motors to be disabled for diagnostic or testing purposes.

The Motor Current Trip commands control the current trip function of the Scan Drive Amplifier. If this function is enabled using the Motor Current Trip Enable/Disable command, then a hardware function monitors the current in the motor and if the current exceeds 1.65A (±10%) the amplifier is automatically disabled, resulting in no current in the motor. This condition is indicated in telemetry by BIM Register Telemetry 3:12 or 3:13 (see section 4.2.5.3). The amplifier can be re-enabled by setting the Motor Current Trip command to disabled. The current trip function can then be re-enabled by setting the Motor Current Trip command to enabled.Internal Telemetry

Astrium Ltd owns the copyright of this document which is supplied in confidence and which shall not be used for any purpose other than that for which it is supplied and shall not in whole or in part be reproduced, copied, or communicated to any person without written permission from the owner.

Reference	Command Name	Command Level	Switch Location	TLM Verification	TLM Verif. delay
CMD3:1	SPE Mux Code MSB	0=clear 1=set	EE	SD10:11	5.333 sec
CMD3:2	SPE Mux Code	0=clear 1=set	EE	SD10:11	5.333 sec
CMD3:3	SPE Mux Code LSB	0=clear 1=set	EE	SD10:11	5.333 sec
CMD3:4	Select RDM Zero Position Sensors A/B	0=A 1=B	EE	TM3:4	5.333 sec
CMD3:5	Select FDM Zero Position Sensors A/B	0=A 1=B	EE	TM3:5	5.333 sec
CMD3:6	Select RDM Motor Sensors A/B	0=A 1=B	EE	TM3:6	5.333 sec
CMD3:7	Select FDM Motor Sensors A/B	0=A 1=B	EE	TM3:7	5.333 sec
CMD3:8	RDM Motor Supply ON/OFF	0=Off 1=On	EE	TM3:8	5.333 sec
CMD3:9	FDM Motor Supply ON/OFF	0=Off 1=On	EE	TM3:9	5.333 sec
CMD3:10	RDM Motor Current Trip enable/disable	0=enabled 1=disabled	EE	TM3:10	5.333 sec
CMD3:11	FDM Motor Current Trip enable/disable	0=enabled 1=disabled	EE	TM3:11	5.333 sec

Table 6.7.3-1 BIM Register Command List

Astrium Ltd owns the copyright of this document which is supplied in confidence and which shall not be used for any purpose other than that for which it is supplied and shall not in whole or in part be reproduced, copied, or communicated to any person without written permission from the owner.

6.8 Internal Telemetry

Internal Telemetry is acquired by the EE, under control of the MINOS, once per Scan Period (2.667 seconds).

Internal telemetry is divided into 6 categories:-

Telemetry Category	Telemetry Reference	Description
Switch Status	TM1:1 to TM1:11	section 6.8.1
Bilevel Status	TM2:1 to TM2:4	section 6.8.2
BIM Register Status	TM3:1 to TM3:13	section 6.8.3
Standard Temperature (thermistors)	TM4:1 to TM4:24	section 6.8.4
Current	TM5:1 to TM5:6	section 6.8.5
High Precision Temperature (PRTs)	TM6:1 to TM6:8	section 6.8.6

Refer to Appendix A for figures showing the functionality of each telemetry channel.

6.8.1 Switch Status Telemetry

The switch status telemetry are listed in Table 6.8.1-1.

These provide the status of the switches controlled by HL Commands (refer to section 6.7.1 for description).

Reference	Telemetry Name	Telemetry Source
TM1:1	Receiver Channel H1 On/Off	Rx
TM1:2	Receiver Channel H1 Local Oscillator A/B selected	Rx
TM1:3	Receiver Channel H2 On/Off	Rx
TM1:4	Receiver Channel H2 Local Oscillator A/B selected	Rx
TM1:5	Receiver Channels H3/H4 Frontend On/Off	Rx
TM1:6	Receiver Channel H3/H4 Local Oscillator A/B selected	Rx
TM1:7	Receiver Channel H3 Backend On/Off	Rx
TM1:8	Receiver Channel H4 Backend On/Off	Rx
TM1:9	Receiver Channel H5 On/Off	Rx
TM1:10	Receiver Channel H5 Local Oscillator A/B selected	Rx
TM1:11	RX CV On/Off	EE

Table 6.8.1-1 Switch Status Telemetry List

Astrium Ltd owns the copyright of this document which is supplied in confidence and which shall not be used for any purpose other than that for which it is supplied and shall not in whole or in part be reproduced, copied, or communicated to any person without written permission from the owner.

6.8.2 Bilevel Status Telemetry

The bilevel status telemetry are listed in Table 6.8.2-1.

These provide the status of the switches controlled by the Steady-state Commands (refer to section 6.7.2 for description).

Reference	Telemetry Name	Telemetry Source
TM2:1	Receiver Operational Heaters On/Off	EE
TM2:2	Scan Mechanism Operational Heaters On/Off	EE
TM2:3	Auxiliary Operational Heaters On/Off	EE
TM2:4	Signal Processing Electronics/Scan Control Electronics On/Off	EE

Table 6.8.2-1 Bilevel Status Telemetry List

Astrium Ltd owns the copyright of this document which is supplied in confidence and which shall not be used for any purpose other than that for which it is supplied and shall not in whole or in part be reproduced, copied, or communicated to any person without written permission from the owner.

6.8.3 BIM Register Status Telemetry

The BIM register status telemetry are listed in Table 6.8.3-1.

These provide the status of the registers controlled by the BIM Register Commands (refer to section 6.7.3 for description). In addition, channels 3:12 and 3:13 provide the status of the motor current trip circuits.

Reference	Telemetry Name	Telemetry Source
TM3:1	SPE MUX CODE MSB	EE
TM3:2	SPE MUX CODE	EE
TM3:3	SPE MUX CODE LSB	EE
TM3:4	RDM Zero Position Sensors A/B selected	EE
TM3:5	FDM Zero Position Sensors A/B selected	EE
TM3:6	RDM Motor Sensors A/B selected	EE
TM3:7	FDM Motor Sensors A/B selected	EE
TM3:8	RDM Motor Supply On/Off	EE
TM3:9	FDM Motor Supply On/Off	EE
TM3:10	RDM Motor Current Trip Enable/Disable Status	EE
TM3:11	FDM Motor Current Trip Enable/Disable Status	EE
TM3:12	RDM Motor Current Trip Status	EE
TM3:13	FDM Motor Current Trip Status	EE

Table 6.8.3-1 BIM Register Status Telemetry List

Astrium Ltd owns the copyright of this document which is supplied in confidence and which shall not be used for any purpose other than that for which it is supplied and shall not in whole or in part be reproduced, copied, or communicated to any person without written permission from the owner.

6.8.4 Standard Precision Thermistor Telemetry

The thermistor telemetry are listed in Table 6.8.4-1.

These provide the temperature at various points in the instrument. Refer to Appendix A for diagrams showing functional and approximate physical location of each thermistor.

Refer to AD2 for procedure to convert digital codes into engineering units.

Reference	Telemetry Name	Telemetry Source	Acquisition Time
TM4:1	LO H1 Temperature (QBS1)	Rx	669
TM4:2	LO H2 Temperature (QBS2)	Rx	671
TM4:3	LO H3/4 Temperature (QBS3/4)	Rx	674
TM4:4	LO H5 Temperature (QBS5)	Rx	675
TM4:5	Mixer/LNA/Multiplexer H1 Temperature (DC1)	Rx	677
TM4:6	Mixer/LNA/Multiplexer H2 Temperature (DC2)	Rx	679
TM4:7	Mixer/LNA/Multiplexer H3/4 Temperature (DC3/4)	Rx	685
TM4:8	Mixer/LNA/Multiplexer H5 Temperature (DC5)	Rx	687
TM4:9	Quasi-optics Baseplate Temperature No.1	Rx	690
TM4:10	Quasi-optics Baseplate Temperature No.2	Rx	691
TM4:11	IF Baseplate Temperature No.1 (Top connector cavity)	Rx	693
TM4:12	IF Baseplate Temperature No.2 (Relay board)	Rx	695
TM4:13	Scan Mechanism Core Temperature	SM	698
TM4:14	Scan Mechanism Housing Temperature	SM	699
TM4:15	RDM SSHM Temperature	SM	701
TM4:16	FDM SSHM Temperature	SM	703
TM4:17	Structure 1 Temperature (-A edge, next to baseplate cutout)	Baseplate	706
TM4:18	Structure 2 Temperature (+A edge, inbetween Rx and SM)	Baseplate	707
TM4:19	Structure 3 Temperature (-V edge, inbetween EE and SM)	Baseplate	709
TM4:20	Processor Module Temperature	EE	711
TM4:21	Main DC/DC Converter Module Temperature	EE	714
TM4:22	SCE RDM Module temp	EE	722
TM4:23	SCE FDM Module temp	EE	724
TM4:24	RF DC/DC converter Module temp	EE	726

dt = (Acquisition Time/432) seconds

Table 6.8.4-1 Thermistor Telemetry List

Astrium Ltd owns the copyright of this document which is supplied in confidence and which shall not be used for any purpose other than that for which it is supplied and shall not in whole or in part be reproduced, copied, or communicated to any person without written permission from the owner.

6.8.5 Analogue Telemetry

The analogue telemetry are listed in Table 6.8.5-1.

These provide the current consumption of various power lines in the instrument. Refer to Appendix A for diagrams showing the current telemetry points.

Refer to AD2 for procedure to convert digital codes into engineering units.

Reference	Telemetry Name	Telemetry Source	Acquisition Time
TM5:1	RDM Motor Current	EE	728
TM5:2	FDM Motor Current	EE	730
TM5:3	EE+SM +5v current	EE	732
TM5:4	Receiver +8V current	EE	734
TM5:5	Receiver +15V current	EE	736
TM5:6	Receiver -15V current	EE	738

dt = (Acquisition Time/432) seconds

Table 6.8.5-1 Analogue Telemetry List

6.8.6 High Precision Temperature Telemetry (PRTs)

The PRT telemetry are listed in Table 6.8.6-1.

These provide the temperature of the OBCT. Refer to Appendix A for diagram showing approximate physical location of each PRT on the OBCT. In addition, channels 6:6 to 6:8 provide calibration channels to allow the temperature to be accurately calculated.

Refer to AD2 for procedure to convert digital codes into engineering units (with standard accuracy).

Reference	Telemetry Name	Telemetry Source	Acquisition Time
TM6:1	PRT 1	OBCT	133
TM6:2	PRT 2	OBCT	263
TM6:3	PRT 3	OBCT	394
TM6:4	PRT 4	OBCT	523
TM6:5	PRT 5	OBCT	653
TM6:6	PRT CAL 1 (118Ω)	EE	860
TM6:7	PRT CAL 2 (95.3Ω)	EE	983
TM6:8	PRT CAL 3 (80.6Ω)	EE	1113

dt = (Acquisition Time/432) seconds

Table 6.8.6-1 PRT Telemetry List

Astrium Ltd owns the copyright of this document which is supplied in confidence and which shall not be used for any purpose other than that for which it is supplied and shall not in whole or in part be reproduced, copied, or communicated to any person without written permission from the owner.

7. ROUTINE OPERATIONS

7.1 Introduction

This section provides the procedures required to perform routine operations of the MHS Instrument.

Each procedure has a 3 digit number as follows:-

P1xx : Nominal procedures
P2xx : Sub procedures: Mode changing
P3xx : Sub procedures: Miscellaneous
P4xx : Sub procedures: Routine Checkout and Calibration
P7xx:: Sub procedures : Diagnostics

Some procedures call other procedures as sub-procedures. Any procedure or sub-procedure may be performed stand-alone, provided the initial conditions are valid. All procedures, except P1xx and P2xx, leave the instrument in the same mode that it started in.

P110 is the routine switch off procedure provided the Instrument is in Scan Mode. To switch the Instrument off from any mode, use P200 followed by P201.

Special operations, including the Emergency Switch-off Procedure (P999) are provided in section 8.

If a status verification fails after issuing a command during any of these procedures and it can be confirmed that the command was correctly issued to the MHS (by spacecraft verification, eg at MIU/MPU level) then is it acceptable to re-issue the command up to 2 more times. If the status is incorrect after issuing the command 3 times then a fault investigation should be started. If it is deemed necessary to switch off the MHS then procedure P999 should be used.

Astrium Ltd owns the copyright of this document which is supplied in confidence and which shall not be used for any purpose other than that for which it is supplied and shall not in whole or in part be reproduced, copied, or communicated to any person without written permission from the owner.

The following procedures are provided:-

REF No.	Procedure Name	Use	Section
P100	OFF Mode to SCAN Mode	Complete sequence for nominal operation	7.2
P101	OFF Mode to SCAN Mode (Auto)	Alternative to P100 which uses the 'automatic mode transitions' feature of MHS.	7.3
P110	SCAN Mode to OFF Mode	Complete sequence for nominal operation	7.4
P200	Any Mode to SAFEING Mode	To prepare the Instrument for switch-off from any mode or configuration. The Instrument automatically exits Safeing Mode to Power-on Mode.	7.5
P201	POWER-ON Mode to OFF Mode	To switch off the instrument	7.6
P210	OFF mode to POWER-ON Mode	To switch the Instrument on	7.7
P211	POWER-ON to WARM-UP Mode	To warm up all equipments to the performance temperature range	7.8
P212	WARM-UP Mode to STANDBY Mode	To achieve readiness for scientific data collection modes	7.9
P213	STANDBY MODE to SCAN Mode	To collect scientific data with the Reflector rotating	7.10
P214	SCAN / FIXED VIEW Mode to STANDBY Mode	To stop collection of scientific data	7.11
P215	STANDBY MODE to FIXED VIEW Mode	To collect scientific data with the Reflector stationary	7.12
P216	STANDBY Mode to POWER-ON Mode	To power down all equipments except the EE.	7.13
P300	Load Table Parameter (EM)	To load software parameters into the relevant Software Parameter Tables. Specific to EM.	7.14
P301	Load Table Parameter (PFM)	To load software parameters into the relevant Software Parameter Tables. Specific to PFM.	7.15
P302	Load Table Parameter (FM2)	To load software parameters into the relevant Software Parameter Tables. Specific to FM2.	7.16
P303	Load Table Parameter (FM3)	To load software parameters into the relevant Software Parameter Tables. Specific to FM3.	7.17

Astrium Ltd owns the copyright of this document which is supplied in confidence and which shall not be used for any purpose other than that for which it is supplied and shall not in whole or in part be reproduced, copied, or communicated to any person without written permission from the owner.

REF No.	Procedure Name	Use	Section
P304	Load Table Parameter (FM4)	To load software parameters into the relevant Software Parameter Tables. Specific to FM4.	7.18
P305	***Timecode Patch***	***To load software patch to enable correct synchronisation of MHS Time code with the 8SP signal.***	***7.19***
P310	Change fixed view position (absolute)	To move the Reflector to a new position when in Fixed View Mode. The new position is specified as an absolute position (0..359.99°).	7.20
P311	Change fixed view position (relative)	To move the Reflector to a new position when in Fixed View Mode. The new position is specified as a change relative to the current position (approx. +/-14°).	7.21
P320	Load Table Data	To change software parameter values	7.22
P321	Read Table Data	To verify software parameter values	7.23
P330	Gain and DC Offset Initialisation/optimisation	To set the DC Offsets to valid values and optimise the Rx Gains.	7.24
P331	Rx Gain Setting	To set the Rx Gains	7.25
P410	Generate Status Report	Records telemetry for long term trend assessment	7.26

All these procedures have been tested during ground operations

Refer to section 8.0 for procedures for special operations.

Astrium Ltd owns the copyright of this document which is supplied in confidence and which shall not be used for any purpose other than that for which it is supplied and shall not in whole or in part be reproduced, copied, or communicated to any person without written permission from the owner.

7.2 Procedure P100 : OFF MODE to SCAN MODE

7.2.1 Purpose

This is the nominal procedure to bring the MHS Instrument from the OFF Mode (ie switched off) to the SCAN Mode (ie. the nominal scientific data acquisition mode). It includes all the necessary instrument initialisations. In addition, the following procedures can be optionally performed:-

- Rx Gain and DC Offset Optimisation (should only be required if the current settings are not known)
- Instrument Performance Checkout

Both these procedures are mandatory if this is the first time MHS is switched on in orbit (ie commissioning).

7.2.2 Constraints

None.

7.2.3 Initial Conditions

The Instrument shall be in Off Mode.

Astrium Ltd owns the copyright of this document which is supplied in confidence and which shall not be used for any purpose other than that for which it is supplied and shall not in whole or in part be reproduced, copied, or communicated to any person without written permission from the owner.

7.2.4 Procedure P100 : OFF MODE to SCAN MODE

Step No.	Minimum time between Step (n) and Step (n-1)	Type of action	Action	Notes
1	n/a	Procedure	P210	OFF to POWER-ON Mode
2	0 seconds	Procedure	Perform the relevant procedure:- If PFM then do P301 If FM2 then do P302 If FM3 then do P303 If FM4 then do P304	Load Table Parameters (model specific)
3	0 seconds	Procedure	P211	POWER-ON to WARM-UP Mode
4	0 seconds	Procedure	P212	WARM-UP to STANDBY Mode
5	0 seconds	Procedure	If Performance Checkout or Rx Gains and DC Offsets Optimisation required do P400	Optional Checkout (including Rx Gains and DC Offsets Optimisation)
6	0 seconds	Procedure	P213	STANDBY to SCAN Mode
END				

Astrium Ltd owns the copyright of this document which is supplied in confidence and which shall not be used for any purpose other than that for which it is supplied and shall not in whole or in part be reproduced, copied, or communicated to any person without written permission from the owner.

7.3 Procedure P101 : OFF MODE to SCAN MODE (with automatic mode transitions)

7.3.1 Purpose

This is an alternative procedure to bring the MHS Instrument from the OFF Mode (ie switched off) to the SCAN Mode (ie. the nominal scientific data acquisition mode).

This procedure uses the 'automatic mode transitions' feature of the Instrument. This causes the Instrument to automatically switch from Power-on Mode to Warm-up Mode when the Receiver reaches the switch-on temperature range, and automatically switch from Warm-up Mode to Standby Mode when the Receiver reaches the performance temperature range and the Scan Mechanism reaches the operational temperature range.

This procedure may save time compared to procedure P100 as the mode transition can occur as soon as the next temperature threshold is achieved, as opposed to waiting for a command from the spacecraft (which may require waiting for the next contact with the ground station).

7.3.2 Constraints

Before general use, this procedure must be validated in-flight (eg. during the commissioning phase) in order to verify and, if required, optimise the temperature thresholds.

Until fully validated, authority to proceed must be obtained from Astrium Ltd.

7.3.3 Initial Conditions

The Instrument shall be in Off Mode.

Astrium Ltd owns the copyright of this document which is supplied in confidence and which shall not be used for any purpose other than that for which it is supplied and shall not in whole or in part be reproduced, copied, or communicated to any person without written permission from the owner.

7.3.4 Procedure P101 : OFF MODE to SCAN MODE (with automatic mode transitions)

Step No.	Minimum time between Step (n) and Step (n-1)	Type of action	Action	Notes
1	n/a	Procedure	P210	OFF to POWER-ON Mode
2	0 seconds	Procedure	Perform the relevant procedure:- If PFM then do P301 If FM2 then do P302 If FM3 then do P303 If FM4 then do P304	Load Table Parameters (model specific)
3	0 seconds	Command	TC_LTD(TLT,85,$31,$38,$FF,$FF)	POWER-ON to WARM-UP timeout = 3.5 hours WARM-UP to STANDBY timeout = 18.2 hours
4	0.1 seconds	Command	TC_RHK	Request HK Packet
5	0.1 seconds	Verify MHS TLM	HK4:7=2	TC Ack: Received Command Count=2
6	2.667 seconds	Command	TC_LTD(ICT,0,$FF,$00,$00,$E0)	Enable automatic mode transitions
7	0.1 seconds	Command	TC_RHK	Request HK Packet
8	0.1 seconds	Verify MHS TLM	HK4:7=2	TC Ack: Received Command Count=2
9	As required	Command	TC_RHK	Request HK Packet
10	0.1 seconds	Verify MHS TLM	If HK3:1<>2 THEN Goto step 9	Wait until Mode = STANDBY
11	0 seconds	Procedure	If checkout required Perform P400	Optional Routine Checkout
12	0 seconds	Procedure	P213	STANDBY to SCAN Mode
END				

Astrium Ltd owns the copyright of this document which is supplied in confidence and which shall not be used for any purpose other than that for which it is supplied and shall not in whole or in part be reproduced, copied, or communicated to any person without written permission from the owner.

7.4 Procedure P110 : SCAN MODE to OFF MODE

7.4.1 Purpose

This is the nominal procedure to bring the MHS Instrument from the SCAN Mode to the OFF Mode. This would be performed to switch the Instrument off after a period of operation in which science data was being acquired.

7.4.2 Constraints

None.

7.4.3 Initial Conditions

The Instrument shall be in Scan Mode.

7.4.4 Procedure P110 : SCAN MODE to OFF MODE

Step No.	Minimum time between Step (n) and Step (n-1)	Type of action	Action	Notes
1	n/a	Procedure	P214	SCAN Mode to STANDBY Mode
2	0 seconds	Procedure	P216	STANDBY Mode to POWER-ON Mode
3	0 seconds	Procedure	P201	POWER-ON Mode to OFF Mode
END				

Astrium Ltd owns the copyright of this document which is supplied in confidence and which shall not be used for any purpose other than that for which it is supplied and shall not in whole or in part be reproduced, copied, or communicated to any person without written permission from the owner.

7.5 Procedure P200 : Any Mode to SAFEING Mode

7.5.1 Purpose

This procedure shall be used to stop the current MHS activity and command it back into a safe configuration. This may be done as a part of a routine switch-off procedure, or as part of an emergency switch off procedure (eg. when an anomaly has been detected by the spacecraft).

MHS will enter Safeing Mode, park the Reflector at the OBCT (if not already there), switch off the Scan Mechanism and Receiver, and then enter Power-On Mode.

7.5.2 Constraints

None.

7.5.3 Initial Conditions

The Instrument may be in any mode of operation and in any configuration.

7.5.4 Procedure P200 : Any Mode to SAFEING Mode

Step No.	Minimum time between Step (n) and Step (n-1)	Type of action	Action	Notes
1	n/a	Command	TC_STM(SAFEING)	Select Safeing Mode
2	8 seconds	Command	TC_RHK	Request HK Packet
3	0.1 seconds	Verify MHS TLM	HK3:1=0	Mode Code = Power-on
END				

Astrium Ltd owns the copyright of this document which is supplied in confidence and which shall not be used for any purpose other than that for which it is supplied and shall not in whole or in part be reproduced, copied, or communicated to any person without written permission from the owner.

7.6 Procedure P201 : POWER-ON Mode to OFF Mode

7.6.1 Purpose

This procedure shall be used to switch the MHS Instrument off.

7.6.2 Constraints

None.

7.6.3 Initial Conditions

MHS shall be in Power-on Mode.

7.6.4 Procedure P201 : POWER-ON Mode to OFF Mode

Step No.	Minimum time between Step (n) and Step (n-1)	Type of action	Action	Notes
2	n/a	Power Bus	Remove Main Bus Power Remove Pulse Load Bus Power If Survival Bus Power is off then Apply Survival Bus Power	Instrument switch-off
3	1 second	Verify S/C TLM	Main Bus Power < 0.1W Pulse Load Bus Power < 0.1W Survival Bus Power < 66W	0W typical 0W typical Depends on thermal environment
END				

Astrium Ltd owns the copyright of this document which is supplied in confidence and which shall not be used for any purpose other than that for which it is supplied and shall not in whole or in part be reproduced, copied, or communicated to any person without written permission from the owner.

7.7 Procedure P210 : OFF Mode to POWER-ON Mode

7.7.1 Purpose

This procedure shall be used to switch on the Instrument.

The instrument power is applied, after which the platform can acquire Instrument telemetry. The SPE/SCE circuits are switched on, ***the timecode patch loaded,*** and the time code initialised.

7.7.2 Constraints

None. This procedure may be used for MHS PIE A or PIE B.

7.7.3 Initial Conditions

The Instrument shall be in OFF Mode. The EE Survival Thermistor shall be indicating a temperature greater than or equal to -20°C (-25°C minimum switch-on + 5°C margin).

Astrium Ltd owns the copyright of this document which is supplied in confidence and which shall not be used for any purpose other than that for which it is supplied and shall not in whole or in part be reproduced, copied, or communicated to any person without written permission from the owner.

7.7.4 Procedure P210 : OFF Mode to POWER-ON Mode

Step No.	Minimum time between Step (n) and Step (n-1)	Type of Action	Action	Notes
1	n/a	Verify S/C TLM	EE Survival Temperature >= -20°C	minimum switch on temperature of EE
2	0 seconds min 2.5 hours max		IF temperature criterion not met THEN Pause 5 minutes Goto Step 1	
3	0 seconds	Power Bus	Apply Main Bus A (or B) and Pulse Load Bus A (or B) Primary Power	Apply Main Bus A for PIE A, Main Bus B for PIE B.
4	0 seconds	Power Bus	Remove Survival Bus Primary Power	Optional.
5	5 seconds	Verify S/C TLM	Main Bus Power < 12W Pulse Load Bus Power < 33W Survival Power <0.1W	10W typical 27W typical 0W typical
6	5 seconds	Command	TC_STM(POWER-ON)	Select Power-on Mode in case of a REF Clock Error
7	8 seconds	Command	TC_RHK	Request HK Packet
8	0.1 seconds	Verify MHS TLM	HK3:1=0 HK5=0 HK6(TM2:1)=1 HK6(TM2:2)=1 HK6(TM1:11)=0	Mode Code = Power on Fault Code = no faults or warnings Rx Operational Heaters On SM Operational Heaters On Rx DC/DC Converter Off
9	0 seconds	Command	TC_SWC(CMD2:4=1)	Turn SPE/SCEOn.
10	8 seconds	Command	TC_RHK	Request HK Packet
11	0.1 seconds	Verify MHS TLM	HK6(TM2:4)=1	SPE/SCE=On
12	0 seconds	Verify S/C TLM	Main Bus Power <39W	29W typical
13	***2.667 seconds***	***Procedure***	***P305***	***Timecode Patch***
14	2.667 seconds	Command	TC_STC(current date & time)	Set TimeCode to current date & time
15	10.667 seconds	Command	TC_RHK	Request HK Packet

Astrium Ltd owns the copyright of this document which is supplied in confidence and which shall not be used for any purpose other than that for which it is supplied and shall not in whole or in part be reproduced, copied, or communicated to any person without written permission from the owner.

Step No.	Minimum time between Step (n) and Step (n-1)	Type of Action	Action	Notes
16	0.1 seconds	Verify MHS TLM	HK2=current date & time	Time Code=current date& time
END				

Astrium Ltd owns the copyright of this document which is supplied in confidence and which shall not be used for any purpose other than that for which it is supplied and shall not in whole or in part be reproduced, copied, or communicated to any person without written permission from the owner.

7.8 Procedure P211 : POWER-ON Mode to WARM-UP Mode

7.8.1 Purpose

This procedure shall be used to switch the Instrument from Power-on Mode to Warm-up Mode. This is required as part of the sequence from OFF Mode to a science data acquisition mode.

The Receiver will be switched on and this will cause it to warm up to achieve the performance temperature range.

7.8.2 Constraints

None.

7.8.3 Initial Conditions

The Instrument shall be in Power-on mode. The Receiver temperature must be greater than -20°C (-25°C minimum switch on temperature +5°C margin).

Astrium Ltd owns the copyright of this document which is supplied in confidence and which shall not be used for any purpose other than that for which it is supplied and shall not in whole or in part be reproduced, copied, or communicated to any person without written permission from the owner.

7.8.4 Procedure P211: POWER-ON Mode to WARM-UP Mode

Step No.	Minimum time between Step (n) and Step (n-1)	Type of action	Action	Notes
1	n/a	Command	TC_RHK	Request HK Packet
2	0.1seconds	Verify MHS TLM	HK3:1=0 HK6(TM2:4)=1 HK5=0	Mode = Power- on SPE/SCE=On Fault code = no faults or warnings

3	0.1 seconds	Verify MHS TLM	IF HK3:3=1 THEN
			verifyHK7(TM4:1 to TM4:4)<=$EC
			IF HK3:3=2 THEN
			verify HK7(TM4:5 to TM4:8)<=$EC
			IF HK3:3=3THEN
			verify HK7(TM4:9 to TM4:12)<=$EC
				Check Rx temperatures are >=-20°C
				
				Thermistor telemetry depends on the sub-commutation code.

4	2.667 seconds	Command	TC_RHK	Request HK packet

5	0.1 seconds	Verify MHS TLM	IF HK3:3=1 THEN
			verify HK7(TM4:1 toTM4:4)<=$EC
			IF HK3:3=2 THEN
			verify HK7(TM4:5 to TM4:8)<=$EC
			IF HK3:3=3 THEN
			verifyHK7(TM4:9 to TM4:12)<=$EC
				Check Rx temperatures are >=-20°C
				
				Thermistor telemetry depends on the sub-commutation code.

6	0 seconds		Repeat steps 4 and 5 until HK3:3=1and HK3:3=2 and HK3:3=3	Repeat until all HK Packets with Rx thermistor data have been checked.
7	0 sec min, 3 hours max		IF temperature criteria not met THEN Pause 5 minutes Goto step 4	Time depends on thermal environment.
8	2.667 seconds	Command	TC_STM(WARM_UP)	Select Warm-up Mode
9	8 seconds	Command	TC_RHK	Request HK Packet

Astrium Ltd owns the copyright of this document which is supplied in confidence and which shall not be used for any purpose other than that for which it is supplied and shall not in whole or in part be reproduced, copied, or communicated to any person without written permission from the owner.

Step No.	Minimum time between Step (n) and Step (n-1)	Type of action	Action	Notes
10	0.1 seconds	Verify MHS TLM	HK3:1=1 HK5=0 HK6(TM2:4)=1 HK6(TM1:1)=1 HK6(TM1:3)=1 HK6(TM1:5)=1 HK6(TM1:7)=1 HK6(TM1:8)=1 HK6(TM1:9)=1 HK6(TM1:11)=1 HK6(TM2:1)=0 HK6(TM2:2)=1	Mode = Warm-up Fault code = no faults or warnings SPE/SCE = On H1 On H2 On H3/4 FE On H3 BE On H4 BE On H5 On Rx CV On Rx Operational Heaters Off SM Operational Heaters On
11	0 seconds	Verify S/C TLM	Main Bus Power < 76W Pulsed Load Bus < 8W	58W typical 6.5Wtypical
END				

Astrium Ltd owns the copyright of this document which is supplied in confidence and which shall not be used for any purpose other than that for which it is supplied and shall not in whole or in part be reproduced, copied, or communicated to any person without written permission from the owner.

7.9 Procedure P212 : WARM-UP Mode to STANDBY Mode

7.9.1 Purpose

This procedure shall be used to switch MHS from Warm-up Mode to Standby Mode. This is required as part of the sequence from OFF Mode to a science data acquisition mode.

MHS will energise the motor control circuits and cause the Reflector and Flywheel to rotate at a constant velocity for several seconds in order to initialise the position sensors. Then the Reflector is held under active control at the OBCT. When Standby Mode is established, the Instrument is ready to be commanded into a science data acquisition mode.

7.9.2 Constraints

None.

7.9.3 Initial Conditions

The Instrument shall be in Warm-up Mode. All equipments of the Instrument shall be within their performance temperature range.

Astrium Ltd owns the copyright of this document which is supplied in confidence and which shall not be used for any purpose other than that for which it is supplied and shall not in whole or in part be reproduced, copied, or communicated to any person without written permission from the owner.

7.9.4 Procedure P212 : WARM-UP Mode to STANDBY Mode

Step No.	Minimum time between Step (n) and Step (n-1)	Type of action	Action	Notes
1	n/a	Command	TC_RHK	Request HK Packet
2	0.1 seconds	Verify MHS TLM	HK3:1=1 HK5=0 HK6(TM2:4)=1	Mode = Warm-up Fault code = no faults or warnings SPE/SCE = On

3	0.1 seconds	Verify MHS TLM	IF HK3:3=1 THEN
			verify HK7(TM4:1 to TM4:4)<=$A1
			IF HK3:3=2 THEN
			verify HK7(TM4:5 to TM4:8)<=$A1
			IF HK3:3=3 THEN
			verify HK7(TM4:9 to TM4:12)<=$A1
			IF HK3:3=4 THEN
			verify HK7(TM4:13 toTM4:16)<=$D3
			IF HK3:3=5 THEN
			verify HK7(TM4:17 to TM4:19)<=$F6
			verify HK7(TM4:24)<=$D3
			IF HK3:3=6 THEN
			verify HK7(TM4:20 to TM4:23)<=$D3
				
				Check Rx temperatures are >=+15°C
				
				SM >= -5°C
				
				Baseplate >= -25°C
				Electronics Eqt >=-5°C
				
				Electronics Eqt>= -5°C

4	2.667 seconds	Command	TC_RHK	Request HK packet

Astrium Ltd owns the copyright of this document which is supplied in confidence and which shall not be used for any purpose other than that for which it is supplied and shall not in whole or in part be reproduced, copied, or communicated to any person without written permission from the owner.

Step No.	Minimum time between Step (n) and Step (n-1)	Type of action	Action	Notes

5	0.1 seconds	Verify MHS TLM	IF HK3:3=1 THEN
			verify HK7(TM4:1 to TM4:4)<=$A1
			IF HK3:3=2 THEN
			verify HK7(TM4:5 to TM4:8)<=$A1
			IF HK3:3=3 THEN
			verify HK7(TM4:9 to TM4:12)<=$A1
			IF HK3:3=4 THEN
			verify HK7(TM4:13 toTM4:16)<=$D3
			IF HK3:3=5 THEN
			verify HK7(TM4:17 to TM4:19)<=$F6
			verify HK7(TM4:24)<=$D3
			IF HK3:3=6 THEN
			verify HK7(TM4:20 to TM4:23)<=$D3
				Check Rx temperatures are >=+15°C
				
				SM >= -5°C
				
				Baseplate >= -25°C
				Electronics Eqt >=-5°C
				
				Electronics Eqt>= -5°C

6	0 seconds		Repeat steps 4 and 5 until HK3:3=1, 2, 3, 4, 5 and 6	Repeat until all thermistor data has been checked.
7	0 sec min 20 hours max		IF temperature criteria not met THEN Pause 5 minutes Goto step 4	Time depends on thermal environment
8	2.667 seconds	Command	TC_STM(STANDBY)	Select Standby Mode
9	16 seconds	Command	TC_RHK	Request HK Packet
10	0.1 seconds	Verify MHS TLM	HK3:1=2 HK5=0 HK6(TM2:4)=1 HK6(TM1:11)=1 HK6(TM2:1)=0 HK6(TM2 :2)=1 HK6(TM3:8)=1 HK6(TM3:9)=1	Mode = Standby Fault code = no faults or warnings SPE/SCE = On Rx CV On Rx Operational Heaters Off SM Operational Heaters On RDM Motor Supply On FDM Motor Supply On

Astrium Ltd owns the copyright of this document which is supplied in confidence and which shall not be used for any purpose other than that for which it is supplied and shall not in whole or in part be reproduced, copied, or communicated to any person without written permission from the owner.

Step No.	Minimum time between Step (n) and Step (n-1)	Type of action	Action	Notes
11	0 seconds	Verify S/C TLM	Main Bus Power < 76W Pulsed Load Bus < 12W	58W typical 9W typical
END				

Astrium Ltd owns the copyright of this document which is supplied in confidence and which shall not be used for any purpose other than that for which it is supplied and shall not in whole or in part be reproduced, copied, or communicated to any person without written permission from the owner.

7.10 Procedure P213 : STANDBY MODE to SCAN Mode

7.10.1 Purpose

This procedure shall be used to switch MHS from Standby Mode to Scan Mode. Scan Mode is the nominal science data acquisition mode.

The Reflector and Flywheel will start to perform the nominal scan profile. The radiometric data will be acquired and placed in Science Data Packets.

7.10.2 Constraints

None.

7.10.3 Initial Conditions

The Instrument shall be in Standby Mode.

Astrium Ltd owns the copyright of this document which is supplied in confidence and which shall not be used for any purpose other than that for which it is supplied and shall not in whole or in part be reproduced, copied, or communicated to any person without written permission from the owner.

7.10.4 Procedure P213 : STANDBY MODE to SCAN Mode

Step No.	Minimum time between Step (n) and Step (n-1)	Type of action	Action	Notes
1	n/a	Command	TC_RHK	Request HK Packet
2	0.1 seconds	Verify MHS TLM	HK3:1=2 HK5=0	Mode = Standby Mode Fault code = no faults or warnings
3	2.667 seconds	Command	TC_STM(SCAN)	Select Scan Mode
4	8 seconds	Command	TC_RHK	Request HK Packet
5	0.1 seconds	Verify MHS TLM	HK3:1=3 HK5=0 HK6(TM2:4)=1 HK6(TM1:11)=1 HK6(TM2:1)=0 HK6(TM2:2)=0	Mode =Scan Fault code = no faults or warnings SPE/SCE = On Rx CV On Rx Operational Heaters Off SM Operational Heaters Off
6	0 seconds	Verify S/C TLM	Main Bus Power < 76W Pulsed Load Bus < 4W average	58W typical 2.5W typical (average over 2.667 seconds)
7	0 seconds	Command	SD_RSD	Request SD Packet
8	0.1 seconds	Verify MHS SD	SD3:1=3 SD9:1=1 SD9:2=1 SD9:3=0	Mode = Scan DC Offsets Flag = Valid Scan Control Flag = Valid Profile = 0
9	2.667 seconds	Command	SD_RSD	Request SD Packet
10	0 seconds		Goto Step 9	Repeat SD Packet acquisition during Scan Mode to retrieve all scientific data.
END				

Astrium Ltd owns the copyright of this document which is supplied in confidence and which shall not be used for any purpose other than that for which it is supplied and shall not in whole or in part be reproduced, copied, or communicated to any person without written permission from the owner.

7.11 Procedure P214 : SCAN / FIXED VIEW Mode to STANDBY Mode

7.11.1 Purpose

This procedure shall be used to switch MHS from Scan Mode or Fixed View Mode to Standby Mode.

The Reflector and Flywheel will be parked at the OBCT. The radiometric data acquisition will be stopped.

7.11.2 Constraints

None.

7.11.3 Initial Conditions

The Instrument shall be in Scan Mode or Fixed View Mode.

Astrium Ltd owns the copyright of this document which is supplied in confidence and which shall not be used for any purpose other than that for which it is supplied and shall not in whole or in part be reproduced, copied, or communicated to any person without written permission from the owner.

7.11.4 Procedure P214 : SCAN / FIXED VIEW Mode to STANDBY Mode

Step No.	Minimum time between Step (n) and Step (n-1)	Type of action	Action	Notes
1	n/a	Command	TC_STM(STANDBY)	Select Standby Mode
2	8 seconds	Command	TC_RHK	Request HK Packet
3	0.1 seconds	Verify MHS TLM	HK3:1=2 HK5=0 HK6(TM2:4)=1 HK6(TM1:11)=1 HK6(TM2:1)=0 HK6(TM2:2)=1	Mode =Standby Fault code = no faults or warnings SPE/SCE = On Rx CV On Rx Operational Heaters Off SM Operational Heaters On
4	0 seconds	Verify S/C TLM	Main Bus Power < 76W Pulsed Load Bus < 12W	58W typical 9W typical
END				

Astrium Ltd owns the copyright of this document which is supplied in confidence and which shall not be used for any purpose other than that for which it is supplied and shall not in whole or in part be reproduced, copied, or communicated to any person without written permission from the owner.

7.12 Procedure P215 : STANDBY MODE to FIXED VIEW Mode

7.12.1 Purpose

This procedure shall be used to switch MHS from Standby Mode to Fixed View Mode. Fixed View Mode is the alternative science data acquisition mode.

The Reflector and Flywheel will move to the commanded position and be held there under active control. The radiometric data will be acquired and placed in Science Data Packets.

7.12.2 Constraints

Pixel 1 Anomaly. The first pixel reading of the first packet on entry to Fixed View Mode from Standby Mode is invalid.

7.12.3 Initial Conditions

The Instrument shall be in Standby Mode.

Astrium Ltd owns the copyright of this document which is supplied in confidence and which shall not be used for any purpose other than that for which it is supplied and shall not in whole or in part be reproduced, copied, or communicated to any person without written permission from the owner.

7.12.4 Procedure P215 : STANDBY MODE to FIXED VIEW Mode

Step No.	Minimum time between Step (n) and Step (n-1)	Type of action	Action	Notes
1	n/a	Command	TC_RHK	Request HK Packet
2	0.1 seconds	Verify MHS TLM	HK3:1=2 HK5=0	Mode = Standby Mode Fault code = no faults or warnings
3	2.667 seconds	Command	TC_FVP(required position)	Set Fixed View Position
4	2.667 seconds	Command	TC_STM(FIXED VIEW)	Select Fixed View Mode
5	8 seconds	Command	TC_RHK	Request HK Packet
6	0.1 seconds	Verify MHS TLM	HK3:1=4 HK5=0 HK6(TM2:4)=1 HK6(TM1:11)=1 HK6(TM2:1)=0 HK6(TM2:2)=1	Mode =Fixed View Fault code = no faults or warnings SPE/SCE = On Rx CV On Rx Operational Heaters Off SM Operational Heaters On
7	0 seconds	Verify S/C TLM	Main Bus Power < 76W Pulsed Load Bus < 12W	58W typical 9W typical
8	0 seconds	Command	SD_RSD	Request SD Packet
9	0.1 seconds	Verify MHS SD	SD3:1=4 SD9:1=1 SD9:2=1 SD11:1:6=required position ± 0.6°	Mode = Fixed View DC Offsets Flag = Valid Scan Control Flag = Valid Reflector parked within 0.6° of required position
10	2.667 seconds	Command	SD_RSD	Request SD Packet
11	0 seconds		Goto Step 9	Repeat SD Packet acquisition during Fixed View Mode to retrieve all scientific data.
END				

Astrium Ltd owns the copyright of this document which is supplied in confidence and which shall not be used for any purpose other than that for which it is supplied and shall not in whole or in part be reproduced, copied, or communicated to any person without written permission from the owner.

7.13 Procedure P216 : STANDBY Mode to POWER-ON Mode

7.13.1 Purpose

This procedure shall be used to switch MHS from Standby Mode to Power-on Mode. This may be done as part of the switch off sequence, or in order to reconfigure the Instrument in Power-on Mode.

The motors drive amplifiers will be turned off and so active control of the Reflector and Flywheel will stop. The Receiver ***channels will switch off but the RFCV will remain on.***

7.13.2 Constraints

None.

7.13.3 Initial Conditions

The Instrument shall be in Standby Mode.

Astrium Ltd owns the copyright of this document which is supplied in confidence and which shall not be used for any purpose other than that for which it is supplied and shall not in whole or in part be reproduced, copied, or communicated to any person without written permission from the owner.

7.13.4 Procedure P216 : STANDBY Mode to POWER-ON Mode

Step No.	Minimum time between Step (n) and Step (n-1)	Type of action	Action	Notes
1	n/a	Command	TC_STM(POWER-ON)	Select Power-On Mode
2	8 seconds	Command	TC_RHK	Request HK Packet
3	0.1 seconds	Verify MHS TLM	HK3:1=1 HK5=0 HK6(TM2:4)=1 ***HK6(TM1:11)=1*** HK6(TM2:1)=1 HK6(TM2:2)=1	Mode =Power-On Fault code = no faults or warnings SPE/SCE = On ***Rx CV On*** Rx Operational Heaters On SM Operational Heaters On
4	0 seconds	Verify S/C TLM	***Main Bus Power < 43W*** Pulse Load Bus Power < 33W	***32W typical*** 27W typical
END				

Astrium Ltd owns the copyright of this document which is supplied in confidence and which shall not be used for any purpose other than that for which it is supplied and shall not in whole or in part be reproduced, copied, or communicated to any person without written permission from the owner.

7.14 Procedure P300 : Load Table Parameters (EM)

7.14.1 Purpose

This procedure shall be used to initialise the Software Table Parameters.

7.14.2 Constraints

Applicable to EM only.

7.14.3 Initial Conditions

The Instrument shall be in Power-on Mode.

Astrium Ltd owns the copyright of this document which is supplied in confidence and which shall not be used for any purpose other than that for which it is supplied and shall not in whole or in part be reproduced, copied, or communicated to any person without written permission from the owner.

7.14.4 Procedure P300 : Load Table Parameters (EM)

Step No.	Minimum time between Step (n) and Step (n-1)	Type of Action	Action	Notes
1	0 seconds	Command	TC_RHK	Request HK Packet
2	0.1 seconds	Verify MHS TLM	HK3:1=0	Mode Code = Power on
3	2.667 seconds	Command	TC_LTD(ICT,1,$AA,$9A,$AA,$49)	LO1,2,5 Side A; LO 3/4 Side B; H1..H3 Gain=0dB
4	0.1 seconds	Command	TC_RHK	Request HK Packet
5	0.1 seconds	Verify MHS TLM	HK4:7=2	TC Ack: Received Command Count=2
6	2.667 seconds	Command	TC_LTD(SCT,11,$40,$E8,$F6,$07)	PIE A Inductosyn Offset=64.91°
7	0.1 seconds	Command	TC_RHK	Request HK Packet
8	0.1 seconds	Verify MHS TLM	HK4:7=2	TC Ack: Received Command Count=2
9	2.667 seconds	Command	TC_LTD(SCT,84,$7A,$74,$7B,$08)	PIE B Inductosyn Offset=244.91°
10	0.1 seconds	Command	TC_RHK	Request HK Packet
11	0.1 seconds	Verify MHS TLM	HK4:7=2	TC Ack: Received CommandCount=2
12	2.667 seconds	Command	TC_LTD(SCT,1,$0F,$3C,$3C,$00)	Earth Scan Error Tolerance =0.15°
13	0.1 seconds	Command	TC_RHK	Request HK Packet
14	0.1 seconds	Verify MHS TLM	HK4:7=2	TC Ack: Received Command Count=2
15	2.667 seconds	Command	TC_LTD(SCT,12,$7A,$E1,$48,$FA)	Cogging Term 1: Amplitude=0.015
16	0.1 seconds	Command	TC_RHK	Request HK Packet
17	0.1 seconds	Verify MHS TLM	HK4:7=2	TC Ack: Received Command Count=2
18	2.667 seconds	Command	TC_LTD(SCT,13,$4E,$00,$00,$06)	Cogging Term 1: Frequency = 39
19	0.1 seconds	Command	TC_RHK	Request HK Packet
20	0.1 seconds	Verify MHS TLM	HK4:7=2	TC Ack: Received Command Count=2
21	2.667 seconds	Command	TC_LTD(SCT,14,$5A,$00,$00,$08)	Cogging Term 1: Phase = 180
22	0.1 seconds	Command	TC_RHK	Request HK Packet
23	0.1 seconds	Verify MHS TLM	HK4:7=2	TC Ack: Received Command Count=2
24	2.667 seconds	Command	TC_LTD(SCT,90,$41,$89,$38,$F8)	Cogging Term 2: Amplitude=0.002
25	0.1 seconds	Command	TC_RHK	Request HK Packet
26	0.1 seconds	Verify MHS TLM	HK4:7=2	TC Ack: Received Command Count=2

Astrium Ltd owns the copyright of this document which is supplied in confidence and which shall not be used for any purpose other than that for which it is supplied and shall not in whole or in part be reproduced, copied, or communicated to any person without written permission from the owner.

Step No.	Minimum time between Step (n) and Step (n-1)	Type of Action	Action	Notes
27	2.667 seconds	Command	TC_LTD(SCT,91,$68,$00,$00,$04)	Cogging Term 2: Frequency=13
28	0.1 seconds	Command	TC_RHK	Request HK Packet
29	0.1 seconds	Verify MHS TLM	HK4:7=2	TC Ack: Received Command Count=2
30	2.667 seconds	Command	TC_LTD(SCT,92,$00,$00,$00,$00)	Cogging Term 2: Phase=0
31	0.1 seconds	Command	TC_RHK	Request HK Packet
32	0.1 seconds	Verify MHS TLM	HK4:7=2	TC Ack: Received Command Count=2
33	2.667seconds	Command	TC_LTD(TLT,87,$2D,$29,$00,$00)	RDM Standby Mode current limits
34	0.1 seconds	Command	TC_RHK	Request HK Packet
35	0.1 seconds	Verify MHS TLM	HK4:7=2	TC Ack: Received Command Count=2
36	2.667seconds	Command	TC_LTD(TLT,88,$5D,$3C,$00,$00)	RDM Scan Mode current limits
37	0.1 seconds	Command	TC_RHK	Request HK Packet
38	0.1 seconds	Verify MHS TLM	HK4:7=2	TC Ack: Received Command Count=2
39	2.667 seconds	Command	TC_LTD(TLT,90,$2D,$29,$00,$00)	FDM Standby Mode current limits
40	0.1 seconds	Command	TC_RHK	Request HK Packet
41	0.1 seconds	Verify MHS TLM	HK4:7=2	TC Ack: Received Command Count=2
42	2.667 seconds	Command	TC_LTD(TLT,91,$5D,$3C,$00,$00)	FDM Scan Mode current limits
43	0.1 seconds	Command	TC_RHK	Request HK Packet
44	0.1 seconds	Verify MHS TLM	HK4:7=2	TC Ack: Received Command Count=2
45	2.667 seconds	Command	TC_LTD(TLT,92,$47,$41,$1E,$17)	5V Power-on mode current limits
46	0.1 seconds	Command	TC_RHK	Request HK Packet
47	0.1 seconds	Verify MHS TLM	HK4:7=2	TC Ack: Received Command Count=2
48	2.667 seconds	Command	TC_LTD(DOT,0,$5D,$7B,$52,$37)	H1 to H4 DC Offsets
49	0.1 seconds	Command	TC_RHK	Request HK Packet
50	0.1 seconds	Verify MHS TLM	HK4:7=2	TC Ack: Received Command Count=2
51	2.667 seconds	Command	TC_LTD(DOT,1,$13,$85,$73,$2C)	H5 DC Offset, SPE gain=6.65
52	0.1 seconds	Command	TC_RHK	Request HK Packet
53	0.1 seconds	Verify MHS TLM	HK4:7=2	TC Ack: Received Command Count=2

Astrium Ltd owns the copyright of this document which is supplied in confidence and which shall not be used for any purpose other than that for which it is supplied and shall not in whole or in part be reproduced, copied, or communicated to any person without written permission from the owner.

Step No.	Minimum time between Step (n) and Step (n-1)	Type of Action	Action	Notes
54	2.667 seconds	Command	TC_LTD(DOT,3,$E6,$58,$7F,$F8)	SPE min dynamic range=50%
55	0.1 seconds	Command	TC_RHK	Request HK Packet
56	0.1 seconds	Verify MHS TLM	HK4:7=2	TC Ack: Received Command Count=2
END				

Astrium Ltd owns the copyright of this document which is supplied in confidence and which shall not be used for any purpose other than that for which it is supplied and shall not in whole or in part be reproduced, copied, or communicated to any person without written permission from the owner.

7.15 Procedure P301 : Load Table Parameters (PFM)

7.15.1 Purpose

This procedure shall be used to initialise the Software Table Parameters.

7.15.2 Constraints

Applicable to PFM only.

7.15.3 Initial Conditions

The Instrument shall be in Power-on Mode.

Astrium Ltd owns the copyright of this document which is supplied in confidence and which shall not be used for any purpcse other than that for which it is supplied and shall not in whole or in part be reproduced, copied, or communicated to any person without written permission from the owner.

7.15.4 Procedure P301 : Load Table Parameters (PFM)

Step No.	Minimum time between Step (n) and Step (n-1)	Type of Action	Action	Notes
1	0 seconds	Command	TC_RHK	Request HK Packet
2	0.1 seconds	Verify MHS TLM	HK3:1=0	Mode Code = Power on
3	2.667 seconds	Command	TC_LTD(SCT,11,$7D,$6B,$85,$06)	PIE A Inductosyn Offset=62.71°
4	0.1 seconds	Command	TC_RHK	Request HK Packet
5	0.1 seconds	Verify MHS TLM	HK4:7=2	TC Ack: Received Command Count=2
6	2.667 seconds	Command	TC_LTD(SCT,84,79$,5A$,E1$,$08)	PIE B Inductosyn Offset=242.71°
7	0.1 seconds	Command	TC_RHK	RequestHK Packet
8	0.1 seconds	Verify MHS TLM	HK4:7=2	TC Ack: Received CommandCount=2
9	2.667 seconds	Command	TC_LTD(SCT,0,$F4,$F6,$00,$00)	SDA Max Demand Code = F4 (RDM) & F6 (FDM)
10	0.1seconds	Command	TC_RHK	Request HK Packet
11	0.1 seconds	Verify MHS TLM	HK4:7=2	TC Ack: Received Command Count=2
12	2.667 seconds	Command	TC_LTD(SCT,7,$62,$00,$00,$08)	RDM SDA gain=196.0
13	0.1 seconds	Command	TC_RHK	Request HK Packet
14	0.1 seconds	Verify MHS TLM	HK4:7=2	TC Ack: Received Command Count=2
15	2.667 seconds	Command	TC_LTD(SCT,30,$62,$00,$00,$08)	FDM SDA gain = 196.0
16	0.1 seconds	Command	TC_RHK	Request HK Packet
17	0.1 seconds	Verify MHS TLM	HK4:7=2	TC Ack: Received Command Count=2
18	2.667seconds	Command	TC_LTD(TLT,88,$5D,$3C,$00,$00)	RDM Scan Mode current limits
19	0.1 seconds	Command	TC_RHK	Request HK Packet
20	0.1 seconds	Verify MHS TLM	HK4:7=2	TC Ack: Received Command Count=2
21	2.667 seconds	Command	TC_LTD(TLT,91,$5D,$3C,$00,$00)	FDM Scan Mode current limits
22	0.1 seconds	Command	TC_RHK	Request HK Packet
23	0.1 seconds	Verify MHS TLM	HK4:7=2	TC Ack: Received Command Count=2
24	2.667 seconds	Command	TC_LTD(TLT,92,$47,$41,$1E,$17)	5V Power-on mode current limits
25	0.1 seconds	Command	TC_RHK	Request HK Packet
26	0.1 seconds	Verify MHS TLM	HK4:7=2	TC Ack: Received Command Count=2

Astrium Ltd owns the copyright of this document which is supplied in confidence and which shall not be used for any purpose other than that for which it is supplied and shall not in whole or in part be reproduced, copied, or communicated to any person without written permission from the owner.

Step No.	Minimum time between Step (n) and Step (n-1)	Type of Action	Action	Notes
27	2.667 seconds	Command	TC_LTD(DOT,0,$3F,$5E,$46,$27)	H1 to H4 DC Offsets
28	0.1 seconds	Command	TC_RHK	Request HK Packet
29	0.1 seconds	Verify MHS TLM	HK4:7=2	TC Ack: Received Command Count=2
30	2.667 seconds	Command	TC_LTD(DOT,1,$57,$82,$73,$2C)	H5 DC Offset, SPE gain=6.50
31	0.1 seconds	Command	TC_RHK	Request HK Packet
32	0.1 seconds	Verify MHS TLM	HK4:7=2	TC Ack: Received Command Count=2
33	2.667 seconds	Command	TC_LTD(SCT,1,$0F,$3C,$3C,$00)	Earth Scan Error Tolerance =0.15°
34	0.1 seconds	Command	TC_RHK	Request HK Packet
35	0.1 seconds	Verify MHS TLM	HK4:7=2	TC Ack: Received Command Count=2
36	2.667 seconds	Command	TC_LTD(ICT,2,$60,$00,$00,$00)	H4 Gain = 2dB
37	0.1 seconds	Command	TC_RHK	Request HK Packet
38	0.1 seconds	Verify MHS TLM	HK4:7=2	TC Ack: Received Command Count=2
39	2.667 seconds	Command	TC_LTD(DOT,3,$E6,$58,$7F,$F8)	SPE Min dynamic range = 50%
40	0.1 seconds	Command	TC_RHK	Request HK Packet
41	0.1 seconds	Verify MHS TLM	HK4:7=2	TC Ack: Received Command Count=2
END				

Astrium Ltd owns the copyright of this document which is supplied in confidence and which shall not be used for any purpose other than that for which it is supplied and shall not in whole or in part be reproduced, copied, or communicated to any person without written permission from the owner.

7.16 Procedure P302 : Load Table Parameters (FM2)

7.16.1 Purpose

This procedure shall be used to initialise the Software Table Parameters.

7.16.2 Constraints

Applicable to FM2 only.

7.16.3 Initial Conditions

The Instrument shall be in Power-on Mode.

Astrium Ltd owns the copyright of this document which is supplied in confidence and which shall not be used for any purpose other than that for which it is supplied and shall not in whole or in part be reproduced, copied, or communicated to any person without written permission from the owner.

7.16.4 Procedure P302 : Load Table Parameters (FM2)

Step No.	Minimum time between Step (n) and Step (n-1)	Type of Action	Action	Notes
1	0 seconds	Command	TC_RHK	Request HK Packet
2	0.1 seconds	Verify MHS TLM	HK3:1=0	Mode Code = Power on
3	2.667 seconds	Command	TC_LTD(ICT,1,$99,$9A,$AA,$49)	H1, H2 & H3/4 LO Side B selected
4	0.1 seconds	Command	TC_RHK	Request HK Packet
5	0.1 seconds	Verify MHS TLM	HK4:7=2	TC Ack: Received Command Count=2
6	2.667 seconds	Command	TC_LTD(DOT,0,$3F,$55,$56,$4C)	H1 to H4 DC Offsets
7	0.1 seconds	Command	TC_RHK	Request HK Packet
8	0.1 seconds	Verify MHS TLM	HK4:7=2	TC Ack: Received Command Count=2
9	2.667 seconds	Command	TC_LTD(DOT,1,$38,$82,$73,$2C)	H5 DC Offset, SPE gain=6.5
10	0.1 seconds	Command	TC_RHK	Request HK Packet
11	0.1 seconds	Verify MHS TLM	HK4:7=2	TC Ack: Received Command Count=2
12	2.667 seconds	Command	TC_LTD(DOT,3,$E6,$58,$7F,$F8)	SPE Min dynamic range= 50%
13	0.1 seconds	Command	TC_RHK	Request HK Packet
14	0.1 seconds	Verify MHS TLM	HK4:7=2	TC Ack: Received Command Count=2
15	2.667 seconds	Command	TC_LTD(SCT,11,$4D,$37,$6D,$08)	PIE A Inductosyn Offset=154.433°
16	0.1 seconds	Command	TC_RHK	Request HK Packet
17	0.1 seconds	Verify MHS TLM	HK4:7=2	TC Ack: Received Command Count=2
18	2.667 seconds	Command	TC_LTD(SCT,84,$53,$9B,$B6,$09)	PIE B Inductosyn Offset=334.433°
19	0.1 seconds	Command	TC_RHK	RequestHK Packet
20	0.1 seconds	Verify MHS TLM	HK4:7=2	TC Ack: Received CommandCount=2
21	2.667 seconds	Command	TC_LTD(SCT,1,$0F,$3C,$3C,$00)	Earth Scan Error Tolerance =0.15°
22	0.1 seconds	Command	TC_RHK	Request HK Packet
23	0.1 seconds	Verify MHS TLM	HK4:7=2	TC Ack: Received Command Count=2
24	2.667 seconds	Command	TC_LTD(SCT,12,$41,$89,$38,$FA)	Cogging Term 1: Amplitude=0.008
25	0.1 seconds	Command	TC_RHK	Request HK Packet
26	0.1 seconds	Verify MHS TLM	HK4:7=2	TC Ack: Received Command Count=2

Astrium Ltd owns the copyright of this document which is supplied in confidence and which shall not be used for any purpose other than that for which it is supplied and shall not in whole or in part be reproduced, copied, or communicated to any person without written permission from the owner.

Step No.	Minimum time between Step (n) and Step (n-1)	Type of Action	Action	Notes
27	2.667 seconds	Command	TC_LTD(SCT,13,$60,$00,$00,$05)	Cogging Term 1: Frequency = 24
28	0.1 seconds	Command	TC_RHK	Request HK Packet
29	0.1 seconds	Verify MHS TLM	HK4:7=2	TC Ack: Received Command Count=2
30	2.667 seconds	Command	TC_LTD(SCT,14,$50,$00,$00,$09)	Cogging Term 1: Phase = 320
31	0.1 seconds	Command	TC_RHK	Request HK Packet
32	0.1 seconds	Verify MHS TLM	HK4:7=2	TC Ack: Received Command Count=2
33	2.667 seconds	Command	TC_LTD(SCT,90,$5A,$1C,$AC,$FA)	Cogging Term 2: Amplitude=0.011
34	0.1 seconds	Command	TC_RHK	Request HK Packet
35	0.1 seconds	Verify MHS TLM	HK4:7=2	TC Ack: Received Command Count=2
36	2.667 seconds	Command	TC_LTD(SCT,91,$60,$00,$00,$04)	Cogging Term 2: Frequency=12
37	0.1 seconds	Command	TC_RHK	Request HK Packet
38	0.1 seconds	Verify MHS TLM	HK4:7=2	TC Ack: Received Command Count=2
39	2.667 seconds	Command	TC_LTD(SCT,92,$78,$00,$00,$08)	Cogging Term 2: Phase=240
40	0.1 seconds	Command	TC_RHK	Request HK Packet
41	0.1 seconds	Verify MHS TLM	HK4:7=2	TC Ack: Received Command Count=2
42	2.667 seconds	Command	TC_LTD(SCT,0,$EE,$F6,$80,$00)	SDA Max Demand Codes (RDM) = EE SDA Max Demand Codes (FDM) = F6
43	0.1seconds	Command	TC_RHK	Request HK Packet
44	0.1 seconds	Verify MHS TLM	HK4:7=2	TC Ack: Received Command Count=2
45	2.667 seconds	Command	TC_LTD(SCT,7,$5F,$00,$00,$08)	RDM SDA gain=190.0
46	0.1 seconds	Command	TC_RHK	Request HK Packet
47	0.1 seconds	Verify MHS TLM	HK4:7=2	TC Ack: Received Command Count=2
48	2.667 seconds	Command	TC_LTD(SCT,30,$62,$00,$00,$08)	FDM SDA gain = 196.0
49	0.1 seconds	Command	TC_RHK	Request HK Packet
50	0.1 seconds	Verify MHS TLM	HK4:7=2	TC Ack: Received Command Count=2
51	2.667 seconds	Command	TC_LTD(TLT,87,$2D,$29,$00,$00)	RDM Standby Current Limits
52	0.1 seconds	Command	TC_RHK	Request HK Packet
53	0.1 seconds	Verify MHS TLM	HK4:7=2	TC Ack: Received Command Count=2

Astrium Ltd owns the copyright of this document which is supplied in confidence and which shall not be used for any purpose other than that for which it is supplied and shall not in whole or in part be reproduced, copied, or communicated to any person without written permission from the owner.

Step No.	Minimum time between Step (n) and Step (n-1)	Type of Action	Action	Notes
54	2.667 seconds	Command	TC_LTD(TLT,90,$2D,$29,$00,$00)	FDM Standby Current Limits
55	0.1 seconds	Command	TC_RHK	Request HK Packet
56	0.1 seconds	Verify MHS TLM	HK4:7=2	TC Ack: Received Command Count=2
57	2.667seconds	Command	TC_LTD(TLT,88,$5D,$3C,$00,$00)	RDM Scan Mode current limits
58	0.1 seconds	Command	TC_RHK	Request HK Packet
59	0.1 seconds	Verify MHS TLM	HK4:7=2	TC Ack: Received Command Count=2
60	2.667 seconds	Command	TC_LTD(TLT,91,$5D,$3C,$00,$00)	FDM Scan Mode current limits
61	0.1 seconds	Command	TC_RHK	Request HK Packet
62	0.1 seconds	Verify MHS TLM	HK4:7=2	TC Ack: Received Command Count=2
63	2.667 seconds	Command	TC_LTD(TLT,92,$47,$41,$1E,$17)	5V Power-on mode current limits
64	0.1 seconds	Command	TC_RHK	Request HK Packet
65	0.1 seconds	Verify MHS TLM	HK4:7=2	TC Ack: Received Command Count=2
END				

Astrium Ltd owns the copyright of this document which is supplied in confidence and which shall not be used for any purpose other than that for which it is supplied and shall not in whole or in part be reproduced, copied, or communicated to any person without written permission from the owner.

7.17 Procedure P303 : Load Table Parameters (FM3)

7.17.1 Purpose

This procedure shall be used to initialise the Software Table Parameters.

7.17.2 Constraints

Applicable to FM3 only.

7.17.3 Initial Conditions

The Instrument shall be in Power-on Mode.

Astrium Ltd owns the copyright of this document which is supplied in confidence and which shall not be used for any purpose other than that for which it is supplied and shall not in whole or in part be reproduced, copied, or communicated to any person without written permission from the owner.

7.17.4 Procedure P303 : Load Table Parameters (FM3)

Step No.	Minimum time between Step (n) and Step (n-1)	Type of Action	Action	Notes
1	0 seconds	Command	TC_RHK	Request HK Packet
2	0.1 seconds	Verify MHS TLM	HK3:1=0	Mode Code = Power on
3	2.667 seconds	Command	TC_LTD(ICT,1,$AA,$9A,$AA,$49)	H3/4 LO Side B selected
4	0.1 seconds	Command	TC_RHK	Request HK Packet
5	0.1 seconds	Verify MHS TLM	HK4:7=2	TC Ack: Received Command Count=2
6	2.667 seconds	Command	TC_LTD(DOT,0,$3F,$55,$56,$4C)	H1 to H4 DC Offsets
7	0.1 seconds	Command	TC_RHK	Request HK Packet
8	0.1 seconds	Verify MHS TLM	HK4:7=2	TC Ack: Received Command Count=2
9	2.667 seconds	Command	TC_LTD(DOT,1,$38,$82,$73,$2C)	H5 DC Offset, SPE gain=6.50
10	0.1 seconds	Command	TC_RHK	Request HK Packet
11	0.1 seconds	Verify MHS TLM	HK4:7=2	TC Ack: Received Command Count=2
12	2.667 seconds	Command	TC_LTD(DOT,3,$E6,$58,$7F,$F8)	SPE Min dynamic range = 50%
13	0.1 seconds	Command	TC_RHK	Request HK Packet
14	0.1 seconds	Verify MHS TLM	HK4:7=2	TC Ack: Received Command Count=2
15	2.667 seconds	Command	TC_LTD(SCT,11,$4C,$D3,$F8,$08)	Sensor A Inductosyn Offset=153.656°
16	0.1 seconds	Command	TC_RHK	Request HK Packet
17	0.1 seconds	Verify MHS TLM	HK4:7=2	TC Ack: Received Command Count=2
18	2.667 seconds	Command	TC_LTD(SCT,84,$53,$69,$FC,$09)	Sensor B Inductosyn Offset=333.656°
19	0.1 seconds	Command	TC_RHK	Request HK Packet
20	0.1 seconds	Verify MHS TLM	HK4:7=2	TC Ack: Received CommandCount=2
21	2.667 seconds	Command	TC_LTD(SCT,1,$0F,$3C,$3C,$00)	Earth Scan Error Tolerance =0.15°
22	0.1 seconds	Command	TC_RHK	Request HK Packet
23	0.1 seconds	Verify MHS TLM	HK4:7=2	TC Ack: Received Command Count=2
24	2.667 seconds	Command	TC_LTD(SCT,0,$EE,$F6,$80,$00)	SDA Max Demand Code = EE (RDM) & F6 (FDM)
25	0.1seconds	Command	TC_RHK	Request HK Packet

Astrium Ltd owns the copyright of this document which is supplied in confidence and which shall not be used for any purpose other than that for which it is supplied and shall not in whole or in part be reproduced, copied, or communicated to any person without written permission from the owner.

Step No.	Minimum time between Step (n) and Step (n-1)	Type of Action	Action	Notes
26	0.1 seconds	Verify MHS TLM	HK4:7=2	TC Ack: Received Command Count=2
27	2.667 seconds	Command	TC_LTD(SCT,7,$5F,$00,$00,$08)	RDM SDA gain=190.0
28	0.1 seconds	Command	TC_RHK	Request HK Packet
29	0.1 seconds	Verify MHS TLM	HK4:7=2	TC Ack: Received Command Count=2
30	2.667 seconds	Command	TC_LTD(SCT,30,$62,$00,$00,$08)	FDM SDA gain = 196.0
31	0.1 seconds	Command	TC_RHK	Request HK Packet
32	0.1 seconds	Verify MHS TLM	HK4:7=2	TC Ack: Received Command Count=2
33	2.667 seconds	Command	TC_LTD(TLT,87,$2D,$29,$00,$00)	RDM Standby Current Limits
34	0.1 seconds	Command	TC_RHK	Request HK Packet
35	0.1 seconds	Verify MHS TLM	HK4:7=2	TC Ack: Received Command Count=2
36	2.667 seconds	Command	TC_LTD(TLT,90,$2D,$29,$00,$00)	FDM Standby Current Limits
37	0.1 seconds	Command	TC_RHK	Request HK Packet
38	0.1 seconds	Verify MHS TLM	HK4:7=2	TC Ack: Received Command Count=2
39	2.667seconds	Command	TC_LTD(TLT,88,$5D,$3C,$00,$00)	RDM Scan Mode current limits
40	0.1 seconds	Command	TC_RHK	Request HK Packet
41	0.1 seconds	Verify MHS TLM	HK4:7=2	TC Ack: Received Command Count=2
42	2.667 seconds	Command	TC_LTD(TLT,91,$5D,$3C,$00,$00)	FDM Scan Mode current limits
43	0.1 seconds	Command	TC_RHK	Request HK Packet
44	0.1 seconds	Verify MHS TLM	HK4:7=2	TC Ack: Received Command Count=2
45	2.667 seconds	Command	TC_LTD(TLT,92,$47,$41,$1E,$17)	5V Power-on mode current limits
46	0.1 seconds	Command	TC_RHK	Request HK Packet
47	0.1 seconds	Verify MHS TLM	HK4:7=2	TC Ack: Received Command Count=2
END				

Astrium Ltd owns the copyright of this document which is supplied in confidence and which shall not be used for any purpose other than that for which it is supplied and shall not in whole or in part be reproduced, copied, or communicated to any person without written permission from the owner.

7.18 Procedure P304 : Load Table Parameters (FM4)

7.18.1 Purpose

This procedure shall be used to initialise the Software Table Parameters.

7.18.2 Constraints

Applicable to FM4 only.

7.18.3 Initial Conditions

The Instrument shall be in Power-on Mode.

7.18.4 Procedure P304 : Load Table Parameters (FM4)

Step No.	Minimum time between Step (n) and Step (n-1)	Type of Action	Action	Notes
1	0 seconds	Command	TC_RHK	Request HK Packet
2	0.1 seconds	Verify MHS TLM	HK3:1=0	Mode Code = Power on
3	2.667 seconds	Command	TC_LTD(ICT,1,$A9,$AA,$9A,$49)	H2 and H5 LO Side B Selected
4	0.1 seconds	Command	TC_RHK	Request HK Packet
5	0.1 seconds	Verify MHS TLM	HK4:7=2	TC Ack: Received Command Count=2
6	2.667 seconds	Command	TC_LTD(DOT,0,$3F,$55,$56,$4C)	H1 to H4 DC Offsets
7	0.1 seconds	Command	TC_RHK	Request HK Packet
8	0.1 seconds	Verify MHS TLM	HK4:7=2	TC Ack: Received Command Count=2
9	2.667 seconds	Command	TC_LTD(DOT,1,$38,$82,$73,$2C)	H5 DC Offset, SPE gain=6.50
10	0.1 seconds	Command	TC_RHK	Request HK Packet
11	0.1 seconds	Verify MHS TLM	HK4:7=2	TC Ack: Received Command Count=2

Astrium Ltd owns the copyright of this document which is supplied in confidence and which shall not be used for any purpose other than that for which it is supplied and shall not in whole or in part be reproduced, copied, or communicated to any person without written permission from the owner.

Step No.	Minimum time between Step (n) and Step (n-1)	Type of Action	Action	Notes
12	2.667 seconds	Command	TC_LTD(DOT,3,$E6,$58,$7F,$F8)	SPE Min dynamic range = 50%
13	0.1 seconds	Command	TC_RHK	Request HK Packet
14	0.1 seconds	Verify MHS TLM	HK4:7=2	TC Ack: Received Command Count=2
15	2.667 seconds	Command	TC_LTD(SCT,11,$53,$65,$E3,$09)	Sensor A Inductosyn Offset=333.592°
16	0.1 seconds	Command	TC_RHK	Request HK Packet
17	0.1 seconds	Verify MHS TLM	HK4:7=2	TC Ack: Received Command Count=2
18	2.667 seconds	Command	TC_LTD(SCT,84,$4C,$CB,$C7,$08)	Sensor B Inductosyn Offset=153.592°
19	0.1 seconds	Command	TC_RHK	Request HK Packet
20	0.1 seconds	Verify MHS TLM	HK4:7=2	TC Ack: Received Command Count=2
21	2.667 seconds	Command	TC_LTD(SCT,1,$0F,$3C,$3C,$00)	Earth Scan Error Tolerance =0.15°
22	0.1 seconds	Command	TC_RHK	Request HK Packet
23	0.1 seconds	Verify MHS TLM	HK4:7=2	TC Ack: Received Command Count=2
24	2.667 seconds	Command	TC_LTD(SCT,12,$62,$4D,$D2,$FA)	Cogging Term 1: Amplitude=0.012
25	0.1 seconds	Command	TC_RHK	Request HK Packet
26	0.1 seconds	Verify MHS TLM	HK4:7=2	TC Ack: Received Command Count=2
27	2.667 seconds	Command	TC_LTD(SCT,13,$5C,$00,$00,$04)	Cogging Term 1: Frequency = 11.5
28	0.1 seconds	Command	TC_RHK	Request HK Packet
29	0.1 seconds	Verify MHS TLM	HK4:7=2	TC Ack: Received Command Count=2
30	2.667 seconds	Command	TC_LTD(SCT,14,$69,$00,$00,$08)	Cogging Term 1: Phase = 210
31	0.1 seconds	Command	TC_RHK	Request HK Packet
32	0.1 seconds	Verify MHS TLM	HK4:7=2	TC Ack: Received Command Count=2
33	2.667 seconds	Command	TC_LTD(SCT,90,$41,$89,$38,$F9)	Cogging Term 2: Amplitude=0.004
34	0.1 seconds	Command	TC_RHK	Request HK Packet
35	0.1 seconds	Verify MHS TLM	HK4:7=2	TC Ack: Received Command Count=2
36	2.667 seconds	Command	TC_LTD(SCT,91,$5C,$00,$00,$05)	Cogging Term 2: Frequency=23
37	0.1 seconds	Command	TC_RHK	Request HK Packet
38	0.1 seconds	Verify MHS TLM	HK4:7=2	TC Ack: Received Command Count=2

Astrium Ltd owns the copyright of this document which is supplied in confidence and which shall not be used for any purpose other than that for which it is supplied and shall not in whole or in part be reproduced, copied, or communicated to any person without written permission from the owner.

Step No.	Minimum time between Step (n) and Step (n-1)	Type of Action	Action	Notes
39	2.667 seconds	Command	TC_LTD(SCT,92,$48,$80,$00,$09)	Cogging Term 2: Phase=290
40	0.1 seconds	Command	TC_RHK	Request HK Packet
41	0.1 seconds	Verify MHS TLM	HK4:7=2	TC Ack: Received Command Count=2
42	2.667 seconds	Command	TC_LTD(SCT,0,$F5,$EF,$80,$00)	SDA Max Demand Code = F5 (RDM) & EF (FDM)
43	0.1seconds	Command	TC_RHK	Request HK Packet
44	0.1 seconds	Verify MHS TLM	HK4:7=2	TC Ack: Received Command Count=2
45	2.667 seconds	Command	TC_LTD(SCT,7,$62,$00,$00,$08)	RDM SDA gain=196.0
46	0.1 seconds	Command	TC_RHK	Request HK Packet
47	0.1 seconds	Verify MHS TLM	HK4:7=2	TC Ack: Received Command Count=2
48	2.667 seconds	Command	TC_LTD(SCT,30,$5F,$80,$00,$08)	FDM SDA gain = 191.0
49	0.1 seconds	Command	TC_RHK	Request HK Packet
50	0.1 seconds	Verify MHS TLM	HK4:7=2	TC Ack: Received Command Count=2
51	2.667 seconds	Command	TC_LTD(TLT,87,$2D,$29,$00,$00)	RDM Standby Current Limits
52	0.1 seconds	Command	TC_RHK	Request HK Packet
53	0.1 seconds	Verify MHS TLM	HK4:7=2	TC Ack: Received Command Count=2
54	2.667 seconds	Command	TC_LTD(TLT,90,$2D,$29,$00,$00)	FDM Standby Current Limits
55	0.1 seconds	Command	TC_RHK	Request HK Packet
56	0.1 seconds	Verify MHS TLM	HK4:7=2	TC Ack: Received Command Count=2
57	2.667seconds	Command	TC_LTD(TLT,88,$5D,$3C,$00,$00)	RDM Scan Mode current limits
58	0.1 seconds	Command	TC_RHK	Request HK Packet
59	0.1 seconds	Verify MHS TLM	HK4:7=2	TC Ack: Received Command Count=2
60	2.667 seconds	Command	TC_LTD(TLT,91,$5D,$3C,$00,$00)	FDM Scan Mode current limits
61	0.1 seconds	Command	TC_RHK	Request HK Packet
62	0.1 seconds	Verify MHS TLM	HK4:7=2	TC Ack: Received Command Count=2
63	2.667 seconds	Command	TC_LTD(TLT,92,$47,$41,$1E,$17)	5V Power-on mode current limits
64	0.1 seconds	Command	TC_RHK	Request HK Packet
65	0.1 seconds	Verify MHS TLM	HK4:7=2	TC Ack: Received Command Count=2

Astrium Ltd owns the copyright of this document which is supplied in confidence and which shall not be used for any purpose other than that for which it is supplied and shall not in whole or in part be reproduced, copied, or communicated to any person without written permission from the owner.

Step No.	Minimum time between Step (n) and Step (n-1)	Type of Action	Action	Notes
END				

Astrium Ltd owns the copyright of this document which is supplied in confidence and which shall not be used for any purpose other than that for which it is supplied and shall not in whole or in part be reproduced, copied, or communicated to any person without written permission from the owner.

7.19 Procedure P305 : Timecode Patch

7.19.1 Purpose

This procedure shall be used to modify the MHS Instrument On-Board Software (MINOS) so that the MHS Timecode, as reported in the MHS Packets transmitted to the platform, is correctly synchronised to the 8SP signal. Refer to RD1 and RD2 for details.

7.19.2 Constraints

To be applied in Power-on Mode only, shortly after switching on power. Note that the Load Memory Data Commands must be performed in the exact order shown below.

7.19.3 Initial Conditions

The Instrument shall be in Power-on Mode.

Astrium Ltd owns the copyright of this document which is supplied in confidence and which shall not be used for any purpose other than that for which it is supplied and shall not in whole or in part be reproduced, copied, or communicated to any person without written permission from the owner.

7.19.4 Procedure P305 : Timecode Patch

Step No.	Minimum time between Step (n) and Step (n-1)	Type of action	Action	Notes
1	0 seconds	Command	TC_RHK	Request HK Packet
2	2.667 seconds	Verify MHS TLM	HK3:1=0 HK5:0=0	Mode Code = Power on Fault Code = no faults or warnings
3	0.1 seconds	Command	TC_LMD($036000, $9100, $01FA, $9100, $026F)	Load Memory Data
4	0.1 seconds	Command	TC_LMD($036004, $7070, $4217, $7400, $7400)	Load Memory Data
5	0.1 seconds	Command	TC_LMD($036010, $8510, $047F, $9010, $01FA)	Load Memory Data
6	0.1 seconds	Command	TC_LMD($036014, $9120, $026F, $7070, $4217)	Load Memory Data
7	0.1 seconds	Command	SD_REM($036000)	Request Extended Memory Data Packet on SD Bus (Note: several Memory Data Packets could be requested on the Cmd/Tlm Bus instead)
8	2.667 seconds	Verify MHS EMD	EMD3:1=$F EMD:1=$036000 EMD:2= $9100,$01FA,$9100,$026F $7070,$4217,$7400,$7400 $7400,$7400,$7400,$7400 $7400,$7400,$7400,$7400 $8510,$047F,$9010,$01FA $9120,$026F,$7070,$4217 $7400 rest of packet not checked.	Verify addresses $036000...$036017
9	0.1 seconds	Command	TC_LMD($004213, $7070, $E010, $7400, $7400)	Load Memory Data

Astrium Ltd owns the copyright of this document which is supplied in confidence and which shall not be used for any purpose other than that for which it is supplied and shall not in whole or in part be reproduced, copied, or communicated to any person without written permission from the owner.

Step No.	Minimum time between Step (n) and Step (n-1)	Type of action	Action	Notes
10	0.1 seconds	Command	TC_LMD($004210, $7070, $E000, $7400, $7070)	Load Memory Data
11	0.1 seconds	Command	SD_REM($036000)	Request Extended Memory Data Packet on SD Bus (Note: several Memory Data Packets could be requested on the Cmd/Tlm Bus instead)
12	2.667 seconds	Verify MHS EMD	EMD3:1=$F EMD:1=$004200 EMD:2= $7070,$E000,$7400,$7070 $E010,$7400,$7400 rest of packet not checked.	Verify addresses $004210...$004216
13	0.1 seconds	Command	TC_RHK	Request HK Packet
14	2.667 seconds	Verify MHS TLM	HK3:1=0 HK5:0=0	Mode Code = Power on Fault Code = no faults or warnings
END				

Astrium Ltd owns the copyright of this document which is supplied in confidence and which shall not be used for any purpose other than that for which it is supplied and shall not in whole or in part be reproduced, copied, or communicated to any person without written permission from the owner.

7.20 Procedure P310 : Change Fixed View Position (absolute)

7.20.1 Purpose

This procedure shall be used to move the Reflector to a new position. The new position is defined as an absolute position with a value between 0° and 360°.

The Reflector will move the shortest distance to the new position (ie. forwards or backwards).

7.20.2 Constraints

None.

7.20.3 Initial Conditions

The Instrument shall be in Fixed View Mode.

Astrium Ltd owns the copyright of this document which is supplied in confidence and which shall not be used for any purpose other than that for which it is supplied and shall not in whole or in part be reproduced, copied, or communicated to any person without written permission from the owner.

7.20.4 Procedure P310 : Change Fixed View Position (absolute)

Step No.	Minimum time between Step (n) and Step (n-1)	Type of action	Action	Notes
1	n/a	Command	TC_FVP(new position)	Request a new position (0° =< new position < 360°)
2	8 seconds	Command	TC_RHK	Request HK Packet
3	0.1 seconds	Verify MHS TLM	HK3:1=4 HK5=0	Mode =Fixed View Fault code = no faults or warnings
4	2.667 seconds	Command	SD_RSD	Request SD Packet
9	0.1 seconds	Verify MHS SD	SD3:1=4 SD9:1=1 SD9:2=1 SD11:1:6=new position ± 0.6°	Mode = Fixed View DC Offsets Flag = Valid Scan Control Flag = Valid Reflector parked within 0.6° of new position
END				

Astrium Ltd owns the copyright of this document which is supplied in confidence and which shall not be used for any purpose other than that for which it is supplied and shall not in whole or in part be reproduced, copied, or communicated to any person without written permission from the owner.

7.21 Procedure P311 : Change Fixed View Position (relative)

7.21.1 Purpose

This procedure shall be used to move the Reflector to a new position. The new position is defined as:-

new position = current position + STEP

where -14.22° =< STEP <= + 14.11°

7.21.2 Constraints

None.

7.21.3 Initial Conditions

The Instrument shall be in Fixed View Mode.

Astrium Ltd owns the copyright of this document which is supplied in confidence and which shall not be used for any purpose other than that for which it is supplied and shall not in whole or in part be reproduced, copied, or communicated to any person without written permission from the owner.

7.21.4 Procedure P311 : Change Fixed View Position (relative)

Step No.	Minimum time between Step (n) and Step (n-1)	Type of action	Action	Notes
1	n/a	Command	TC_FVP(STEP)	Request a new position (-14.22° =< STEP =< +14.11°)
2	8 seconds	Command	TC_RHK	Request HK Packet
3	0.1 seconds	Verify MHS TLM	HK3:1=4 HK5=0	Mode =Fixed View Fault code = no faults or warnings
4	2.667 seconds	Command	SD_RSD	Request SD Packet
9	0.1 seconds	Verify MHS SD	SD3:1=4 SD9:1=1 SD9:2=1 SD11:1:6=new position ± 0.6°	Mode = Fixed View DC Offsets Flag = Valid Scan Control Flag = Valid Reflector parked within 0.6° of new position
END				

Astrium Ltd owns the copyright of this document which is supplied in confidence and which shall not be used for any purpose other than that for which it is supplied and shall not in whole or in part be reproduced, copied, or communicated to any person without written permission from the owner.

7.22 Procedure P320 : Load Table Data

7.22.1 Purpose

This procedure shall be used to change the value of a software table parameter. There are 4 software tables:-

- Instrument Configuration Table (ICT): Table Ref = 0, Data Refs 0 to 8
- Telemetry Limits Table (TLT): Table Ref = 1, Data Refs 1 to 99
- Scan Control Table (SCT): Table Ref = 2, Data Refs 0 to 101
- DC Offsets Table (DOT): Table Ref = 3, Data Refs 0 to 3

Refer to section 4.8 and AD1 Appendices A..D for details about the use of these tables.

This procedure allows one or more parameters to be loaded and then verifies the correct loading of the parameter(s).

7.22.2 Constraints

Table parameters are used to change the detailed behaviour of many different functions. Refer to AD1 for the validity of changing a parameter in any particular mode of operation.

7.22.3 Initial Conditions

The Instrument shall be in Power-on, Warm-up, Standby or Fault Mode.

Astrium Ltd owns the copyright of this document which is supplied in confidence and which shall not be used for any purpose other than that for which it is supplied and shall not in whole or in part be reproduced, copied, or communicated to any person without written permission from the owner.

7.22.4 Procedure P320 : Load Table Data

Step No.	Minimum time between Step (n) and Step (n-1)	Type of action	Action	Notes
1	0 seconds	Command	TC_LTD(Table ref, Data ref, data1, data2, data3, data4)	Load a table parameter (Refer to AD1 for parameter definitions).
2	2.667 seconds	Command	TC_RHK	Request HK Packet
3	0.1 seconds	Verify MHS TLM	HK4:7=2	TC Ack: Received Command Count=2
4			Repeat steps 1, 2 and 3 until all required parameters are loaded.	
5	2.667 seconds	Command	SD_REM(start address)	Request Extended Memory Packet (Refer to AD1 for address of each table parameter)
6	0.1 seconds	Verify MHS EMP	EMP3:1=$F EMP4:1=start address EMP4:2=data	Packet = Extended Memory Packet verify start address Verify the data at the addresses corresponding to the loaded table parameters are correct
7			Repeat steps 5 and 6 until all table parameters have been verified.	
END				

Astrium Ltd owns the copyright of this document which is supplied in confidence and which shall not be used for any purpose other than that for which it is supplied and shall not in whole or in part be reproduced, copied, or communicated to any person without written permission from the owner.

7.23 Procedure P321 : Read Table Parameters

7.23.1 Purpose

This procedure shall be used to verify the value of a software table parameter. This is achieved by reading the relevant memory address.

Refer to section 4.8 and AD1 Appendices A..D for details about the use of these tables and the memory address of each parameter..

7.23.2 Constraints

None.

7.23.3 Initial Conditions

The Instrument shall be in Power-on, Warm-up, Standby or Fault Mode.

Astrium Ltd owns the copyright of this document which is supplied in confidence and which shall not be used for any purpose other than that for which it is supplied and shall not in whole or in part be reproduced, copied, or communicated to any person without written permission from the owner.

7.23.4 Procedure P321 : Read Table Parameters

Step No.	Minimum time between Step (n) and Step (n-1)	Type of action	Action	Notes
1	2.667 seconds	Command	SD_REM(start address)	Request Extended Memory Packet (Refer to AD1 for address of each table parameter)
2	0.1 seconds	Verify MHS EMP	EMP3:1=$F EMP4:1=start address EMP4:2=data	Packet = Extended Memory Packet verify start address Verify the data at the addresses corresponding to the loaded table parameters are correct
3			Repeat steps 1 and 2 until all table parameters have been verified.	
END				

Astrium Ltd owns the copyright of this document which is supplied in confidence and which shall not be used for any purpose other than that for which it is supplied and shall not in whole or in part be reproduced, copied, or communicated to any person without written permission from the owner.

7.24 Procedure P330 : Gain and DC Offset Initialisation / optimisation

7.24.1 Purpose

This procedure shall be used to initialise and/or optimise the Receiver Gain and SPE DC Offset settings. This ensures that radiometric readings are valid and optimum Instrument performance is achieved by maximising the use of the Instrument's dynamic range.

7.24.2 Constraints

It is expected that this procedure will be done as part of the in-flight commissioning and then as required (eg. as part of a performance checkout or after detecting a DC Offset Error flag (HK5:5, SD5:5) during normal Scan Mode or Fixed View Mode Operation).

7.24.3 Initial Conditions

The Instrument shall be in Standby Mode or Scan Mode.

Astrium Ltd owns the copyright of this document which is supplied in confidence and which shall not be used for any purpose other than that for which it is supplied and shall not in whole or in part be reproduced, copied, or communicated to any person without written permission from the owner.

7.24.4 Procedure P330 : Gain and DC Offset Initialisation / optimisation

Step No.	Minimum time between Step (n) and Step (n-1)	Type of action	Action	Notes
			If already in Scan Mode then proceed to step 3	
1	n/a	Command	TC_RHK	Request HK Packet
2	0.1 seconds	Verify MHS TLM	HK3:1=2 HK5=0	Mode =Standby Fault code = no faults or warnings
3	2.667 seconds	Command	TC_LTD(ICT, 0, 00, 00, $FF, $E0)	Set Automatic DC Offset Control
4	0.1 seconds	Command	TC_RHK	Request HK Packet
5	0.1 seconds	Verify MHS TLM	HK4:7=2	TC Ack: Received Command Count=2
			If already in Scan Mode then proceed to step 7	
6	2.667	Command	TC_STM(Scan)	Select Scan Mode
7	16 seconds	Command	TC_RSD	Request SD Packet
8	0.1 seconds	Verify MHS TLM	SD3:1=3 Record SD10:12..16 Record SD10:1..5 Record SD11,12,13	Mode =Scan Current Rx Gains for Channels H1..H5 Current DC Offsets for Channels H1..H5 Record all the pixel values for all channels (5 x 98 values)
			If necessary, MHS can now be left in Scan Mode until the next ground station pass while steps 9 and 10 are performed.	
9		Calculate	Verify/Calculate the optimum gain settings for each channel (see below)	
10		Calculate	Verify/calculate the optimum DC offset settings (see below).	

Astrium Ltd owns the copyright of this document which is supplied in confidence and which shall not be used for any purpose other than that for which it is supplied and shall not in whole or in part be reproduced, copied, or communicated to any person without written permission from the owner.

Step No.	Minimum time between Step (n) and Step (n-1)	Type of action	Action	Notes
11	2.667	Command	TC_STM(Standby)	Select Standby Mode
12	8 seconds	Command	TC_RHK	Request HK Packet
13	0.1 seconds	Verify MHS TLM	HK3:1=2 HK5=0	Mode =Standby Fault code = no faults or warnings
14		Procedure	Change the Rx Gains as required using P331.	
15	2.667 seconds	Command	TC_LTD (ICT, 0, 00, 00, 00, $E0)	Set Manual DC Offsets
16	0.1 seconds	Command	TC_RHK	Request HK Packet
17	0.1 seconds	Verify MHS TLM	HK4:7=2	TC Ack: Received Command Count=2
18	2.667 seconds	Command	TC_LTD (DOT, 0, H1 New DC Offset, H2 New DC Offset, H3 New DC Offset, H4 New DC Offset)	Set optimised DC Offsets for channels H1..H4
19	0.1 seconds	Command	TC_RHK	Request HK Packet
20	0.1 seconds	Verify MHS TLM	HK4:7=2	TC Ack: Received Command Count=2
21	2.667 seconds	Command	TC_LTD (DOT, 1, H5 New DC Offset, $82, $73, $2C)	Set optimised DC Offset for channel H5
22	0.1 seconds	Command	TC_RHK	Request HK Packet
23	0.1 seconds	Verify MHS TLM	HK4:7=2	TC Ack: Received Command Count=2
			If Scan Mode not required then proceed to END	
24	2.667	Command	TC_STM(Scan)	Select Standby Mode
25	8 seconds	Command	TC_RHK	Request HK Packet

Astrium Ltd owns the copyright of this document which is supplied in confidence and which shall not be used for any purpose other than that for which it is supplied and shall not in whole or in part be reproduced, copied, or communicated to any person without written permission from the owner.

Step No.	Minimum time between Step (n) and Step (n-1)	Type of action	Action	Notes
26	0.1 seconds	Verify MHS TLM	HK3:1=3 HK5=0	Mode =Scan Fault code = no faults or warnings
END				

Astrium Ltd owns the copyright of this document which is supplied in confidence and which shall not be used for any purpose other than that for which it is supplied and shall not in whole or in part be reproduced, copied, or communicated to any person without written permission from the owner.

7.24.5 Calculation of Optimum Rx Gains

Operation in Scan Mode with Automatic DC Offsets ensures that, provided the Receiver gain is not too high, all radiometric readings will be within the dynamic range of the SPE electronics (ie no saturated readings):

No saturated readings:- $0000 < pixel value < $FFF0

Where pixels values are:-

SD11:1..90:1..5	Pixels 1..90 of Earth View; Channels H1..H5
SD12:1..4:1..5	Pixels 1..4 of Space View; Channels H1..H5
SD13:1..4:1..5	Pixels 1..4 of OBCT View; Channels H1..H5

If any of the above pixels are saturated after performing Scan Mode with Automatic DC Offsets selected, then the gain is too high. In this case, the Receiver Gain of the relevant channel should be reduced using procedure P331 and procedure P330 restarted.

Assuming no saturated values, the Rx Gains are optimised as follows:-

For a given channel (H1..H5), calculate the dynamic range of the signal:-

Signal Dynamic Range, SDR = maximum reading – minimum reading

The minimum reading will occur during the Space View (SD12). The maximum reading may occur in either the Earth View (SD11) or the OBCT View (SD13).

The Gains can then be optimised as follows:-

Signal Dynamic Range, SDR	Gain change required	New SDR
SDR < $75EF	Add 3dB	SDR = SDR * 1.95
$75EF <= SDR < $936B	Add 2dB	SDR = SDR * 1.56
$936B <= SDR < $B846	Add 1dB	SDR = SDR * 1.25
$B846 <= SDR	No change	SDR = SDR

Establish the new gains required for each channel as follows:-

Astrium Ltd owns the copyright of this document which is supplied in confidence and which shall not be used for any purpose other than that for which it is supplied and shall not in whole or in part be reproduced, copied, or communicated to any person without written permission from the owner.

Channel	Science Data Packet Reference	Current Gain Code (from packet, in binary)	Current Gain (dB) (see table below)	Current SDR (hex)	Gain Change Required (dB)	New Gain Required (dB) (0, 1, 2, 3 dB)
H1	SD10:12					
H2	SD10:13					
H3	SD10:14					
H4	SD10:15					
H5	SD10:16					

The correspondence between Gain Code (binary) and Gain (dB) is given by:-

Gain Code (binary)	Gain (dB)
000	0 dB
001	1 dB
010	2 dB
011	3 dB
1XX	Not valid

Astrium Ltd owns the copyright of this document which is supplied in confidence and which shall not be used for any purpose other than that for which it is supplied and shall not in whole or in part be reproduced, copied, or communicated to any person without written permission from the owner.

7.24.6 Calculation of Optimum DC Offsets

Verify there are no saturated pixel readings, as described in 7.22.5.

For each channel, determine the minimum and maximum pixel readings, Pmin and Pmax, as described in 7.22.5.

For each channel, calculate the DC Offset Correction as follows:-

$$P'\max = 6.5 \times 6552 \times \left\{ 10^{\frac{G'-G}{10}} \times \left[\frac{P\max}{6.5 \times 6552} + \frac{DC}{25.5} \right] - \frac{DC}{25.5} \right\}$$

$$P'\min = 6.5 \times 6552 \times \left\{ 10^{\frac{G'-G}{10}} \times \left[\frac{P\min}{6.5 \times 6552} + \frac{DC}{25.5} \right] - \frac{DC}{25.5} \right\}$$

where G=current gain; G'=new gain (gain in dB, ie 0, 1, 2 or 3)
DC = current DC offset setting (in decimal)

$$DC_offset_correction = \frac{1}{1670} \times \left(\frac{P'\min + P'\max}{2} - 32760 \right)$$

For each channel, calculate the new DC Offset as follows:-

New DC Offset = Current DC Offset + ROUND TO NEAREST INTEGER OF (DC Offset Correction)

Astrium Ltd owns the copyright of this document which is supplied in confidence and which shall not be used for any purpose other than that for which it is supplied and shall not in whole or in part be reproduced, copied, or communicated to any person without written permission from the owner.

Parameter description	Parameter	units	H1	H2	H3	H4	H5
DC offset (SD10:1..5)		hex					
DC offset	DC	dec					
Current Gain (SD10:12..16)	G	dB					
New Gain	G'	dB					
Current min pixel reading		hex					
Current min pixel reading	Pmin	dec					
Current max pixel reading		hex					
Current max pixel reading	Pmax	dec					
Derived min pixel reading		hex					
Derived min pixel reading	P'min	dec					
Derived max pixel reading		hex					
Derived max pixel reading	P'max	dec					
DC Offset Correction		dec					
New DC Offset		dec					
New DC Offset		hex					

Astrium Ltd owns the copyright of this document which is supplied in confidence and which shall not be used for any purpose other than that for which it is supplied and shall not in whole or in part be reproduced, copied, or communicated to any person without written permission from the owner.

7.25 Procedure P331 : Setting of Rx Gains

7.25.1 Purpose

This procedure shall be used to set the Receiver Gains. This may be required as a result of checking the Rx Gains (P330).

At the beginning of life, a gain of 0dB will be required and this is the default setting after switch-on of MHS. The gain of the front of the Rx is expected to reduce over life by up to 3dB. This is compensated by commanding an increase in the back-end gain of up to 3dB, in steps of 1 dB.

7.25.2 Constraints

It is expected that this procedure will be required at infrequent intervals over the orbit lifetime of MHS.

7.25.3 Initial Conditions

The Instrument shall be in Standby Mode.

Astrium Ltd owns the copyright of this document which is supplied in confidence and which shall not be used for any purpose other than that for which it is supplied and shall not in whole or in part be reproduced, copied, or communicated to any person without written permission from the owner.

7.25.4 Procedure P331 : Rx Gain Setting

Step No.	Minimum time between Step (n) and Step (n-1)	Type of action	Action	Notes
1	n/a	Command	TC_RHK	Request HK Packet
2	0.1 seconds	Verify MHS TLM	HK3:1=2	Mode =Standby
3	2.667 seconds	Command	If required H1 Gain = 0, 1 or 2dB THEN TC_SWC(CMD1:23)	Reset both H1 gain blocks
4	2.667 seconds	Command	If required H1 Gain = 1 or 3dB THEN TC_SWC(CMD1:24)	Set H1 1dB gain block
5	2.667 seconds	Command	If required H1 Gain = 2 or 3 dB THEN TC_SWC(CMD1:25)	Set H1 2dB gain block
6	2.667 seconds	Command	TC_RSD	Request SD Packet
7	0.1 seconds	Verify MHS TLM	Verify SD10:12 = 00 SD10:12 = 01 SD10:12 = 10 SD10:12 = 11	H1 gain = required gain H1 Gain = 0dB H1 Gain = 1dB H1 Gain = 2dB H1 Gain = 3dB
8	2.667 seconds	Command	If required H2 Gain = 0, 1 or 2dB THEN TC_SWC(CMD1:26)	Reset both H2 gain blocks
9	2.667 seconds	Command	If required H2 Gain = 1 or 3dB THEN TC_SWC(CMD1:27)	Set H2 1dB gain block
10	2.667 seconds	Command	If required H2 Gain = 2 or 3 dB THEN TC_SWC(CMD1:28)	Set H2 2dB gain block
11	2.667 seconds	Command	TC_RSD	Request SD Packet

Astrium Ltd owns the copyright of this document which is supplied in confidence and which shall not be used for any purpose other than that for which it is supplied and shall not in whole or in part be reproduced, copied, or communicated to any person without written permission from the owner.

Step No.	Minimum time between Step (n) and Step (n-1)	Type of action	Action	Notes
12	0.1 seconds	Verify MHS TLM	Verify SD10:13 = 00 SD10:13 = 01 SD10:13 = 10 SD10:13 = 11	H2 gain = required gain H2 Gain = 0dB H2 Gain = 1dB H2 Gain = 2dB H2 Gain = 3dB
13	2.667 seconds	Command	If required H3 Gain = 0, 1 or 2dB THEN TC_SWC(CMD1:29)	Reset both H3 gain blocks
14	2.667 seconds	Command	If required H3 Gain = 1 or 3dB THEN TC_SWC(CMD1:30)	Set H3 1dB gain block
15	2.667 seconds	Command	If required H3 Gain = 2 or 3 dB THEN TC_SWC(CMD1:31)	Set H3 2dB gain block
16	2.667 seconds	Command	TC_RSD	Request SD Packet
17	0.1 seconds	Verify MHS TLM	Verify SD10:14 = 00 SD10:14 = 01 SD10:14 = 10 SD10:14 = 11	H3 gain = required gain H3 Gain = 0dB H3 Gain = 1dB H3 Gain = 2dB H3 Gain = 3dB
18	2.667 seconds	Command	If required H4 Gain = 0, 1 or 2dB THEN TC_SWC(CMD1:32)	Reset both H4 gain blocks
19	2.667 seconds	Command	If required H4 Gain = 1 or 3dB THEN TC_SWC(CMD1:33)	Set H4 1dB gain block
20	2.667 seconds	Command	If required H4 Gain = 2 or 3 dB THEN TC_SWC(CMD1:34)	Set H4 2dB gain block
21	2.667 seconds	Command	TC_RSD	Request SD Packet

Astrium Ltd owns the copyright of this document which is supplied in confidence and which shall not be used for any purpose other than that for which it is supplied and shall not in whole or in part be reproduced, copied, or communicated to any person without written permission from the owner.

Step No.	Minimum time between Step (n) and Step (n-1)	Type of action	Action	Notes
22	0.1 seconds	Verify MHS TLM	Verify SD10:15 = 00 SD10:15 = 01 SD10:15 = 10 SD10:15 = 11	H4 gain = required gain H4 Gain = 0dB H4 Gain = 1dB H4 Gain = 2dB H4 Gain = 3dB
23	2.667 seconds	Command	If required H5 Gain = 0, 1 or 2dB THEN TC_SWC(CMD1:35)	Reset both H5 gain blocks
24	2.667 seconds	Command	If required H5 Gain = 1 or 3dB THEN TC_SWC(CMD1:36)	Set H5 1dB gain block
25	2.667 seconds	Command	If required H5 Gain = 2 or 3 dB THEN TC_SWC(CMD1:37)	Set H5 2dB gain block
26	2.667 seconds	Command	TC_RSD	Request SD Packet
27	0.1 seconds	Verify MHS TLM	Verify SD10:16 = 00 SD10:16 = 01 SD10:16 = 10 SD10:16 = 11	H5 gain = required gain H5 Gain = 0dB H5 Gain = 1dB H5 Gain = 2dB H5 Gain = 3dB
END				

Astrium Ltd owns the copyright of this document which is supplied in confidence and which shall not be used for any purpose other than that for which it is supplied and shall not in whole or in part be reproduced, copied, or communicated to any person without written permission from the owner.

7.26 Procedure P410 : Generate Status Report

It is expected that the ground segment will periodically record a full set of instrument telemetry and data. This should be compared with the baseline data set to assess the current health and status of the instrument. Comparison with previous data sets will allow any drifts and long term trends to be identified.

In addition, the ground segment should check the Fault Code of every packet and keep a log of any warning flags. A log should also be kept of any transitions to Fault Mode (caused by a Fault Flag being set) and any other anomalous behaviour.

This procedure is purely a monitoring procedure and the Instrument can be left in its nominal science data acquisition mode (ie Scan Mode or Fixed View Mode). The data is contained in the Science Data Packet. A subset of the data is contained in the HK Data Packet.

The following table defines the telemetry parameters which should be monitored and recorded.

Astrium Ltd owns the copyright of this document which is supplied in confidence and which shall not be used for any purpose other than that for which it is supplied and shall not in whole or in part be reproduced, copied, or communicated to any person without written permission from the owner.

MHS STATUS REPORT	
Date and time of this report (ie. Packet Time Code SD2:1 and SD2:2)	
Date and time of previous report (ie. Packet Time Code SD2:1 and SD2:2)	
Reason for generating report	(eg. routine period report; due to an anomaly)
Record all digital status channels:- • SD3:1 Mode Code • SD3:2 PIE ID • TM1:1 to TM1:11 Switch status • TM2:1 to TM2:4 Bilevel status • TM3:1 to TM3:13 BIM status • SD9:3 Scan Profile Number • SD10:11 SPE MUX Code • SD10:12 to SD10:16 Rx Gains	Compare with expected status
Record all analogue telemetry channels:- • TM4:1 to TM4:24 Thermistors • TM5:1 to TM5:6 Current consumptions • TM6:1 to TM6:8 PRT temperatures	Compare with baseline values. Compare with previous reports and assess drifts and trends.

Astrium Ltd owns the copyright of this document which is supplied in confidence and which shall not be used for any purpose other than that for which it is supplied and shall not in whole or in part be reproduced, copied, or communicated to any person without written permission from the owner.

Record date and time of each occurrence of fault and warning flags:- • SD4:1..4 Telecommand Acknowledgement Flags • SD5:1 Current Monitor • SD5:2 Thermistor Monitor • SD5:3 Switch Fault • SD5:4 Processor Fault • SD5:5 DC Offset Error • SD5:6 Scan Control Error • SD5:7 Ref Clock Error • SD5:8 RDM Motor Trip • SD5:9 FDM Motor Trip • SD5:10 PROM Switch Error • SD9:1 DC Offset Valid Flag • SD9:2 Scan Control Valid Flag • SD10:6 to SD10:10 Rx Channel Valid Flags	Count total number of each type of error since last report. Assess importance of errors and take corrective action if necessary.
Record date and time of each Fault Mode transition and the recovery actions taken.	Count total number of Fault Modes since last report. Assess importance and take corrective action if necessary.
Record DC offsets for each Rx channel (SD10:1..5)	Compare with baseline values. Compare with previous values and assess drifts and trends.
Record Mid-Pixel Positions:- • SD11:1:6 to SD11:90:6 Earth View Pixels • SD12:1:6 to SD12:4:6 OBCT View Pixels • SD13:1:6 to SD13:4:6 Space View Pixels	Calculate Scan Control Error (plot) and compare with baseline and previous results.

Astrium Ltd owns the copyright of this document which is supplied in confidence and which shall not be used for any purpose other than that for which it is supplied and shall not in whole or in part be reproduced, copied, or communicated to any person without written permission from the owner.

7.27 General Operational Constraints

This section describes general constraints and limitations of the operation of the MHS Instrument. The routine procedures described above, and the special procedures described in section 8, have been written taking into account these constraints. Therefore, these constraints will never cause a problem if the procedures are followed. They are included here for reference in case new procedures are developed in the future.

The following constraints should be noted:-

- It is possible for the LO redundancies not to be set up in accordance with the ICT on the Power-on to Warm-up transition under the following conditions:-
    - In Power-on Mode a Rx channel is switched on with LO A selected.
    - The ICT defines LO B.
    - On the transition to Warm-up Mode, the select LO B will not be executed because this is an illegal command when the channel is on.
- It is possible that the reception of an illegal command may not be reported in the Telecommand and Acknowledgement Field of the next packet, but one packet later. The first packet after the illegal command will indicate TC Received Count=2, Legal=1, and the following packet will indicate TC Received Count=1, Legal=0. This will depend on the exact timing of command reception and whether the software has had chance to process the command before outputting the next packet.
- The Fine Time Code value in the packet header is occasionally 5556 hex instead of 5555 hex. (1 LSB=2^{-16} seconds)
- Extended and normal Memory Packets : Time Code out by one scan period.
- The time code in Memory Data Packets and Extended Memory Data Packets may be up to ±1 scan period different to the actual time that the data was read.
- An attempt to enter Standby Mode from Warm-up Mode with the SPE/SCE off will cause a 'BIM error' (ie. EE internal intermodule bus error) and cause a transition into Fault Mode (TBC). Note that if Automatic Mode Transitions are selected in Power-on or Warm-up mode, then the Warm-up to Standby transition can occur automatically.
- Mode Transitions (eg. return from self-test): packet has HK data instead of test data, mode code = self-test.
- On mode transitions, it is possible for one packet to be generated with some of the data fields set to zero.
- On the Standby to Scan Mode transition, it is possible that a packet is not generated, causing two identical packets (with same time code) to be transferred.
- EM only: Main Bus switching (A to B, B to A) may fail if bus voltage is less than 28V.
- At switch-on, the Instrument may enter Fault Mode with the REF Clock Error Flag set (Fault Code). Recovery action => send Set Mode (Power-on) command.

Astrium Ltd owns the copyright of this document which is supplied in confidence and which shall not be used for any purpose other than that for which it is supplied and shall not in whole or in part be reproduced, copied, or communicated to any person without written permission from the owner.

- 'Pixel 1 Anomaly'. The first pixel reading of the first packet on entry to Fixed View Mode from Standby Mode is invalid.
- ***"Motor Position" or "Motor Current Demand" data equal to "FFFF" may be observed occasionally in Motor Self-Test Packets. These indicate a software overrun which is acceptable in Self-Test Mode. For post-processing purposes the "FFFF" may be replaced by the average of the two adjacent samples.***

7.28 General Lifetime Constraints

The following limitations due to the lifetime of components should be noted:-

- The relays within the Instrument should not be operated unnecessarily as they have a limited number of on/off cycles (1,000 in-flight design requirement, but typically 100,000 is achieved). The relays will perform one on/off cycle during a routine operation (Off to Scan Mode to Off). They are also operated during special operations in response to the Switch Command TC_SWC(CMD1:n), and during the TMTC Self-test Mode. In particular, the TMTC Self-Test Mode should not be selected with the 'repeat on' feature otherwise the relays will be cycled continuously at about 0.5Hz.

Astrium Ltd owns the copyright of this document which is supplied in confidence and which shall not be used for any purpose other than that for which it is supplied and shall not in whole or in part be reproduced, copied, or communicated to any person without written permission from the owner.

8. SPECIAL PROCEDURES

8.1 Introduction

The following procedures are provided to achieve special operations of the Instrument:-

REF No.	Procedure Name	Use	Section
P999	Emergency Switch Off	To switch off MHS, from any mode, as quickly as possible.	8.2
P900	FAULT Mode to POWER-ON Mode	To recover after MHS has detected an anomaly	8.3
P810	Processor Functions Self-test	To tests the core functions of the main processing unit	8.4
P811	TMTC Functions Self-test	To test the functionality of the Receiver relays	8.5
P812	Memory Self-test	To test the processor memory	8.6
P813	Fixed Pattern Self-test	To test the 1553 interfaces	8.7
P814	RDM Motor Scan Profile Self-test	To test the performance of the RDM Scan Control Function	8.8
P815	FDM Motor Scan Profile Self-test	To test the performance of the FDM Scan Control Function	8.9
P720	Read Memory	To verify the contents of memory (memory dump)	8.10
P721	Write Memory	To change the contents of memory (memory patch)	8.11
P400	Instrument Performance Checkout	To check the performance of the Instrument.	8.12

For a general description of Instrument self-testing and fault diagnosis refer to the Self-Test Mode description, section 4.1.1.6.

For a general description of Instrument fault handling, refer to the Fault Mode description, section 4.1.1.10.

Astrium Ltd owns the copyright of this document which is supplied in confidence and which shall not be used for any purpose other than that for which it is supplied and shall not in whole or in part be reproduced, copied, or communicated to any person without written permission from the owner.

8.2 Procedure P999 : Emergency Switch Off

8.2.1 Purpose

This procedure shall be used to switch the MHS Instrument off in an emergency situation.

The procedure commands MHS into a safe configuration. Power is then removed, irrespective of whether the safe condition has been achieved or not.

Note that MHS cannot be damaged by the removal of power in any mode of operation.

8.2.2 Constraints

Only to be used in an emergency. Normally, Instrument switch off should be achieved using the routine procedures described in section 7.

8.2.3 Initial Conditions

MHS may be in any mode of operation.

Astrium Ltd owns the copyright of this document which is supplied in confidence and which shall not be used for any purpose other than that for which it is supplied and shall not in whole or in part be reproduced, copied, or communicated to any person without written permission from the owner.

8.2.4 Procedure P999 : Emergency Switch Off

Step No.	Minimum time between Step (n) and Step (n-1)	Type of action	Action	Notes
1	n/a	Command	TC_STM(SAFEING)	Select Safeing Mode
2	8 seconds	Power Bus	Remove Main Bus Power Remove Pulse Load Bus Power If Survival Bus Power is off then Apply Survival Bus Power	Instrument switch-off
3	0 seconds	Verify S/C TLM	Main Bus Power < 0.1W Pulse Load Bus Power < 0.1W Survival Bus Power < 66W	0W typical 0W typical Depends on thermal environment
END				

Astrium Ltd owns the copyright of this document which is supplied in confidence and which shall not be used for any purpose other than that for which it is supplied and shall not in whole or in part be reproduced, copied, or communicated to any person without written permission from the owner.

8.3 Procedure P900 : FAULT Mode to POWER-ON Mode

8.3.1 Purpose

This procedure shall be used to switch MHS from Fault Mode to Power-on Mode. This is performed in order to recover to a nominal mode (ie Power-on) after the Instrument has detected an anomaly.

8.3.2 Constraints

The reason why MHS has autonomously entered Fault Mode must be fully understood and all necessary actions to ensure MHS will not be damaged must have been taken before switching back to Power-on Mode.

Authority to proceed must be obtained from Astrium Ltd.

8.3.3 Initial Conditions

The Instrument shall be in Fault Mode.

Astrium Ltd owns the copyright of this document which is supplied in confidence and which shall not be used for any purpose other than that for which it is supplied and shall not in whole or in part be reproduced, copied, or communicated to any person without written permission from the owner.

8.3.4 Procedure P900 : FAULT Mode to POWER-ON Mode

Step No.	Minimum time between Step (n) and Step (n-1)	Type of action	Action	Notes
1	n/a	Command	TC_STM(POWER-ON)	Select Power-On Mode
2	8 seconds	Command	TC_RHK	Request HK Packet
3	0.1 seconds	Verify MHS TLM	HK3:1=1 HK5=0 HK6(TM1:11)=0 HK6(TM2:1)=1 HK6(TM2:2)=1	Mode =Power-On Fault code = no faults or warnings Rx CV Off Rx Operational Heaters On SM Operational Heaters On
4	0 seconds	Verify MHS TLM	IF HK6(2:4)=1 THEN proceed to step 8	IF SPE/SCE is still on then skip to end.
5	2.667 seconds	Command	TC_SWC(TM2:4=1)	Switch on SPE/SCE
6	2.667 seconds	Command	TC_RHK	Request HK Packet
7	0.1 seconds	Verify MHS TLM	HK3:1=1 HK5=0 HK6(TM2:4)=1	Mode =Power-On Fault code = no faults or warnings SPE/SCE = On
8	0 seconds	Verify S/C TLM	Main Bus Power < 39W Pulse Load Bus Power < 33W	29W typical 27W typical
END				

Astrium Ltd owns the copyright of this document which is supplied in confidence and which shall not be used for any purpose other than that for which it is supplied and shall not in whole or in part be reproduced, copied, or communicated to any person without written permission from the owner.

8.4 Procedure P810 : Processor Functions Self-Test

8.4.1 Purpose

This procedure allows the results of the Processor Functions Self-Test to be inspected. This self-test is automatically performed when the MHS Instrument is switched on. The test verifies that core processor functions are working correctly (eg. CPU, EDAC, back-plane interface controller).

8.4.2 Constraints

It is expected that this procedure will be done as part of the in-flight commissioning and then as required as part of an Instrument Performance Checkout (P400).

8.4.3 Initial Conditions

The Instrument shall be in Power-on Mode.

Astrium Ltd owns the copyright of this document which is supplied in confidence and which shall not be used for any purpose other than that for which it is supplied and shall not in whole or in part be reproduced, copied, or communicated to any person without written permission from the owner.

8.4.4 Procedure P810 : Processor Functions Self-Test

Step No.	Minimum time between Step (n) and Step (n-1)	Type of action	Action	Notes
1	n/a	Command	TC_RHK	Request HK Packet
2	0.1 seconds	Verify MHS TLM	HK3:1=0 HK5=0	Mode =Power-on Fault code = no faults or warnings
3	2.667 seconds	Command	TC_LTD(ICT, 4, $FF, $00, $FF, $00)	Select Processor Functions Self-Test
4	2.667 seconds	Command	TC_RHK	Request HK Packet
5	0.1 seconds	Verify MHS TLM	HK4:7=2	TC Ack: Received Command Count=2
6	2.667 seconds	Command	TC_STM(Self-Test, PIE Functions, Repeat On)	Select Self-Test Mode
7	8 seconds	Command	TC_RHK	Request HK Packet (A Test Data Packet will be returned)
8	0.1 seconds	Verify MHS TLM	TD3:1=5 TD3:4=0 TD4 Octet 1 = $48 Octet 10 = $F8	Mode = Self-Test Self-Test Code = PIE Functions Processor Test Done and Passed All sub-tests have passed
9	2.667 seconds	Command	TC_STM(Power-On)	Select Power-on Mode
10	8 seconds	Command	TC_RHK	Request HK Packet
11	0.1 seconds	Verify MHS TLM	HK3:1=0 HK5=0	Mode =Power-on Fault code = no faults or warnings

Astrium Ltd owns the copyright of this document which is supplied in confidence and which shall not be used for any purpose other than that for which it is supplied and shall not in whole or in part be reproduced, copied, or communicated to any person without written permission from the owner.

8.5 Procedure P811 : TMTC Functions Self-Test

8.5.1 Purpose

This procedure performs a TMTC Functions Self-Test. This self-test verifies the operation of the Instrument relays. Each relay is toggled, and the status line verified for each relay state. If the Receiver DC/DC Converter is on, it is first switched off prior to operating the relays. This ensures the Receiver circuits are not switched on during the test. The test leaves the Receiver DC/DC Converter and all the relays in their initial state.

8.5.2 Constraints

It is expected that this procedure will be done as part of the in-flight commissioning and then as required as part of an Instrument Performance Checkout (P400).

The TMTC Functions Self-test must not be performed with the 'Repeat on' option selected (Set Mode Command parameter, see step 6 below) otherwise the relays will be toggled at about 1 Hz until a Set Mode(Power-on) command is received. This would risk prematurely aging the relays.

8.5.3 Initial Conditions

The Instrument shall be in Power-on Mode.

Astrium Ltd owns the copyright of this document which is supplied in confidence and which shall not be used for any purpose other than that for which it is supplied and shall not in whole or in part be reproduced, copied, or communicated to any person without written permission from the owner.

8.5.4 Procedure P811 : TMTC Functions Self-Test

Step No.	Minimum time between Step (n) and Step (n-1)	Type of action	Action	Notes
1	n/a	Command	TC_RHK	Request HK Packet
2	0.1 seconds	Verify MHS TLM	HK3:1=0 HK5=0	Mode =Power-on Fault code = no faults or warnings
3	2.667 seconds	Command	TC_LTD(ICT,4, $FF, $FF, $00, $00)	Select TMTC Functions Self-Test
4	2.667 seconds	Command	TC_RHK	Request HK Packet
5	0.1 seconds	Verify MHS TLM	HK4:7=2	TC Ack: Received Command Count=2
6	2.667 seconds	Command	TC_STM(Self-Test, PIE Functions, Repeat Off)	Select Self-Test Mode
7	5.333 seconds	Command	TC_RHK	Request HK Packet (A Test Data Packet will be returned)
8	0.1 seconds	Verify MHS TLM	TD3:1=5 TD3:4=0 TD4 Octet 1 = $24 Octet 11 = $FF Octet 12 = $FF Octet 13 = $F0	Mode = Self-Test Self-Test Code = PIE Functions TMTC Functions Test Done and Passed Relays Channels 1..8 passed Relays Channels 9..16 passed Relays Channels 17..20 passed
9	8 seconds	Command	TC_RHK	Request HK Packet
10	0.1 seconds	Verify MHS TLM	HK3:1=0 HK5=0	Mode =Power-on Fault code = no faults or warnings

Astrium Ltd owns the copyright of this document which is supplied in confidence and which shall not be used for any purpose other than that for which it is supplied and shall not in whole or in part be reproduced, copied, or communicated to any person without written permission from the owner.

8.6 Procedure P812 : Memory Self-Test

8.6.1 Purpose

This procedure allows the processor memory to be tested. A write-read-compare test is performed on each address in the address range. The test finishes with all memory locations containing their original value (ie non-destructive test).

8.6.2 Constraints

It is expected that this procedure will be done as part of the in-flight commissioning and as required as part of an Instrument Performance Checkout (P400).

The Memory Self-Test checks the area of memory defined by the Instrument Configuration Table (ICT5, 6, 7). The default area is the Scan Profile Table (see descriptions in under 8.11.2 and 4.2.3). Provided ICT5, 6, 7 have not been modified since power up, the procedure shown below is safe.

This procedure may be used with different memory start and end addresses. However, detailed knowledge of the MHS software memory map is required to ensure critical areas of the memory are not tested. *In this case, authority to proceed must be obtained from Astrium Ltd.*

8.6.3 Initial Conditions

The Instrument shall be in Power-on Mode.

Astrium Ltd owns the copyright of this document which is supplied in confidence and which shall not be used for any purpose other than that for which it is supplied and shall not in whole or in part be reproduced, copied, or communicated to any person without written permission from the owner.

8.6.4 Procedure P812 : Memory Self-Test

Step No.	Minimum time between Step (n) and Step (n-1)	Type of action	Action	Notes
1	n/a	Command	TC_RHK	Request HK Packet
2	0.1 seconds	Verify MHS TLM	HK3:1=0 HK5=0	Mode =Power-on Fault code = no faults or warnings
3	2.667 seconds	Command	TC_LTD(ICT,4, $00, $FF, $FF, $00)	Select Memory Self-Test
4	2.667 seconds	Command	TC_RHK	Request HK Packet
5	0.1 seconds	Verify MHS TLM	HK4:7=2	TC Ack: Received Command Count=2
6	2.667 seconds	Command	TC_STM(Self-Test, PIE Functions, Repeat On)	Select Self-Test Mode
7	8 seconds	Command	TC_RHK	Request HK Packet (A Test Data Packet will be returned)
8	0.1 seconds	Verify MHS TLM	TD3:1=5 TD3:4=0 TD4 Octet 1 = $90 Octets 8:9 = $00	Mode = Self-Test Self-Test Code = PIE Functions Memory Test Done and Passed Number of errors = 0
9	2.667 seconds	Command	TC_STM(Power-On)	Select Power-on Mode
10	8 seconds	Command	TC_RHK	Request HK Packet
11	0.1 seconds	Verify MHS TLM	HK3:1=0 HK5=0	Mode =Power-on Fault code = no faults or warnings

Astrium Ltd owns the copyright of this document which is supplied in confidence and which shall not be used for any purpose other than that for which it is supplied and shall not in whole or in part be reproduced, copied, or communicated to any person without written permission from the owner.

8.7 Procedure P813 : Fixed Pattern Self-Test

8.7.1 Purpose

This procedure causes a fixed binary pattern to be output in the Test Data Packet and Extended Test Data Packet and therefore allows the data interface medium (ie 1553 bus) to be tested.

8.7.2 Constraints

It is expected that this procedure will be done as part of the in-flight commissioning and as required as part of an Instrument Performance Checkout (P400).

8.7.3 Initial Conditions

The Instrument shall be in Power-on Mode.

Astrium Ltd owns the copyright of this document which is supplied in confidence and which shall not be used for any purpose other than that for which it is supplied and shall not in whole or in part be reproduced, copied, or communicated to any person without written permission from the owner.

8.7.4 Procedure P813 : Fixed Pattern Self-Test

Step No.	Minimum time between Step (n) and Step (n-1)	Type of action	Action	Notes
1	n/a	Command	TC_RHK	Request HK Packet
2	0.1 seconds	Verify MHS TLM	HK3:1=0 HK5=0	Mode =Power-on Fault code = no faults or warnings
6	2.667 seconds	Command	TC_STM(Self-Test, Fixed Pattern, Repeat On)	Select Self-Test Mode
7	8 seconds	Command	TC_RHK	Request HK Packet (A Test Data Packet will be returned)
8	0.1 seconds	Verify MHS TLM	TD3:1=5 TD3:4=1 TD4 Octets 1..15 = $55	Mode = Self-Test Self-Test Code = Fixed Pattern $55 = default fixed pattern
9	2.667 seconds	Command	SD_RSD	Request SD Packet (an Extended Test Packet will be returned)
10	0.1 seconds	Verify MHS TLM	ETP3:1=5 ETP3:4=1 ETP4 Octets 1..1247 = $55	Mode = Self-Test Self-Test Code = Fixed Pattern $55 = default fixed pattern
9	2.667 seconds	Command	TC_STM(Power-On)	Select Power-on Mode
10	8 seconds	Command	TC_RHK	Request HK Packet
11	0.1 seconds	Verify MHS TLM	HK3:1=0 HK5=0	Mode =Power-on Fault code = no faults or warnings

Astrium Ltd owns the copyright of this document which is supplied in confidence and which shall not be used for any purpose other than that for which it is supplied and shall not in whole or in part be reproduced, copied, or communicated to any person without written permission from the owner.

8.8 Procedure P814 : RDM Motor Scan Profile Self-Test

8.8.1 Purpose

This procedure shall be used to test the performance of the scan control function of the RDM.

The RDM and FDM will perform the nominal scan profile. The Instrument will record the scan control position data and the current demand data of the RDM and output them in Extended Test Data Packets. The position data enables the Scan Control Error to be assessed. The current demand data enables the control stability, the motor loading (eg. friction) and the motor power to be assessed.

8.8.2 Constraints

It is expected that this procedure will be done as part of the in-flight commissioning and as required as part of an Instrument Performance Checkout (P400).

8.8.3 Initial Conditions

The Instrument shall be in Standby Mode.

Astrium Ltd owns the copyright of this document which is supplied in confidence and which shall not be used for any purpose other than that for which it is supplied and shall not in whole or in part be reproduced, copied, or communicated to any person without written permission from the owner.

8.8.4 Procedure P814 : RDM Motor Scan Profile Self-Test

Step No.	Minimum time between Step (n) and Step (n-1)	Type of action	Action	Notes
1	n/a	Command	TC_RHK	Request HK Packet
2	0.1 seconds	Verify MHS TLM	HK3:1=2 HK5=0	Mode =Standby Fault code = no faults or warnings
3	2.667 seconds	Command	TC_LTD(ICT, 8, $F0, $00, $00, $0C)	Selects RDM motor test, profile 0, 16 bit position data, start count 0
4	0.1 seconds	Command	TC_RHK	Request HK Packet
5	0.1 seconds	Verify MHS TLM	HK4:7=2	TC Ack: Received Command Count=2
6	2.667 seconds	Command	TC_STM(Self-Test, Motor, Repeat On)	Select Motor Self-Test Mode
7	8 seconds	Command	TC_RHK	Request HK Packet (A Test Data Packet will be returned)
8	0.1 seconds	Verify MHS TLM	TD3:1=5 TD3:4=3	Mode = Self-Test Self-Test Code = Motor
9	2.667 seconds	Command	SD_RSD	Request SD Packet (an Extended Test Packet will be returned)
10	0.1 seconds	Verify MHS TLM	ETP3:1=5 ETP3:4=3 ETP4 Octet 1247 = $A0 Record Octets (1:2)...(1245:1246) Calculate, plot and verify Control Error.	Mode = Self-Test Self-Test Code = Motor Test ID Word = RDM 16 bit position data, Profile 0, Start Count 0. 16 bit position samples for SCC=0 to 622. For method, see section 8.8.5.
11	2.667 seconds	Command	TC_STM(Standby)	Select Standby Mode
12	8 seconds	Command	TC_RHK	Request HK Packet
13	0.1 seconds	Verify MHS TLM	HK3:1=2 HK5=0	Mode =Standby Fault code = no faults or warnings

Astrium Ltd owns the copyright of this document which is supplied in confidence and which shall not be used for any purpose other than that for which it is supplied and shall not in whole or in part be reproduced, copied, or communicated to any person without written permission from the owner.

Step No.	Minimum time between Step (n) and Step (n-1)	Type of action	Action	Notes
14	2.667 seconds	Command	TC_LTD(ICT,8, $F0, $02, $11, $0C)	Selects RDM motor test, profile 0, 16 bit position data, start count 529
15	0.1 seconds	Command	TC_RHK	Request HK Packet
16	0.1 seconds	Verify MHS TLM	HK4:7=2	TC Ack: Received Command Count=2
17	2.667 seconds	Command	TC_STM(Self-Test, Motor, Repeat On)	Select Motor Self-Test Mode
18	8 seconds	Command	TC_RHK	Request HK Packet (A Test Data Packet will be returned)
19	0.1 seconds	Verify MHS TLM	TD3:1=5 TD3:4=3	Mode = Self-Test Self-Test Code = Motor
20	2.667 seconds	Command	SD_RSD	Request SD Packet (an Extended Test Packet will be returned)
21	0.1 seconds	Verify MHS TLM	ETP3:1=5 ETP3:4=3 ETP4 Octet 1247 = $A2 Record Octets (1:2)...(1245:1246) Calculate, plot and verify Control Error.	Mode = Self-Test Self-Test Code = Motor Test ID Word = RDM 16 bit position data, Profile 0, Start Count 529. 16 bit position samples for SCC=529 to 1151. For method, see section 8.8.5.
22	2.667 seconds	Command	TC_STM(Standby)	Select Standby Mode
23	8 seconds	Command	TC_RHK	Request HK Packet
24	0.1 seconds	Verify MHS TLM	HK3:1=2 HK5=0	Mode =Standby Fault code = no faults or warnings
25	2.667 seconds	Command	TC_LTD(ICT, 8, $E0, $00, $00, $0C)	Selects RDM motor test, profile 0, current demand data
26	0.1 seconds	Command	TC_RHK	Request HK Packet
27	0.1 seconds	Verify MHS TLM	HK4:7=2	TC Ack: Received Command Count=2

Astrium Ltd owns the copyright of this document which is supplied in confidence and which shall not be used for any purpose other than that for which it is supplied and shall not in whole or in part be reproduced, copied, or communicated to any person without written permission from the owner.

Step No.	Minimum time between Step (n) and Step (n-1)	Type of action	Action	Notes
28	2.667 seconds	Command	TC_STM(Self-Test, Motor, Repeat On)	Select Motor Self-Test Mode
29	8 seconds	Command	TC_RHK	Request HK Packet (A Test Data Packet will be returned)
30	0.1 seconds	Verify MHS TLM	TD3:1=5 TD3:4=3	Mode = Self-Test Self-Test Code = Motor
31	2.667 seconds	Command	SD_RSD	Request SD Packet (an Extended Test Packet will be returned)
32	0.1 seconds	Verify MHS TLM	ETP3:1=5 ETP3:4=3 ETP4 Octet 1247 = $20 Record Octets 1...1152 Calculate and plot current demand. Compare against nominal current demand plot (Figure 8.8.4-1)	Mode = Self-Test Self-Test Code = Motor Test ID Word = RDM current demand data, Profile 0. 8 bit current demand samples for SCC=0 to 1151. Note: 1 LSB = 0.0051 amps
END				

Astrium Ltd owns the copyright of this document which is supplied in confidence and which shall not be used for any purpose other than that for which it is supplied and shall not in whole or in part be reproduced, copied, or communicated to any person without written permission from the owner.

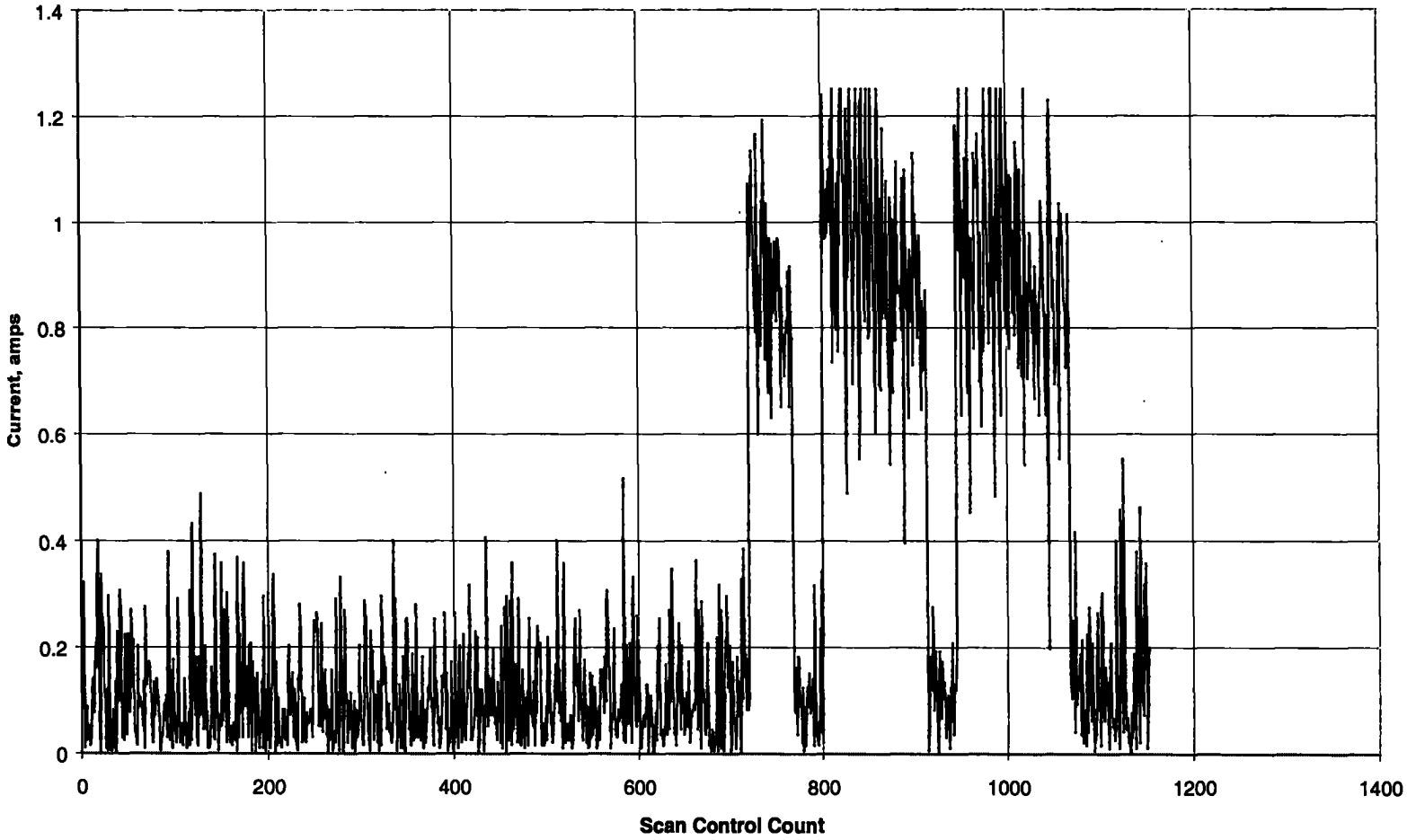

Figure 8.8.4-1 Nominal Current Demand Plot

Astrium Ltd owns the copyright of this document which is supplied in confidence and which shall not be used for any purpose other than that for which it is supplied and shall not in whole or in part be reproduced, copied, or communicated to any person without written permission from the owner.

8.8.5 Scan Control Error Calculation and Verification

To calculate Control Error:-

Control Error(SCC) = Ideal position(SCC) - Measured Position(SCC)

For pixels P=1..90 (Earth View) then

$$Pixel_Mean_Control_Error(P) = \frac{1}{9}\sum_{i=0}^{8} Control_Error((P-1)*8+i)$$

To determine Measured Position:-

If packet Start Count = 0 (ie Steps 10) then
Measured Position (0) = { Octet(1) * 256 + Octet(2) } * 7.2 / 1024 degrees
Measured Position (n) = { Octet(n*2+1) * 256 + Octet(n*2+2) } * 7.2 / 1024 degrees

If packet Start Count = 529 (ie Step 21) then
Measured Position (529) = { Octet(1) * 256 + Octet(2) } * 7.2 / 1024 degrees
Measured Position (n+529) = { Octet(n*2+1) * 256 + Octet(n*2+2) } * 7.2 / 1024 degrees

To determine Ideal Position:-

For SCC = 0 to 720 then
Ideal position (n) = 130 + n * 60/432 degrees

For SCC=768 to 800 then (Profile 0 only)
Ideal position (n) = 251.377778 + (n-768) * 60/432 degrees

For SCC=912 to 944 then
Ideal position (n) = 357.777778 + (n-912) * 60/432 degrees (modulus 360 degrees)

Astrium Ltd owns the copyright of this document which is supplied in confidence and which shall not be used for any purpose other than that for which it is supplied and shall not in whole or in part be reproduced, copied, or communicated to any person without written permission from the owner.

To verify Scan Control Performance:-

If packet Start Count = 0 (ie Step 10) then
Verify Pixel Mean Control Error(0..77) < ± 0.08°

If packet Start Count = 529 (ie Step 21) then
Verify Pixel Mean Control Error(67..90) < ±0.08°
Verify Control Error(768..800) < ±0.30°
Verify Control Error(912..944) < ±0.30°

Astrium Ltd owns the copyright of this document which is supplied in confidence and which shall not be used for any purpose other than that for which it is supplied and shall not in whole or in part be reproduced, copied, or communicated to any person without written permission from the owner.

8.9 Procedure P815 : FDM Motor Scan Profile Self-Test

8.9.1 Purpose

This procedure shall be used to test the performance of the scan control function of the FDM.

The RDM and FDM will perform the nominal scan profile. The Instrument will record the scan control position data and the current demand data of the FDM and output them in Extended Test Data Packets. The position data enables the Scan Control Error to be assessed. The current demand data enables the control stability, the motor loading (eg. friction) and the motor power to be assessed.

8.9.2 Constraints

It is expected that this procedure will be done as part of the in-flight commissioning and as required as part of an Instrument Performance Checkout (P400).

8.9.3 Initial Conditions

The Instrument shall be in Standby Mode.

Astrium Ltd owns the copyright of this document which is supplied in confidence and which shall not be used for any purpose other than that for which it is supplied and shall not in whole or in part be reproduced, copied, or communicated to any person without written permission from the owner.

8.9.4 Procedure P815 : FDM Motor Scan Profile Self-Test

Step No.	Minimum time between Step (n) and Step (n-1)	Type of action	Action	Notes
1	n/a	Command	TC_RHK	Request HK Packet
2	0.1 seconds	Verify MHS TLM	HK3:1=2 HK5=0	Mode =Standby Fault code = no faults or warnings
3	2.667 seconds	Command	TC_LTD(ICT, 8, $D0, $00, $00, $0C)	Selects FDM motor test, profile 0, 16 bit position data, start count 0
4	0.1 seconds	Command	TC_RHK	Request HK Packet
5	0.1 seconds	Verify MHS TLM	HK4:7=2	TC Ack: Received Command Count=2
6	2.667 seconds	Command	TC_STM(Self-Test, Motor, Repeat On)	Select Motor Self-Test Mode
7	8 seconds	Command	TC_RHK	Request HK Packet (A Test Data Packet will be returned)
8	0.1 seconds	Verify MHS TLM	TD3:1=5 TD3:4=3	Mode = Self-Test Self-Test Code = Motor
9	2.667 seconds	Command	SD_RSD	Request SD Packet (an Extended Test Packet will be returned)
10	0.1 seconds	Verify MHS TLM	ETP3:1=5 ETP3:4=3 ETP4 Octet 1247 = $80 Record Octets (1:2)...(1245:1246) Calculate, plot and verify Control Error.	Mode = Self-Test Self-Test Code = Motor Test ID Word = FDM 16 bit position data, Profile 0, Start Count 0. 16 bit position samples for SCC=0 to 622. For method, see section 8.8.5
11	2.667 seconds	Command	TC_STM(Standby)	Select Standby Mode
12	8 seconds	Command	TC_RHK	Request HK Packet
13	0.1 seconds	Verify MHS TLM	HK3:1=2 HK5=0	Mode =Standby Fault code = no faults or warnings

Astrium Ltd owns the copyright of this document which is supplied in confidence and which shall not be used for any purpose other than that for which it is supplied and shall not in whole or in part be reproduced, copied, or communicated to any person without written permission from the owner.

Step No.	Minimum time between Step (n) and Step (n-1)	Type of action	Action	Notes
14	2.667 seconds	Command	TC_LTD(ICT,8, $D0, $02, $11, $0C)	Selects FDM motor test, profile 0, 16 bit position data, start count 529
15	0.1 seconds	Command	TC_RHK	Request HK Packet
16	0.1 seconds	Verify MHS TLM	HK4:7=2	TC Ack: Received Command Count=2
17	2.667 seconds	Command	TC_STM(Self-Test, Motor, Repeat On)	Select Motor Self-Test Mode
18	8 seconds	Command	TC_RHK	Request HK Packet (A Test Data Packet will be returned)
19	0.1 seconds	Verify MHS TLM	TD3:1=5 TD3:4=3	Mode = Self-Test Self-Test Code = Motor
20	2.667 seconds	Command	SD_RSD	Request SD Packet (an Extended Test Packet will be returned)
21	0.1 seconds	Verify MHS TLM	ETP3:1=5 ETP3:4=3 ETP4 Octet 1247 = $82 Record Octets (1:2)...(1245:1246) Calculate, plot and verify Control Error.	Mode = Self-Test Self-Test Code = Motor Test ID Word = FDM 16 bit position data, Profile 0, Start Count 529. 16 bit position samples for SCC=529 to 1151. For method, see section 8.8.5
22	2.667 seconds	Command	TC_STM(Standby)	Select Standby Mode
23	8 seconds	Command	TC_RHK	Request HK Packet
24	0.1 seconds	Verify MHS TLM	HK3:1=2 HK5=0	Mode =Standby Fault code = no faults or warnings
25	2.667 seconds	Command	TC_LTD(ICT, 8, $C0, $00, $00, $0C)	Selects FDM motor test, profile 0, current demand data
26	0.1 seconds	Command	TC_RHK	Request HK Packet
27	0.1 seconds	Verify MHS TLM	HK4:7=2	TC Ack: Received Command Count=2
28	2.667 seconds	Command	TC_STM(Self-Test, Motor, Repeat On)	Select Motor Self-Test Mode

Astrium Ltd owns the copyright of this document which is supplied in confidence and which shall not be used for any purpose other than that for which it is supplied and shall not in whole or in part be reproduced, copied, or communicated to any person without written permission from the owner.

Step No.	Minimum time between Step (n) and Step (n-1)	Type of action	Action	Notes
29	8 seconds	Command	TC_RHK	Request HK Packet (A Test Data Packet will be returned)
30	0.1 seconds	Verify MHS TLM	TD3:1=5 TD3:4=3	Mode = Self-Test Self-Test Code = Motor
31	2.667 seconds	Command	SD_RSD	Request SD Packet (an Extended Test Packet will be returned)
32	0.1 seconds	Verify MHS TLM	ETP3:1=5 ETP3:4=3 ETP4 Octet 1247 = $00 Record Octets 1...1152 Calculate and plot current demand. Compare against nominal current demand plot (Figure 8.8.4-1, ie same as RDM)	Mode = Self-Test Self-Test Code = Motor Test ID Word = FDM current demand data, Profile 0. 8 bit current demand samples for SCC=0 to 1151. Note: 1 LSB = 0.0051 amps
END				

Astrium Ltd owns the copyright of this document which is supplied in confidence and which shall not be used for any purpose other than that for which it is supplied and shall not in whole or in part be reproduced, copied, or communicated to any person without written permission from the owner.

8.10 Procedure P720 : Read Memory

8.10.1 Purpose

This procedure shall be used to read the contents of the processor memory.

8.10.2 Constraints

The relevance of the contents of processor memory require a detailed understanding of the MHS software and knowledge of the memory map. Therefore this procedure is only envisaged to be used for advanced diagnostic activities.

Authority to proceed must be obtained from Astrium Ltd.

8.10.3 Initial Conditions

The Instrument shall be in Power-on Mode.

Astrium Ltd owns the copyright of this document which is supplied in confidence and which shall not be used for any purpose other than that for which it is supplied and shall not in whole or in part be reproduced, copied, or communicated to any person without written permission from the owner.

8.10.4 Procedure P720 : Read Memory

Step No.	Minimum time between Step (n) and Step (n-1)	Type of action	Action	Notes
1	2.667 seconds	Command	TC_RMD(start address)	Request Memory Data Packet
2	0.1 seconds	Verify MHS MDP	MP3:1=$F MP4:1=start address MP4:2=data	Packet = Memory Data Packet Verify start address Verify the data corresponds to the baseline software (ie. PROM contents).
3			Repeat steps 1 and 2 until all the required memory areas have been read.	
END				

Astrium Ltd owns the copyright of this document which is supplied in confidence and which shall not be used for any purpose other than that for which it is supplied and shall not in whole or in part be reproduced, copied, or communicated to any person without written permission from the owner.

8.11 Procedure P721 : Write Memory

8.11.1 Purpose

This procedure shall be used to change the contents of the processor memory. This may be required in order to patch some new program code or to change the value of a software constant.

The change is made to the RAM contents only. The PROM contents cannot be changed. An MHS power off will cause all memory patches to be lost.

The procedure first verifies the existing contents of memory. This serves as an additional verification that the correct area of memory is being patched. Then the contents are modified. Finally, the memory is read to verify that the memory has been successfully written to.

8.11.2 Constraints

Software patches must be performed with extreme caution. Any software patches must be fully analysed and tested on ground before doing in-flight patches. The patch must be performed with MHS in a minimum operational mode (ie. Power-on Mode) so that a minimum of software functions are being performed. After the patch has been performed, the MHS must be exercised in such a way so as to verify the correct functionality of the patched program code.

The procedure below is an example of a memory write which is safe to perform in Power-on Mode. It modifies the first 4 words of the Scan Profile Table (see section 4.2.3. The Scan Profile Table occupies $013004 to $014683; this procedure modifies addresses $013004 to $013007). This Table defines the position versus time profile of the Scan Mechanism and is only used during Scan Mode. It is initialised each time a Warm-up Mode to Standby Mode transition is made, so modifications made in Power-on Mode are overwritten before the table is used.

The procedure defined below may be performed provided the start address is in the range $013004 to $01467F. The data written may be any value. For any other start address values, *authority to proceed must be obtained from Astrium Ltd.*

8.11.3 Initial Conditions

The Instrument shall be in Power-on Mode.

Astrium Ltd owns the copyright of this document which is supplied in confidence and which shall not be used for any purpose other than that for which it is supplied and shall not in whole or in part be reproduced, copied, or communicated to any person without written permission from the owner.

8.11.4 Procedure P721 : Write Memory

Step No.	Minimum time between Step (n) and Step (n-1)	Type of action	Action	Notes
1	2.667 seconds	Command	TC_RMD($013003)	Request Memory Data Packet (start address=$013004)
2	0.1 seconds	Verify MHS MDP	MP3:1=$F MP4:1=$013004 MP4:2=data	Packet = Memory Data Packet Verify start address Verify the data corresponds to the baseline software (ie. PROM contents).
3	2.667 seconds	Command	TC_LDM($013004, $AAAA, $5555, $0000, $FFFF)	Load 4 words of data: start address=$013004
4	1 second	Command	TC_RMD($013003)	Request Memory Data Packet (start address=$013004)
5	0.1 seconds	Verify MHS MDP	MP3:1=$F MP4:1=$013004 MP4:2=data	Packet = Memory Data Packet Verify start address Verify the data corresponds to the data loaded.
6			Repeat steps 1 to 5 until all the required memory areas have been modified.	
END				

Astrium Ltd owns the copyright of this document which is supplied in confidence and which shall not be used for any purpose other than that for which it is supplied and shall not in whole or in part be reproduced, copied, or communicated to any person without written permission from the owner.

8.12 Procedure P400 : Instrument Performance Checkout

8.12.1 Purpose

This procedure shall be used as required to check the performance and functionality of the MHS Instrument.

8.12.2 Constraints

None.

8.12.3 Initial Conditions

The Instrument shall be in Standby Mode.

Astrium Ltd owns the copyright of this document which is supplied in confidence and which shall not be used for any purpose other than that for which it is supplied and shall not in whole or in part be reproduced, copied, or communicated to any person without written permission from the owner.

8.12.4 Procedure P400 : Routine Performance Checkout

Step No.	Minimum time between Step (n) and Step (n-1)	Type of action	Action	Notes
1	n/a	Command	TC_RHK	Request HK Packet
2	0.1 seconds	Verify MHS TLM	HK3:1=2	Mode =Standby
3	0 seconds	Procedure	If checkout required do P216	Standby to Power-on Mode
4	0 seconds	Procedure	If checkout required do P810	Processor Functions Self-test
5	0 seconds	Procedure	If checkout required do P812	Memory Self-test
6	0 seconds	Procedure	If checkout required do P813	Fixed Pattern Self-test
7	0 seconds	Procedure	If checkout required do P814	RDM Motor Scan Profile Self-test
8	0 seconds	Procedure	If checkout required do P815	FDM Motor Scan Profile Self-test
9	0 seconds	Procedure	If required do P330	Rx Gains and DC offsets Optimisation
10	0 seconds	Procedure	If required do P410	Generate Status Report
END				

Astrium Ltd owns the copyright of this document which is supplied in confidence and which shall not be used for any purpose other than that for which it is supplied and shall not in whole or in part be reproduced, copied, or communicated to any person without written permission from the owner.

APPENDICES

Command/Telemetry Diagrams

APPENDIX A1 : Rx Power Switching and LO Redundancy
APPENDIX A2 : Rx Gain, DC Offset and SPE Redundancy
APPENDIX A3 : Scan Control
APPENDIX A4 : Power Distribution
APPENDIX A5 : Temperature Telemetry

Astrium Ltd owns the copyright of this document which is supplied in confidence and which shall not be used for any purpose other than that for which it is supplied and shall not in whole or in part be reproduced, copied, or communicated to any person without written permission from the owner.

Astrium Ltd owns the copyright of this document which is supplied in confidence and which shall not be used for any purpose other than that for which it is supplied and shall not in whole or in part be reproduced, copied, or communicated to any person without written permission from the owner.

Astrium Ltd owns the copyright of this document which is supplied in confidence and which shall not be used for any purpose other than that for which it is supplied and shall not in whole or in part be reproduced, copied, or communicated to any person without written permission from the owner.

Astrium Ltd owns the copyright of this document which is supplied in confidence and which shall not be used for any purpose other than that for which it is supplied and shall not in whole or in part be reproduced, copied, or communicated to any person without written permission from the owner.

Astrium Ltd owns the copyright of this document which is supplied in confidence and which shall not be used for any purpose other than that for which it is supplied and shall not in whole or in part be reproduced, copied, or communicated to any person without written permission from the owner.

Astrium Ltd owns the copyright of this document which is supplied in confidence and which shall not be used for any purpose other than that for which it is supplied and shall not in whole or in part be reproduced, copied, or communicated to any person without written permission from the owner.

DOCUMENT CHANGE DETAILS

ISSUE	CHANGE AUTHORITY	CLASS	RELEVANT INFORMATION/INSTRUCTIONS
1	EO 3175-01374	-	First Issue
2	EO 3175-01849	II	Up-issue incorporating additions requested by EUMETSAT at meeting MHS-MN-MMS-0071/98:- • Reformat and re-order sections • Add nominal procedures • Add special procedures • Add commissioning procedures • Add routine test procedures • Add long term monitoring procedures • Add time information to procedures • Add command/telemetry handling description • Add unique identifiers for all commands and telemetry • Add command/telemetry diagrams • Add command verification data • Add telemetry timing information • Add power consumption data • Add software description
3	EO 3175-02038	II	• Addition of EM, FM3 and FM4 initialisation procedures • Change to Astrium document format
4	EO 3175-	II	All changes are shown ***in bold italics*** and have change bars in the margin. Up-issue incorporating comments from EUMETSAT at teleconference MHS-EOS-MN-0074/01, 14/3/2001. Summary of changes:- • §3.2: description modified • §4.1.6: HK Data field changed to 'undefined' • §4.3: DAC lsb=1670 ADC lsbs for FMs added • Table 5.3-1: SCT12, SCT14 values for EM changed • §6.4: Main Bus Status polarity definition changed • Table 6.6.3.3.1-2: notes added; PRT channels added • Table 6.8.4-1: TM4:13 & 14 names changed • §7.1: Reference to P217 changed to P201; comment about command retries added; P400 moved to §8; P410 added • §7.2.1: 'routine' removed • §7.3.2: 'eg. during commissioning' added • §7.3.4: references to P010 and P013 changed to P210 and P213 respectively • §7.14.4: steps 15 and 21: SCT values changed • §7.23.2: 'as required' added • §7.23.3: 'or Scan Mode' added • §7.23.4: procedure modified to allow off-line calculations • §7.23.5: references to P041 and P040 changed to P331 and P330 respectively • §7.23.6: DC Offset calculation method changed to accommodate gain change at same time • §7.25: Procedure changed • §8.1: P400 moved from §7 • §8.4/5/6/7/8/9.2: 'as required....' added • §8.5.2: Paragraph added about 'repeat on' • §8.5.2: Paragraph added about memory test areas • §8.9.4: Step 32: $80 changed to $00 • §8.11.2: Safe memory patch area defined • §8.11.4: Safe memory patch area defined • §8.12.1: 'as required' added • §8.12.3: Scan Mode changed to Standby Mode

Astrium Ltd owns the copyright of this document which is supplied in confidence and which shall not be used for any purpose other than that for which it is supplied and shall not in whole or in part be reproduced, copied, or communicated to any person without written permission from the owner.

5	EO 3175-	II	All changes are shown ***in bold italics*** and have change bars in the margin. • Table 4.1-1. Note 8: RFCV stays on after Standby to Power-on Mode transition • Table 5.3-1. Column added for FM5. Values TBD. • Section 7.13: RFCV remains on. • Section 7.26: "FFFF" data in Motor Self Test Packets • Section 8.8.4: Calibration target scan control error limits changed from 0.25° to 0.30° • Section 7.1 and 7.19: Procedure P305 inserted (Timecode Patch) • Section 7.7: Timecode Patch procedure called up as part of OFF to Power-on procedure

Astrium Ltd owns the copyright of this document which is supplied in confidence and which shall not be used for any purpose other than that for which it is supplied and shall not in whole or in part be reproduced, copied, or communicated to any person without written permission from the owner.

DISTRIBUTION LIST

INTERNAL

I Stewart (front sheet only)
C Bushell
G Sykes
L Burton (front sheet only)
C Williams

EXTERNAL

G Mason (EUMETSAT)

Astrium Ltd owns the copyright of this document which is supplied in confidence and which shall not be used for any purpose other than that for which it is supplied and shall not in whole or in part be reproduced, copied, or communicated to any person without written permission from the owner.